Low-Voltage CMOS Octal Transparent Latch Flow Through Pinout

With 5 V-Tolerant Inputs and Outputs (3-State, Non-Inverting)

MC74LCX573

The MC74LCX573 is a high performance, non-inverting octal transparent latch operating from a 1.65 to 5.5 V supply. High impedance TTL compatible inputs significantly reduce current loading to input drivers while TTL compatible outputs offer improved switching noise performance. A V_I specification of 5.5 V allows MC74LCX573 inputs to be safely driven from 5.0 V devices.

The MC74LCX573 contains 8 D-type latches with 3-state standard outputs. When the Latch Enable (LE) input is HIGH, data on the Dn inputs enters the latches. In this condition, the latches are transparent, i.e., a latch output will change state each time its D input changes. When LE is LOW, the latches store the information that was present on the D inputs a setup time preceding the HIGH-to-LOW transition of LE. The 3-state standard outputs are controlled by the Output Enable ($\overline{OE}$) input. When $\overline{OE}$ is LOW, the standard outputs are enabled. When $\overline{OE}$ is HIGH, the standard outputs are in the high impedance state, but this does not interfere with new data entering into the latches. The LCX573 flow through design facilitates easy PC board layout.

Features

- Designed for 1.65 to 5.5 V V_{CC} Operation
- 5.0 V Tolerant – Interface Capability With 5.0 V TTL Logic
- Supports Live Insertion and Withdrawal
- I_{OFF} Specification Guarantees High Impedance When V_{CC} = 0 V
- LVTTL Compatible
- LVCMOS Compatible
- 24 mA Balanced Output Sink and Source Capability at 3 V
- Near Zero Static Supply Current in All Three Logic States (10 μA) Substantially Reduces System Power Requirements
- Latchup Performance Exceeds 100 mA
- ESD Performance:
  - Human Body Model >2000 V
- -Q Suffix for Automotive and Other Applications Requiring Unique Site and Control Change Requirements; AEC-Q100 Qualified and PPAP Capable
- These Devices are Pb-Free, Halogen Free/BFR Free and are RoHS Compliant

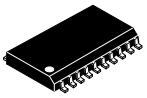

SOIC-20 WB
DW SUFFIX
CASE 751D

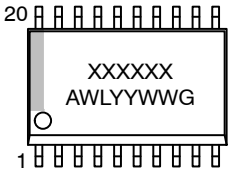

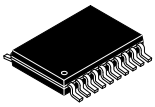

TSSOP-20
DT SUFFIX
CASE 948E

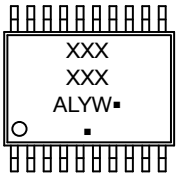

A	=	Assembly Location
L, WL	=	Wafer Lot
Y, YY	=	Year
W, WW	=	Work Week
G or ▪	=	Pb-Free Package

(Note: Microdot may be in either location)

ORDERING INFORMATION

See detailed ordering and shipping information on page 8 of this data sheet.

NOTE: Some of the devices on this data sheet have been **DISCONTINUED**. Please refer to the table on page 8.

© Semiconductor Components Industries, LLC, 2013

Downloaded from Arrow.com.

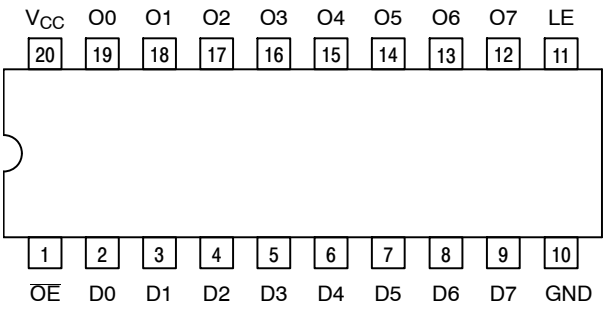

Figure 1. Pinout (Top View)

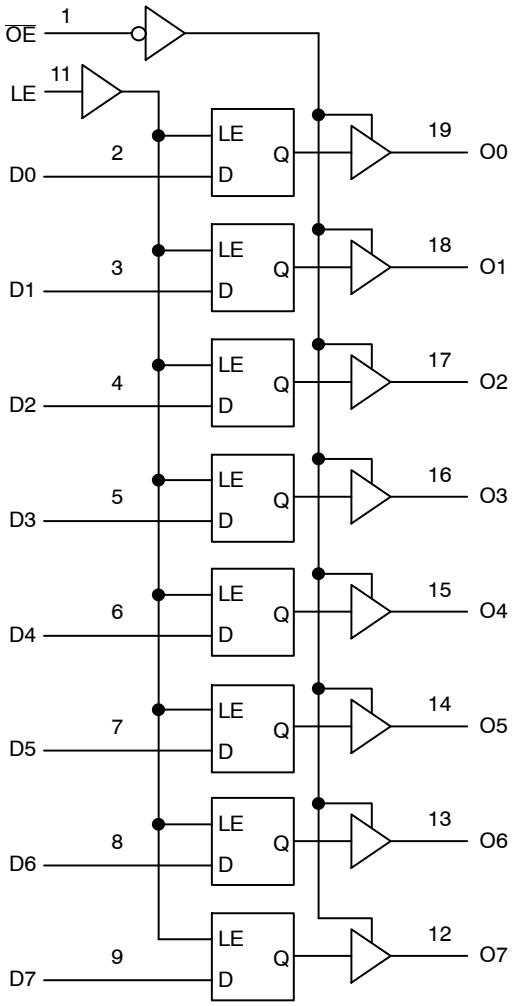

Figure 2. Logic Diagram

PIN NAMES

Pins	Function
$\overline{OE}$ LE D0–D7 O0–O7	Output Enable Input Latch Enable Input Data Inputs 3-State Latch Outputs

TRUTH TABLE

Inputs			Outputs	Operating Mode
$\overline{OE}$	LE	Dn	On	
L L	H H	H L	H L	Transparent (Latch Disabled); Read Latch
L L	L L	h l	H L	Latched (Latch Enabled) Read Latch
L	L	X	NC	Hold; Read Latch
H	L	X	Z	Hold; Disabled Outputs
H H	H H	H L	Z Z	Transparent (Latch Disabled); Disabled Outputs
H H	L L	h l	Z Z	Latched (Latch Enabled); Disabled Outputs

H = High Voltage Level;
h = High Voltage Level One Setup Time Prior to the Latch Enable High-to-Low Transition
L = Low Voltage Level
l = Low Voltage Level One Setup Time Prior to the Latch Enable High-to-Low Transition
NC = No Change, State Prior to the Latch Enable High-to-Low Transition
X = High or Low Voltage Level or Transitions are Acceptable
Z = High Impedance State
For I_{CC} Reasons DO NOT FLOAT Inputs

Share Feedback
Your Opinion Matters

Downloaded from Arrow.com.

MAXIMUM RATINGS

Symbol	Parameter		Value	Unit
V_{CC}	DC Supply Voltage		−0.5 to +6.5	V
V_I	DC Input Voltage (Note 1)		−0.5 to +6.5	V
V_O	DC Output Voltage (Note 1)	Active-Mode (High or Low State)	−0.5 to V_{CC} + 0.5	V
		Tri-State Mode	−0.5 to +6.5	
		Power-Down Mode (V_{CC} = 0 V)	−0.5 to +6.5	
I_{IK}	DC Input Diode Current	V_{IN} < GND	−50	mA
I_{OK}	DC Output Diode Current	V_{OUT} < GND	−50	mA
I_O	DC Output Source/Sink Current		±50	mA
I_{CC} or I_{GND}	DC Supply Current per Supply Pin or Ground Pin		±100	mA
T_{STG}	Storage Temperature Range		−65 to +150	°C
T_L	Lead Temperature, 1 mm from Case for 10 secs		260	°C
T_J	Junction Temperature Under Bias		+150	°C
θ_{JA}	Thermal Resistance (Note 2)	SOIC-20W	96	°C/W
		WQFN20	99	
		QFN20	111	
		TSSOP-20	150	
P_D	Power Dissipation in Still Air	SOIC-20W	1302	mW
		WQFN20	1256	
		QFN20	1127	
		TSSOP-20	833	
MSL	Moisture Sensitivity	SOIC-20W All Other Packages	Level 3 Level 1	–
F_R	Flammability Rating	Oxygen Index: 28 to 34	UL 94 V-0 @ 0.125 in	–
V_{ESD}	ESD Withstand Voltage (Note 3)	Human Body Model Charged Device Model	> 2000 N/A	V

Stresses exceeding those listed in the Maximum Ratings table may damage the device. If any of these limits are exceeded, device functionality should not be assumed, damage may occur and reliability may be affected.

1. I_O absolute maximum rating must be observed.
2. Measured with minimum pad spacing on an FR4 board, using 76 mm-by-114 mm, 2-ounce copper trace no air flow per JESD51-7.
3. HBM tested to EIA / JESD22-A114-A. CDM tested to JESD22-C101-A. JEDEC recommends that ESD qualification to EIA/JESD22-A115A (Machine Model) be discontinued.

Share Feedback
Your Opinion Matters

Downloaded from Arrow.com.

RECOMMENDED OPERATING CONDITIONS

Symbol	Parameter		Min	Typ	Max	Unit
V_{CC}	Supply Voltage	Operating	1.65	3.3	5.5	V
		Data Retention Only	1.5	3.3	5.5	
V_I	Digital Input Voltage		0	–	5.5	V
V_O	Output Voltage	Active Mode (High or Low State)	0	–	V_{CC}	V
		Tri-State Mode	0	–	5.5	
		Power Down Mode (V_{CC} = 0 V)	0	–	5.5	
T_A	Operating Free-Air Temperature		–55	–	+125	°C
t_r, t_f	Input Rise or Fall Rate	V_{CC} = 1.65 V to 1.95 V	0	–	20	nS/V
		V_{CC} = 2.3 V to 2.7 V	0	–	20	
		V_I from 0.8 V to 2.0 V, V_{CC} = 3.0 V	0	–	10	
		V_{CC} = 4.5 V to 5.5 V	0	–	5	

Functional operation above the stresses listed in the Recommended Operating Ranges is not implied. Extended exposure to stresses beyond the Recommended Operating Ranges limits may affect device reliability.

4. Unused inputs must always be tied to an appropriate logic voltage level (e.g., either GND or V_{CC}). Unused outputs must be left open.

DC ELECTRICAL CHARACTERISTICS

Symbol	Parameter	Conditions	V_{CC} (V)	T_A = –40 °C to +85 °C		T_A = –55 °C to +125 °C		Unit
				Min	Max	Min	Max	
V_{IH}	High-Level Input Voltage		1.65 to 1.95	0.65 x V_{CC}		0.65 x V_{CC}		V
			2.3 to 2.7	1.7		1.7		
			2.7 to 3.6	2.0		2.0		
			4.5 to 5.5	0.7 x V_{CC}		0.7 x V_{CC}		
V_{IL}	Low-Level Input Voltage		1.65 to 1.95		0.35 x V_{CC}		0.35 x V_{CC}	V
			2.3 to 2.7		0.7		0.7	
			2.7 to 3.6		0.8		0.8	
			4.5 to 5.5		0.3 x V_{CC}		0.3 x V_{CC}	
V_{OH}	High-Level Output Voltage	V_I = V_{IH} or V_{IL}						V
		I_{OH} = –100 μA	1.65 to 5.5	V_{CC} – 0.1	–	V_{CC} – 0.1	–	
		I_{OH} = –4 mA	1.65	1.2	–	1.2	–	
		I_{OH} = –8 mA	2.3	1.8	–	1.8	–	
		I_{OH} = –12 mA	2.7	2.2	–	2.2	–	
		I_{OH} = –16 mA	3.0	2.4	–	2.4	–	
		I_{OH} = –24 mA	3.0	2.2	–	2.2	–	
		I_{OH} = –32 mA	4.5	3.8		3.8		
V_{OL}	Low-Level Output Voltage	V_I = V_{IH} or V_{IL}						V
		I_{OL} = 100 μA	1.65 to 5.5	–	0.1	–	0.1	
		I_{OL} = 4 mA	1.65	–	0.45	–	0.45	
		I_{OL} = 8 mA	2.3	–	0.6	–	0.6	
		I_{OL} = 12 mA	2.7	–	0.4	–	0.4	
		I_{OL} = 16 mA	3.0	–	0.4	–	0.4	
		I_{OL} = 24 mA	3.0	–	0.55	–	0.55	
		I_{OL} = 32 mA	4.5		0.6		0.6	
I_I	Input Leakage Current	V_I = 0 to 5.5 V	3.6	–	±5.0	–	±5.0	μA

Share Feedback
Your Opinion Matters

Downloaded from Arrow.com.

DC ELECTRICAL CHARACTERISTICS

Symbol	Parameter	Conditions	V_{CC} (V)	T_A = −40 °C to +85 °C		T_A = −55 °C to +125 °C		Unit
				Min	Max	Min	Max	
I_{OZ}	3-State Output Leakage Current	$V_I = V_{IH}$ or V_{IL}, V_O = 0 V to 5.5 V	3.6	–	±5.0	–	±5.0	μA
I_{OFF}	Power Off Leakage Current	V_I = 5.5 V or V_O = 5.5 V	0	–	10	–	10	μA
I_{CC}	Quiescent Supply Current	V_I = 5.5 V or GND	3.6	–	10	–	10	μA
ΔI_{CC}	Increase in I_{CC} per Input	$V_{IH} = V_{CC} - 0.6$ V	2.3 to 3.6	–	500	–	500	μA

Product parametric performance is indicated in the Electrical Characteristics for the listed test conditions, unless otherwise noted. Product performance may not be indicated by the Electrical Characteristics if operated under different conditions.

5. These values of V_I are used to test DC electrical characteristics only.

AC ELECTRICAL CHARACTERISTICS

Symbol	Parameter	Test Condition	V_{CC} (V)	T_A = −40 °C to +85 °C		T_A = −55 °C to +125 °C		Unit
				Min	Max	Min	Max	
t_{PLH}, t_{PHL}	Propagation Delay, Dn to On	Waveform 1	1.65 to 1.95	–	14.0	–	14.0	ns
			2.3 to 2.7	–	9.6	–	9.6	
			2.7	–	9.0	–	9.0	
			3.0 to 3.6	–	8.0	–	8.0	
			4.5 to 5.5	–	5.5	–	5.5	
t_{PLH}, t_{PHL}	Propagation Delay, LE to On	Waveform 3	1.65 to 1.95	–	15.0	–	15.0	ns
			2.3 to 2.7	–	10.5	–	10.5	
			2.7	–	9.5	–	9.5	
			3.0 to 3.6	–	8.5	–	8.5	
			4.5 to 5.5	–	6.0	–	6.0	
t_{PZH}, t_{PZL}	Output Enable Time, to On	Waveform 2	1.65 to 1.95	–	15.0	–	15.0	ns
			2.3 to 2.7	–	10.5	–	10.5	
			2.7	–	9.5	–	9.5	
			3.0 to 3.6	–	8.5	–	8.5	
			4.5 to 5.5	–	6.0	–	6.0	
t_{PHZ}, t_{PLZ}	Output Enable Time, to On	Waveform 2	1.65 to 1.95	–	10.0	–	10.0	ns
			2.3 to 2.7	–	7.8	–	7.8	
			2.7	–	7.0	–	7.0	
			3.0 to 3.6	–	6.5	–	6.5	
			4.5 to 5.5	–	4.5	–	4.5	
t_s	Setup Time, HIGH or LOW Dn to LE	Waveform 3	1.65 to 1.95	4.0	–	4.0	–	ns
			2.3 to 2.7	4.0	–	4.0	–	
			2.7	2.5	–	2.5	–	
			3.0 to 3.6	2.5	–	2.5	–	
			4.5 to 5.5	2.5	–	2.5	–	

Share Feedback
Your Opinion Matters

Downloaded from Arrow.com.

AC ELECTRICAL CHARACTERISTICS

Symbol	Parameter	Test Condition	V_{CC} (V)	T_A = −40 °C to +85 °C		T_A = −55 °C to +125 °C		Unit
				Min	Max	Min	Max	
t_h	Hold Time, HIGH or LOW Dn to LE	Waveform 3	1.65 to 1.95	2.0	–	2.0	–	ns
			2.3 to 2.7	2.0	–	2.0	–	
			2.7	1.5	–	1.5	–	
			3.0 to 3.6	1.5	–	1.5	–	
			4.5 to 5.5	1.5	–	1.5	–	
t_W	Pulse Width, LE HIGH	Waveform 3	1.65 to 1.95	4.0	–	4.0	–	ns
			2.3 to 2.7	4.0	–	4.0	–	
			2.7	3.3	–	3.3	–	
			3.0 to 3.6	3.3	–	3.3	–	
			4.5 to 5.5	3.3	–	3.3	–	
t_{OSHL}, t_{OSLH}	Output to Output Skew		1.65 to 1.95	–	–	–	–	ns
			2.3 to 2.7	–	–	–	–	
			2.7	–	–	–	–	
			3.0 to 3.6	–	1.0	–	1.0	
			4.5 to 5.5	–	–	–	–	

DYNAMIC SWITCHING CHARACTERISTICS

Symbol	Characteristic	Condition	T_A = +25°C			Unit
			Min	Typ	Max	
V_{OLP}	Dynamic LOW Peak Voltage (Note 6)	V_{CC} = 3.3 V, C_L = 50 pF, V_{IH} = 3.3 V, V_{IL} = 0 V V_{CC} = 2.5 V, C_L = 30 pF, V_{IH} = 2.5 V, V_{IL} = 0 V		0.8 0.6		V V
V_{OLV}	Dynamic LOW Valley Voltage (Note 6)	V_{CC} = 3.3 V, C_L = 50 pF, V_{IH} = 3.3 V, V_{IL} = 0 V V_{CC} = 2.5 V, C_L = 30 pF, V_{IH} = 2.5 V, V_{IL} = 0 V		−0.8 −0.6		V V

6. Number of outputs defined as “n”. Measured with “n-1” outputs switching from HIGH-to-LOW or LOW-to-HIGH. The remaining output is measured in the LOW state.

CAPACITIVE CHARACTERISTICS

Symbol	Parameter	Condition	Typ	Unit
C_{IN}	Input Capacitance	V_{CC} = 3.3 V, V_I = 0 V or V_{CC}	7	pF
$C_{I/O}$	Input/Output Capacitance	V_{CC} = 3.3 V, V_I = 0 V or V_{CC}	8	pF
C_{PD}	Power Dissipation Capacitance	10 MHz, V_{CC} = 3.3 V, V_I = 0 V or V_{CC}	25	pF

Share Feedback
Your Opinion Matters

Downloaded from Arrow.com.

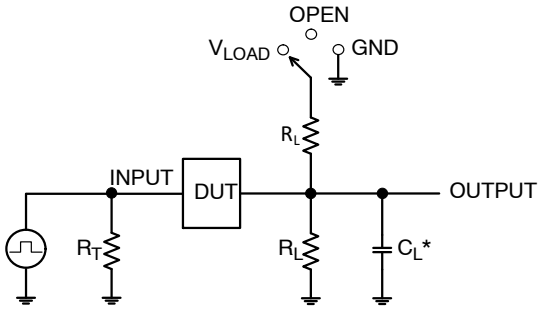

C_L includes probe and jig capacitance
R_T is Z_{OUT} of pulse generator (typically 50 Ω)
f = 1 MHz

Test	Switch Position
t_{PLH} / t_{PHL}	Open
t_{PLZ} / t_{PZL}	V_{LOAD}
t_{PHZ} / t_{PZH}	GND

Figure 3. Test Circuit

V_{CC}, V	R_L, Ω	C_L, pF	V_{LOAD}	V_m, V	V_Y, V
1.65 to 1.95	500	30	2 x V_{CC}	V_{CC}/2	0.15
2.3 to 2.7	500	30	2 x V_{CC}	V_{CC}/2	0.15
2.7	500	50	6 V	1.5	0.3
3.0 to 3.6	500	50	6 V	1.5	0.3
4.5 to 4.5	500	50	2 x V_{CC}	V_{CC}/2	0.3

Share Feedback
Your Opinion Matters

Downloaded from Arrow.com.

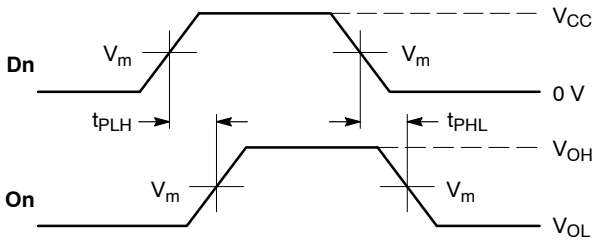

WAVEFORM 1 – PROPAGATION DELAYS
$t_R = t_F = 2.5$ ns, 10% to 90%; f = 1 MHz; $t_W = 500$ ns

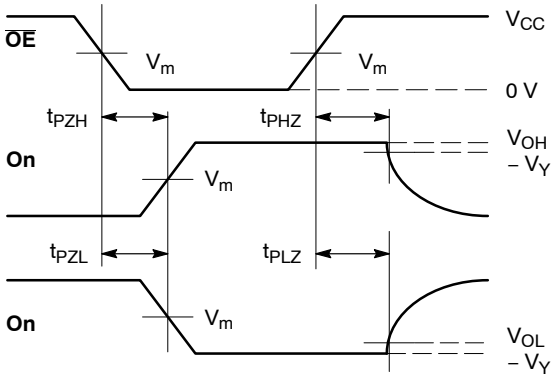

WAVEFORM 2 – OUTPUT ENABLE AND DISABLE TIMES
$t_R = t_F = 2.5$ ns, 10% to 90%; f = 1 MHz; $t_W = 500$ ns

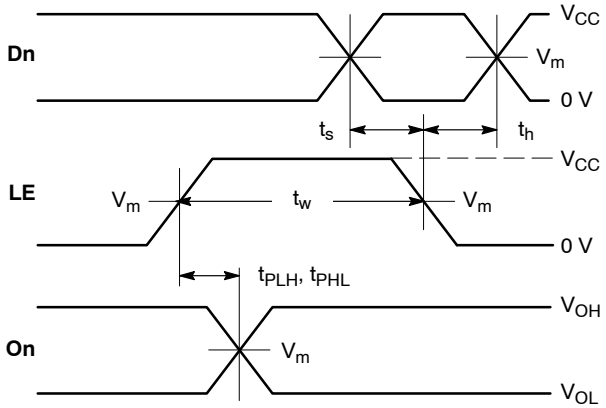

WAVEFORM 3 – LE to On PROPAGATION DELAYS, LE MINIMUM PULSE WIDTH, Dn to LE SETUP AND HOLD TIMES
$t_R = t_F = 2.5$ ns, 10% to 90%; f = 1 MHz; $t_W = 500$ ns except when noted

Figure 4. AC Waveforms

ORDERING INFORMATION

Device	Marking	Package	Shipping†
MC74LCX573DWG	LCX573	SOIC-20 (Pb-Free)	38 Units / Rail
MC74LCX573DWR2G	LCX573	SOIC-20 (Pb-Free)	1000 Tape & Reel
MC74LCX573DTG	LCX 573	TSSOP-20 (Pb-Free)	75 Units / Rail
MC74LCX573DTR2G	LCX573	TSSOP-20 (Pb-Free)	2500 Tape & Reel
MC74LCX573DTR2G-Q*	LCX573	TSSOP-20 (Pb-Free)	2500 Tape & Reel

DISCONTINUED (Note 7)

NLV74LCX573DTR2G*		TSSOP-20 (Pb-Free)	2500 Tape & Reel

†For information on tape and reel specifications, including part orientation and tape sizes, please refer to our Tape and Reel Packaging Specifications Brochure, BRD8011/D.

*-Q Suffix for Automotive and Other Applications Requiring Unique Site and Control Change Requirements; AEC-Q100 Qualified and PPAP Capable.

7. **DISCONTINUED:** This device is not recommended for new design. Please contact your **onsemi** representative for information. The most current information on this device may be available on www.onsemi.com.

Share Feedback
Your Opinion Matters

Downloaded from Arrow.com.

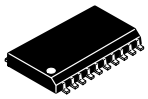

SCALE 1:1

SOIC−20 WB
CASE 751D−05
ISSUE H

DATE 22 APR 2015

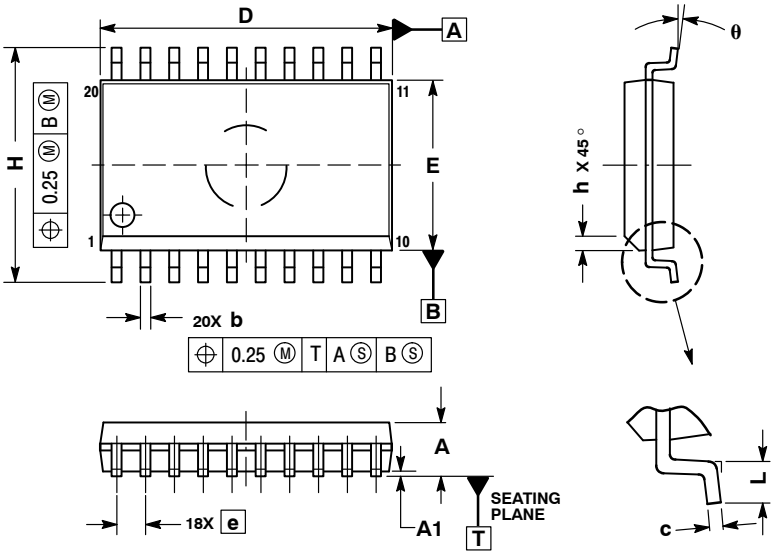

NOTES:
1. DIMENSIONS ARE IN MILLIMETERS.
2. INTERPRET DIMENSIONS AND TOLERANCES PER ASME Y14.5M, 1994.
3. DIMENSIONS D AND E DO NOT INCLUDE MOLD PROTRUSION.
4. MAXIMUM MOLD PROTRUSION 0.15 PER SIDE.
5. DIMENSION B DOES NOT INCLUDE DAMBAR PROTRUSION. ALLOWABLE PROTRUSION SHALL BE 0.13 TOTAL IN EXCESS OF B DIMENSION AT MAXIMUM MATERIAL CONDITION.

	MILLIMETERS	
DIM	MIN	MAX
A	2.35	2.65
A1	0.10	0.25
b	0.35	0.49
c	0.23	0.32
D	12.65	12.95
E	7.40	7.60
e	1.27 BSC	
H	10.05	10.55
h	0.25	0.75
L	0.50	0.90
θ	0°	7°

RECOMMENDED SOLDERING FOOTPRINT*

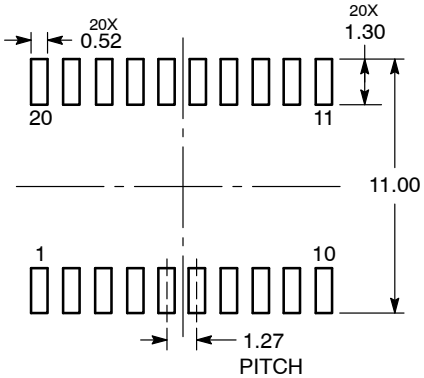

DIMENSIONS: MILLIMETERS

*For additional information on our Pb−Free strategy and soldering details, please download the **onsemi** Soldering and Mounting Techniques Reference Manual, SOLDERRM/D.

GENERIC MARKING DIAGRAM*

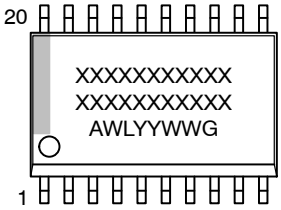

XXXXX = Specific Device Code
A = Assembly Location
WL = Wafer Lot
YY = Year
WW = Work Week
G = Pb−Free Package

*This information is generic. Please refer to device data sheet for actual part marking. Pb−Free indicator, "G" or microdot "▪", may or may not be present. Some products may not follow the Generic Marking.

DOCUMENT NUMBER:	98ASB42343B	Electronic versions are uncontrolled except when accessed directly from the Document Repository. Printed versions are uncontrolled except when stamped "CONTROLLED COPY" in red.
DESCRIPTION:	SOIC−20 WB	PAGE 1 OF 1

onsemi and onsemi are trademarks of Semiconductor Components Industries, LLC dba **onsemi** or its subsidiaries in the United States and/or other countries. **onsemi** reserves the right to make changes without further notice to any products herein. **onsemi** makes no warranty, representation or guarantee regarding the suitability of its products for any particular purpose, nor does **onsemi** assume any liability arising out of the application or use of any product or circuit, and specifically disclaims any and all liability, including without limitation special, consequential or incidental damages. **onsemi** does not convey any license under its patent rights nor the rights of others.

Downloaded from Arrow.com.

onsemi, onsemi, and other names, marks, and brands are registered and/or common law trademarks of Semiconductor Components Industries, LLC dba "**onsemi**" or its affiliates and/or subsidiaries in the United States and/or other countries. **onsemi** owns the rights to a number of patents, trademarks, copyrights, trade secrets, and other intellectual property. A listing of **onsemi**'s product/patent coverage may be accessed at www.onsemi.com/site/pdf/Patent−Marking.pdf. **onsemi** reserves the right to make changes at any time to any products or information herein, without notice. The information herein is provided "as−is" and **onsemi** makes no warranty, representation or guarantee regarding the accuracy of the information, product features, availability, functionality, or suitability of its products for any particular purpose, nor does **onsemi** assume any liability arising out of the application or use of any product or circuit, and specifically disclaims any and all liability, including without limitation special, consequential or incidental damages. Buyer is responsible for its products and applications using **onsemi** products, including compliance with all laws, regulations and safety requirements or standards, regardless of any support or applications information provided by **onsemi**. "Typical" parameters which may be provided in **onsemi** data sheets and/or specifications can and do vary in different applications and actual performance may vary over time. All operating parameters, including "Typicals" must be validated for each customer application by customer's technical experts. **onsemi** does not convey any license under any of its intellectual property rights nor the rights of others. **onsemi** products are not designed, intended, or authorized for use as a critical component in life support systems or any FDA Class 3 medical devices or medical devices with a same or similar classification in a foreign jurisdiction or any devices intended for implantation in the human body. Should Buyer purchase or use **onsemi** products for any such unintended or unauthorized application, Buyer shall indemnify and hold **onsemi** and its officers, employees, subsidiaries, affiliates, and distributors harmless against all claims, costs, damages, and expenses, and reasonable attorney fees arising out of, directly or indirectly, any claim of personal injury or death associated with such unintended or unauthorized use, even if such claim alleges that **onsemi** was negligent regarding the design or manufacture of the part. **onsemi** is an Equal Opportunity/Affirmative Action Employer. This literature is subject to all applicable copyright laws and is not for resale in any manner.

ADDITIONAL INFORMATION

TECHNICAL PUBLICATIONS:
Technical Library: www.onsemi.com/design/resources/technical−documentation
onsemi Website: www.onsemi.com

ONLINE SUPPORT: www.onsemi.com/support
For additional information, please contact your local Sales Representative at www.onsemi.com/support/sales

Downloaded from Arrow.com.