**MICRO SWITCH**
FREEPORT ILLINOIS, U.S.A.
A DIVISION OF HONEYWELL
FED. MFG. CODE 91929

# SWITCH-BASIC

CATALOG LISTING
**YA-1R2416-A42**
**ADF2800**

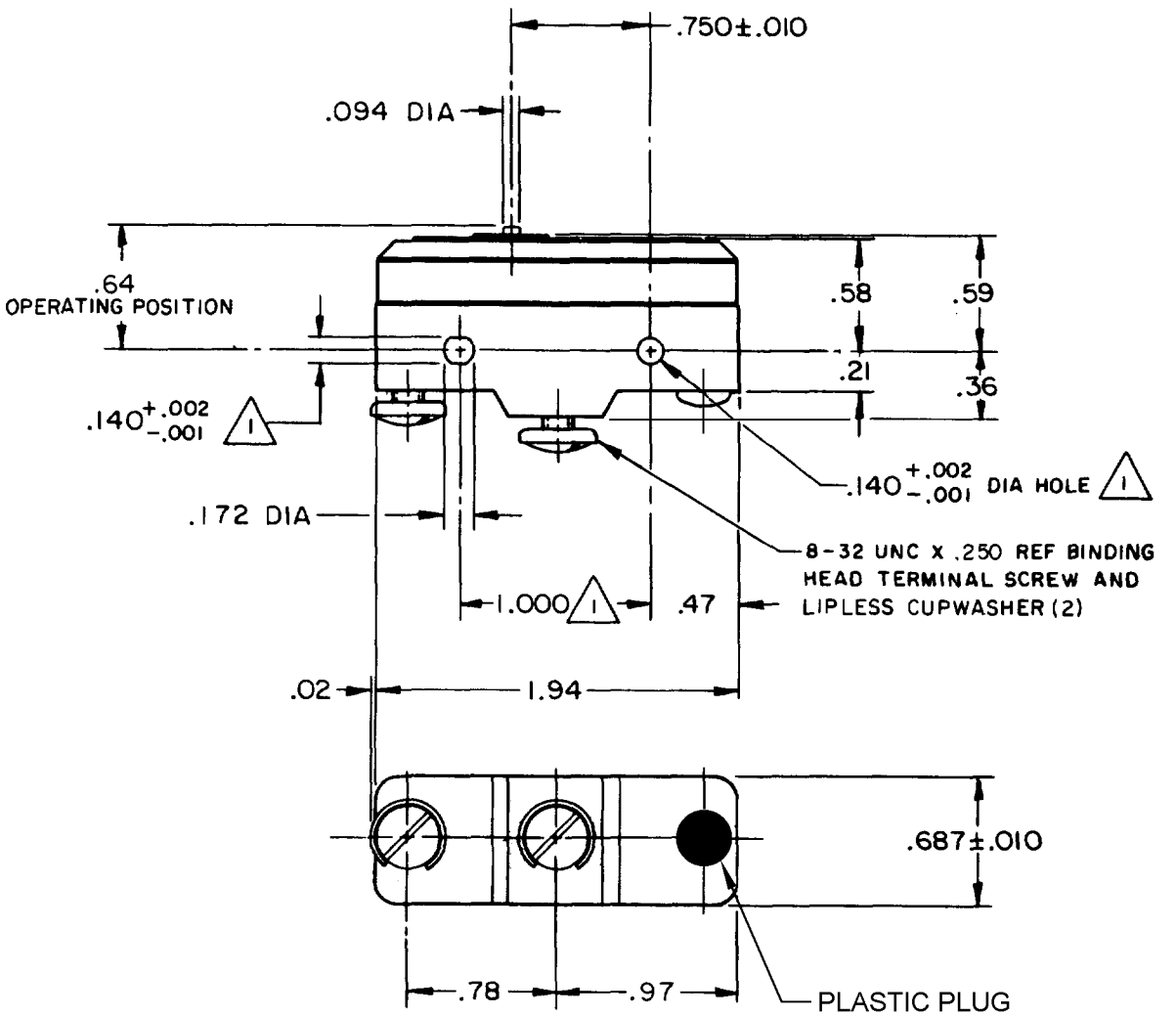


NOTES
1. MOUNTING HOLES WILL ACCEPT PINS OR SCREWS OF .139 MAX DIA ON 1.000±.002 CENTERS
2. SWITCH TO WITHSTAND TEMPERATURE OF 250° F

THIS DRAWING COVERS A PROPRIETARY ITEM AND IS THE PROPERTY OF MICRO SWITCH, A DIVISION OF HONEYWELL. THIS DRAWING IS NOT TO BE COPIED OR USED WITHOUT THE APPROVAL OF MICRO SWITCH.

THIRD ANGLE PROJECTION

## CHARACTERISTICS

OPERATING FORCE --------13-19 OZ
DIFFERENTIAL FORCE ----1 1/2-6 OZ
RELEASE FORCE --------10 OZ MIN
DIFFERENTIAL TRAVEL----.004-.006
OVERTRAVEL----------.010 MIN

## ELECTRICAL DATA

CONTACT ARRANGEMENT
S P N O

L33 20A-125, 250 OR 480 VAC
1HP-125 VAC; 2HP-250 VAC
0.3A-125 VDC; 0.15A-250 VDC (T)

L288
L308
L310
L315
20(3)A 250V ~ T85 5E4

SCALE FULL
DO NOT SCALE PRINT

TOLERANCES
APPLY TO DESIGN UNITS. CONVERSIONS ARE ONLY FOR REFERENCE. UNLESS NOTED, TOLERANCES ARE ±

| | DIM. mm | TOL. mm/in | DIM. in | TOL. mm/in |
|---|---|---|---|---|
| NO PLACES | X | 1/.04 | | |
| ONE PLACE | X.X | 0.4/.016 | X.X | 0.8/.03 |
| TWO PLACES | X.XX | 0.16/.006 | X.XX | 0.38/.015 |
| THREE PLACES | | | X.XXX | 0.13/.005 |
| ANGLES | | | | |

DESIGN UNITS SI METRIC ☐ US CUSTOMARY ☒

WEIGHT .063 LB

CATALOG LISTING YA-1R2416-A42
PAGE 1 OF 1
M
ISSUE 7
REPLACES X71572-YA
RELEASE NO. PR-11226
12SEP07 PSR
CHECK
09JAN06 RJ
CHECK
25 MAY 82 CEB
CHECK
19 MAY 82 KAG
DRAWN
RASTER
FO-52848-A

REVISIONS

| | | |
|---|---|---|
| A | C051554 | TSK 21 JULY 82 |
| B | CO-77589 | MAM 29 MAR 94 |
| C | C093346 | DLT 28 AUG 98 |
| D | 0000566 | CSL 17 JUN 03 |
| E | 0017742 | TSG 09JAN06 |
| F | 0033746 | JA 12SEP07 |

Downloaded from Arrow.com.