Alle Rechte vorbehalten/ *All rights reserved*

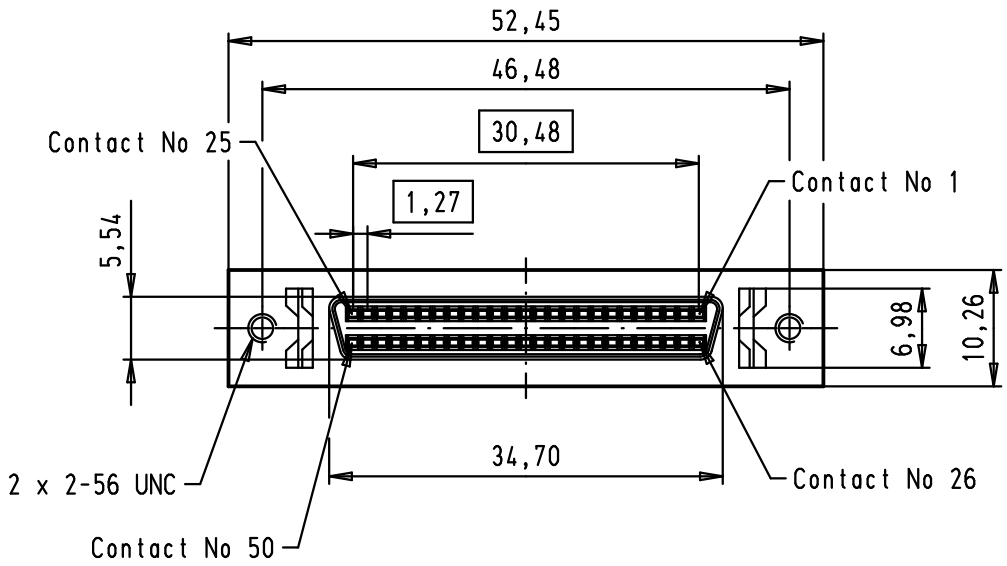

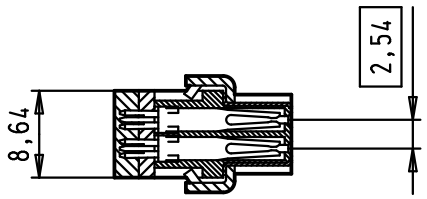

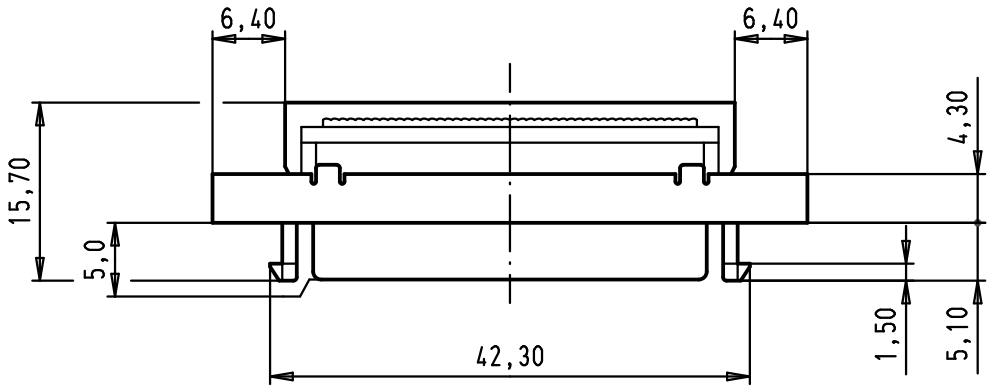

Panel cutout

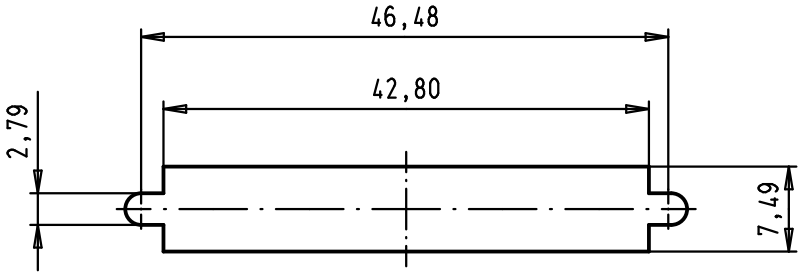

				Dat.	Name			Maßstab/ *Scale*
			Detail.	30/08/00	ALSPACE	All Dim. in mm Orig. Size DIN A 4	*Har-mik®* I/O pin/socket SCSI 2 IDC panel 50 poles female connector with 2-56 UNC threads and latches	1,5:1
			Insp.					
			Stand.					
EC00321	13/03/09	PK	HARTING EURL F-95972 Paris				TB 60 04 050 5343	Blatt/*Page* 1/1
27941	30/08/00	ALSPACE					Sub.	
Mod.	Dat.	Name						

Downloaded from Arrow.com.