PRODUCT NUMBER: 304-13-152-41-780000

www.mill-max.com
DATA SHEET

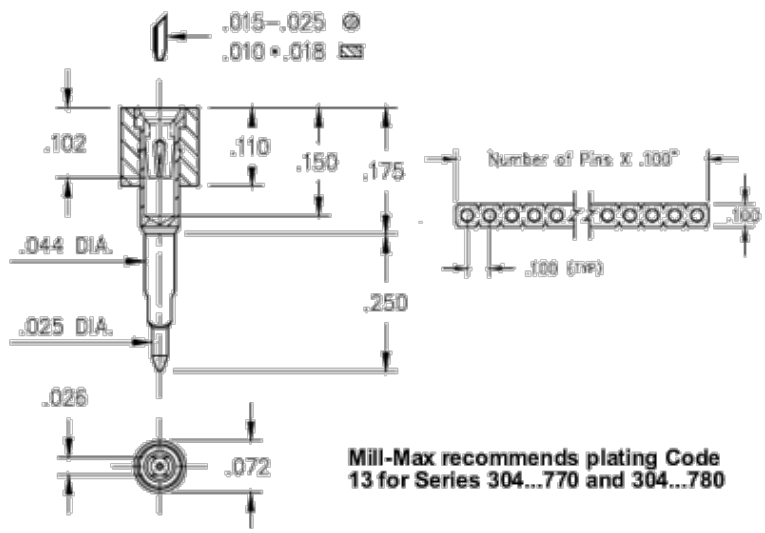



General Info	
Description[1]:	Solderless Press-Fit Socket Accepts .015"-.025" (0,381-0,635mm) dia leads
Type:	Interconnect
Category:	Machined Pin Socket
Mounting Style:	Press-Fit Into a Plated Through Hole
# Pins:	52
Packaging[2]:	Packaged in Box or Tube
Rows:	Single Row
ECCN:	Contact Factory
HTSUS:	8536.90.4040
Product Lifecycle:	Active
Country Of Origin:	USA

(c)2025 Mill-Max Mfg Corp. | 516-922-6000
190 Pine Hollow Road, Oyster Bay, NY 11771

Downloaded from Arrow.com.

304-13-152-41-780000- SPECIFICATIONS

Environmental Specs	
Temperature Range[3]:	-55/+125° C
Shock[4]:	No Elect. Discontinuity > 1µs @ 50g
Vibration[5]:	No Elect. Discontinuity > 1µs @ 10-2000HZ, 15 G
RoHS[6]:	Yes
Moisture Sensitivity Level (MSL):	1 (Unlimited)
REACH Status:	REACH Unaffected

Mechanical Specs	
Mechanical life (Durability)[7]:	1,000 Cycles Minimum

Materials	
Loose Pin/Receptacle # (Material):	0478 (Brass Alloy)
Shell Plating:	10 µ" Gold over 100 µ" Nickel
Inner Contact #:	30
# Contact Fingers:	4
Inner Contact Material:	Beryllium Copper
Inner Contact Plating:	30 µ" Gold over 50 µ" Nickel
Insulator Material:	High Temp Thermoplastic

Technical Specs	
Pitch:	.100" (2,540mm)

Electrical Specs	
Contact Resistance[8]:	10 mΩ max.
Rated Voltage:	100 VRMS/150 VDC
Insulation Resistance:	10,000 MΩ min.
Dielectric Withstanding Voltage:	1,000 VRMS min.

(c)2025 Mill-Max Mfg Corp. | 516-922-6000
190 Pine Hollow Road, Oyster Bay, NY 11771

Downloaded from Arrow.com.

NOTES:

1. **Standard Tolerances**
   Assembly tolerance: +/-.010" (.25mm)
   Connector Length "L"

Connector Length "L"	Tolerance
L ≤ 2" (L ≤ 50.8 mm)	+/- .005" (+/- .127 mm)
2< L ≤ 3" (50.8 < L ≤ 76.2 mm)	+ .007/ - .006" (+ .178/ -.152 mm)
3< L ≤ 4" (76.2 < L ≤ 101.6 mm)	+ .009 / - .007" (+ .229 / - .178 mm)
4< L ≤ 5" (101.6 < L ≤ 127 mm)	+ .011 / - .008" (+ .279 / - .203 mm)
5< L ≤ 6.4" (127 < L ≤ 162.56 mm)	+ .013 / - .009" (+ .330 / - .229 mm)

   Insulator width: +/-.005 (.13mm)
   Insulator height: +/-.005 (.13mm)
   Co-planarity of SMT connectors: .005" (.13mm) up to 1" (25.4mm) in connector length
   Insulator Flatness: .005" (.13mm) up to 1" (25.4mm) in connector length
   Pin Length: +/-.005 (.13mm)
   Pin Diameter: +/-.002 (.051mm)
   Pin Angle: +/-2°
2. Not all part numbers in the series may be packaged in tubes. Some specific part numbers may be packaged in a box.
3. Per IEC 60512-11-(4,-9,-10,-12)
4. For discrete pin only. Per IEC 60512-6-3: Test 6c: Shock
5. For discrete pin only. Per IEC 60512-6-4: Test 6d: Vibration (sinusoidal)
6. Mill-Max products labeled with the RoHS symbol are compliant with all three ROHS Directives. All of our products previously described as RoHS (2002/95/EC) and RoHS-2 (2011/65/EC) are also compliant with RoHS-3 (2015/863/EU).
7. Receptacles are capable of 1,000 Minimum insertion/extraction cycles for a broad range of applications. Mating pin size, shape and finish, along with application specific variables, will affect the life of a receptacle contact.
8.

ADDITIONAL NOTES AND SPECIFICATIONS

In the interest of improved design, quality and performance , Mill-Max reserves the right to make changes in its specifications without prior notice. Specifications and tolerances are provided wherever possible. The tolerance on dimensions of critical to function features is typically held tighter than the stated standard tolerances, such as press-fits, holes and lengths affecting the coplanarity of SMT products. Due to the wide variety of interconnects Mill-Max offers, the specific tolerances vary from product to product. If you need information regarding the tolerance of a particular part, please contact Technical Services.

RELATED LINKS AND DOCUMENTS

- Engineering Notebook: **Mill-Max Press-Fit Pins**
- Environmental Compliance: https://www.mill-max.com/rohs

(c)2025 Mill-Max Mfg Corp. | 516-922-6000
190 Pine Hollow Road, Oyster Bay, NY 11771

Downloaded from Arrow.com.