General

Version 2.82

S-300 series is one of world's smallest NDIR CO2 sensor module, of which persistent Stability and Temperature effect resistance besides various outputs are much favored by customers in stocks raising, greenhouse, HVAC, scientific projects, etc.

ELT Sensor
Data Sheet for S-300

Features

- Non-Dispersive Infrared (NDIR) technology used to measure CO_2 levels.
- Pre-calibrated
- Available outputs : TTL-UART, I2C, ALARM, (PWM/Analog Voltage option)
- Gold-plated sensor provides long-term calibration stability.
- Installed re-calibration function
- ACDL (Periodical Automatic Calibration) and MCDL (Non-Periodical Manual Calibration) are available
- ROHS Directive- 2011/65/EU, [EN50581 : 2012,IEC 62321-3-1 : 2013].
- Size : 33mmx33mmx13.1mm
- Weight : 10 grams

Downloaded from Arrow.com.

S-300 Specifications

General Performance

Operating Temperature : -10 ~ 60℃

Operating Humidity : 0 ~ 95% RH (Non-condensing), 'G' option : 0 ~ 99% RH (Non-condensing)

Operating Environment : Residential, Commercial spaces, Greenhouse etc.

Storage Temperature : -30℃ ~70℃

CO_2 Measurement

Sensing Method : NDIR (Non-dispersive Infrared)

Measurement Range : 0 ~ 2,000 (0~3,000/5,000/10,000ppm, 2%/3%/5% models are available)

Accuracy : ± 30ppm ± 3% of reading [(1)(2)(3)] (±300ppm ±3% of reading - 2%/3%/5% models)

Step Response Time (1/e) : 60 seconds

Sampling Interval : 3 seconds

Warming-up Time : < 6 seconds (for Operation), 5 minutes (for Accuracy)

Electrical Data

Power Input : 5V ± 5% [(4)]

Current Consumption : Normal mode 19mA, Peak : 240mA, Sleep < 0.5mA

Product Derivatives and Relative Functions

Products	Feature	Option
S-300	UART,I2C, ALARM, (AVO or PWM is option), MCDL, ACDL, 13+14 Connector	S-300**-3V**
S-300**L** (Low Power)	**Sleep mode** is added on S-300, which consume < 0.5mA	S-300**L-3V**
S-300**G** (99% Humidity)	**Resistance up to 99% Humidity** for Application of Agricultural Green House, Stock Raising,etc.	S-300**G-3V**
S-300**LG**	**Sleep mode + 99% Humidity**	S-300**LG-3V**
S-300**A** (ACDL S/W)	ACDL Software is added on S-300, which Calibrate Sensor every week	S-300**A-3V**

(1)Accuracy of ±20ppm ±3% is acquirable through ACDL logic after 3 times 3 weeks

(2) or 10 minutes MCDL with Standard CO2 gas can be used as option..

(3) Air pressure is assumed as 101.3 kPa

(4) DC Supply should be regulated , low noise power source for best accuracy

Downloaded from Arrow.com.

S-300 has various output TTL-UART, I2C and ALARM while as AVO / PWM is selectable as option. 2.54pitch 13pin side hole connector besides 2mm pitch 10 and 4pin 2 row header connectors. Periodic Automatic Calibration (ACDL) and Non-Periodic Manual Calibration (10' MCDL) are executable with H/W pin-setting change.

There are 3 derivatives which has additional function on S-300, S-300L is Low Power model, consumes less than 0.5mA in Sleep mode while as S-300G is hardware-enforced one to be resistant to endure up to 99% humidity for customers whose application is Greenhouse and Stock Raising, S-300A has ACDL software and calibrate weekly after once in 2day from power-on, without 'Low signal' to J12-7 and J13-13 during operation, appropriate for Indoor Air-Quality Monitoring.

Pin Map with J11&J12 Connectors

J-11	Description
1/3	VDD (+5V VCC)
2/4	GND

J-12	S-300	S-300 (Analog Option)
1	TTL RXD (← CPU of Master Board)	
2	TTL TXD (→ CPU of Master Board)	
3	I2C SCL	
4	I2C SDA	
5	GND	
6	Reserved	Analog Voltage (0.5~4.5V) option
7	ACDL(Automatic Calibration)	
8	Reserved	
9	MCDL(10 min. Manual Calibration)	
10	Reset (Low Active, ≤0.4V)	

UART (J-12:P1&P2) : 38,400BPS, 8bit, No parity, 1 stop bit

I2C (J-12:P3&P4) : Slave mode only, Internal pull up resister (10kΩ)

TTL Level Voltage : : $0 \le V_{IL} \le 0.8$, $2.0 \le V_{IH} \le V_{DD}$, $0 \le V_{OL} \le 0.4$, $2.4 \le V_{OH} \le V_{DD}$ (Volt)

ALARM (Open Collector type)

1,000 ppm ≤ Alarm ON, 800 ppm ≥ Alarm OFF and alarming range can be change by EK-100SL with connected to PC.

Option 1: Analog Voltage(J-12:pin-6, J-13:pin-1) **:** 0.5~4.5V

Option 2: PWM (J-13:pin-7 is available) :

t_H = 2 msec (Start) + 1,000 msec x ($Measurement_{(ppm)}$ / $Range_{(ppm)}$), T_L= 2,000 ms - t_H ,

Downloaded from Arrow.com.

Pin Map with J13 Connectors

J-13	S-300	S-300 (AVO or PWM Option)
1	Reserved	Analog Voltage (0.5~4.5V) (Option)
2	Alarm (Open Collector)	
3	GND	
4	VDD (+5V VCC)	
5	TTL TXD (→ CPU of Master Board)	
6	TTL RXD (← CPU of Master Board)	
7	Reserved	PWM Output (Option)
8	I2C SCL	
9	I2C SDA	
10	Reset (Low Active)	
11	ACDL(Automatic Calibration)	
12	Reserved	
13	MCDL(10 min. Manual Calibration)	

Downloaded from Arrow.com.

Dimensions unit : mm

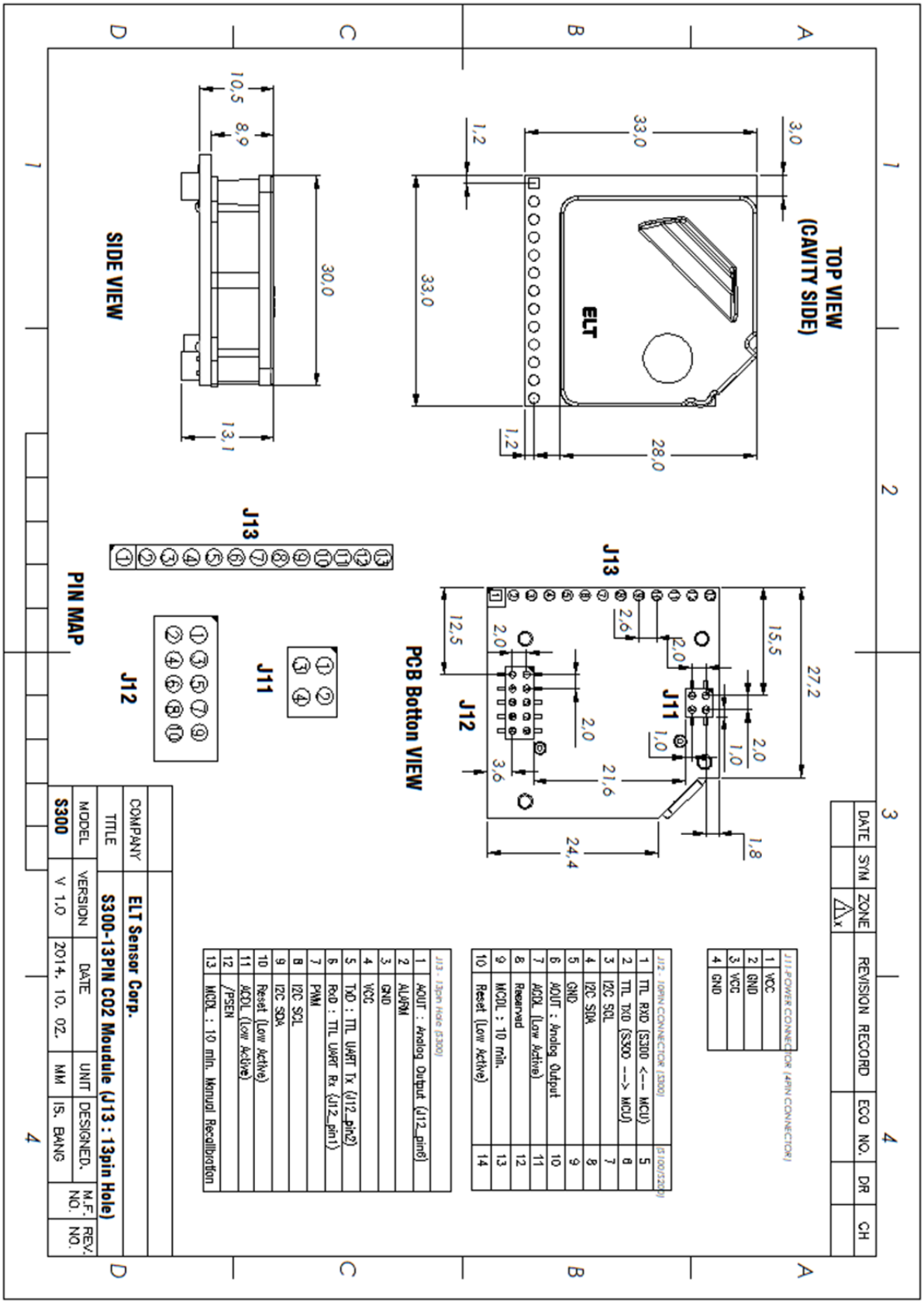

Downloaded from Arrow.com.

ACDL function (Automatic Calibration Function in Dimming light with period)

ACDL could be activated as by setting below.

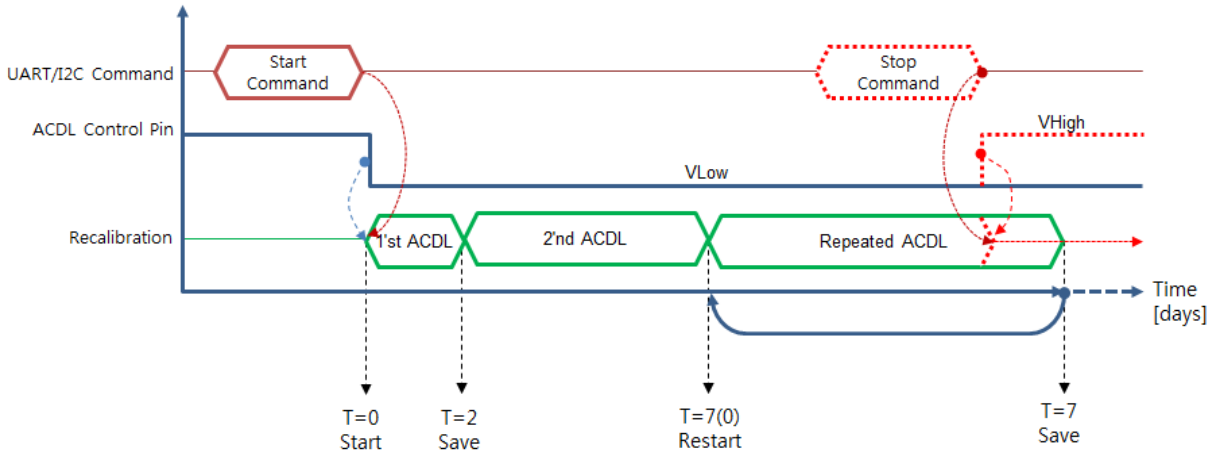

Time Diagram of ACDL

Method 1. UART Command Set; J12: pin-1 (UART-RX) and pin-2 (UART-TX) to Main-Board. (J13: pin-6 and pin-5 are available as well)

Method 2. I2C Command Set; J12: pin-3 (SCL) and pin-4 (SDA) to Main-Board. (J13: pin-8 and pin-9 are available as well)

Method 3. Execute Hardware based ACDL.

J12:pin-7 or J13:pin-11	**J12:pin-9 or J13:pin-13**	Status	Notes
Low	**High**	**H/W ACDL**	**Calibrate weekly after 2 days since power-on**
High	High	Normal	Operate with Pre-calibrated value in Factory or previous state.

※ 1. (J12:pin-7 or J13:pin-11) and (J12:pin-9 or J13:pin-13) shouldn't have 'Low' at any time.

Cf.) Unlike other S-300 series, S-300A operate with software based ACDL setting, which make sensor always operate with ACDL as default unless MCDL is activated.

Method 4**. TRB-100ST (Test and Recalibration Board)** is purchasable to executable, letting sensor be located at ambient air-flow condition and execute by moving jumper following Manual, which is downloadable on the website.

Method 5. Send string command set below to RXD-pin of Sensor on Emulation program. **EK-100SL (Evaluation kit, with Emulation program 'ELTWSD')** is available.

Downloaded from Arrow.com.

10' MCDL function (10 minute Manual Calibration Function in Dimming light).

MCDL enable customer to calibrate as needed, MCDL keep at least 10 minute once it start and should be stopped before 18minute to avoid MCDL fetch repetition.

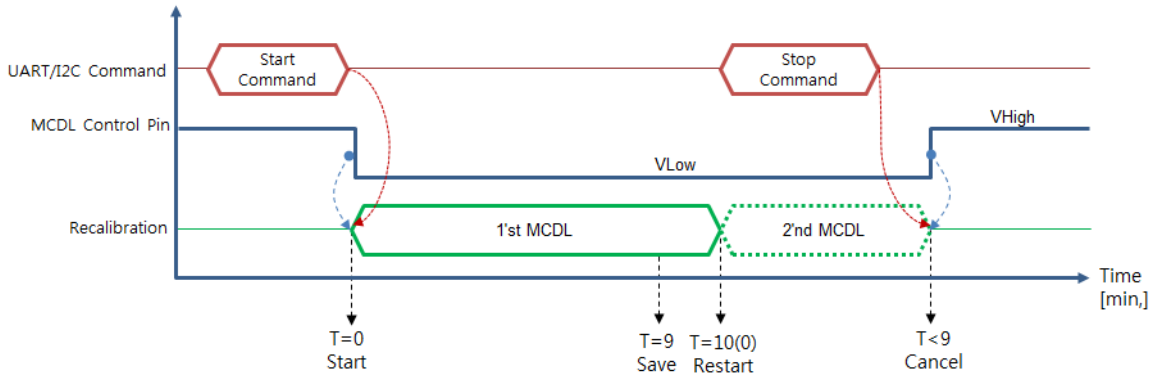

Time Diagram of MCDL

Method 1. UART Command Set; J12: pin-1 (UART-RX) and pin-2 (UART-TX) to Main-Board (J13: pin-6 and pin-5 are available as well.).

Method 2. I2C Command Set; J12: pin-3 (SCL) and pin-4 (SDA) to Main-Board. (J13: pin-8 and pin-9 are available as well.)

Method 3. Execute Hardware based MCDL.

J12:pin-7 or J13:pin-11	**J12:pin-9 or J13:pin-13**	Status	Notes
High	**Low**	**H/W MCDL**	**sensor should be located in 400ppm environment (outside) for 10 minutes**
High	High	Normal	Operate with Pre-calibrated value in Factory or previous state.

※ 1. (J12:pin-7 or J13:pin-11) and (J12:pin-9 or J13:pin-13) shouldn't have 'Low' at any time.
2. Be sure to quit MCDL fetch loop before 18minute.

cf.) Unlike other S-300 series, S-300A has nothing to do with (J12:pin-7 or J13:pin-11).
It is designed to execute MCDL during pin-13 get Low Active Signal. it return to ACDL as the signal to pin-13 is changed to High De-Active Signal.

Method 4. Let Sensor install on Jig Board, **TRB-100ST (Test and Recalibration Board)** with ambient air-flow condition and execute by moving jumper following Manual on the website.

Method 5. Send string command set below to RXD-pin of Sensor on Emulation program.
EK-100SL (Evaluation kit, with Emulation program 'ELTWSD') is available.

Downloaded from Arrow.com.

Output Descriptions

UART Descriptions

Data Format

D6	D5	D4	D3	D2	D1	SP	'p'	'p'	'm'	CR	LF

D6 ~ D1	6 byte CO2 density string
SP	Space: 0x20
'ppm'	'ppm' string
CR	Carriage return : 0x0D
LF	Line feed : 0x0A

Above 12byte consist by 6 byte hexadecimal digits,<SP>,0x70 0x70 0x6D, <CR><LF> , where decimal '0' (corresponds to hexadecimal digit '0x30') is replaced by space (corresponds to hexadecimal digit '0x20'),

EX) 1,255 ppm, results '0x20 0x20 0x31 0x32 0x35 0x35 0x20 0x70 0x70 0x6D 0x0D 0x0A', which displays '__1255_ppm<CR><LF>'on screen.

I2C Communication (Only Slave Mode Operation)

Internal pull up resister

Slave Address: 0x31, Slave Address Byte: Slave Address(0x31) 7 Bit + R/W 1 Bit

Bit7	Bit6	Bit5	Bit4	Bit3	Bit2	Bit1	Bit0
0	1	1	0	0	0	1	R/W Bit

R/W Bit : Read = 1/Write = 0

When reading the data, Slave Address Byte is 0x63, When writing the data, Slave Address Byte is 0x62.

Block Diagram

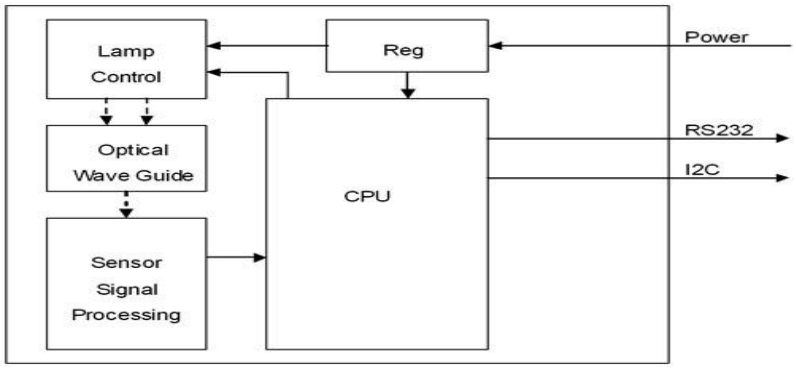

Downloaded from Arrow.com.

Transmission Sequence in Master

1) I2C Start Condition
2) Write Command(Slave Address + R/W Bit(0) = 0x62) Transmission and Check Acknowledge
3) Write Command(ASCII 'R' : 0x52) Transmission and Check Acknowledge
4) I2C Stop Command
5) I2C Start Command
6) Read Command(Slave Address + R/W Bit(1) = 0x63) Transmission and Check Acknowledge
7) Read 7 Byte Receiving Data from Module and Send Acknowledge
   (Delay at least 1ms for reading each byte)

Configuration	CO_2	reserved	reserved	reserved	reserved
1 Byte	2 Byte	0x00	0x00	0x00	0x00

0	0	0	0	1	0	0	0

In need of detail protocol specification and time sequence, **'I2C programming guide'** could be provided by contacting Sales Rep.

Alarm Descriptions

Alarm signal operates as Open Collector type and send TTL on signal since CO2 measured value beyond 1,000 ppm until it go down to 800 ppm. It is designed to be activated when CO2 measured value surpass 1,000 ppm and deactivated down to 800 ppm to avoid unwanted rapid switching by hysteresis effect.

1,000 ppm ≤ Alarm ON, 800 ppm ≥ Alarm OFF

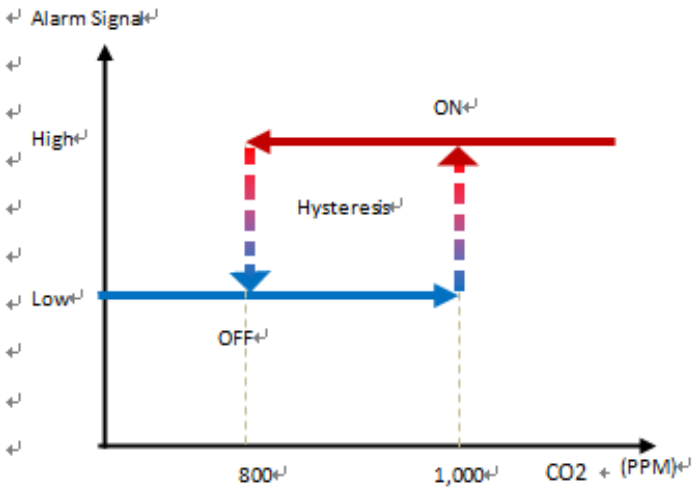

Downloaded from Arrow.com.

Analog Voltage Output Descriptions ; Option

Measured Voltage 0.5V~4.5V match proportionally to 0~ 2,000 each for 2,000 ppm scale sensor
And any of 0~3,000 or 5,000 or 10,000 ppm scale sensor could be set by designating on sale.
Therefore 4.5V will match 2,000 or 3,000 or 4,000 or 10,000 ppm or 2% or 3% or 5% or 10% each.

* CO2 Measurement$_{(ppm)}$ = ((Output $_{Voltage}$– 0.5)/ (4.5 – 0.5) $_{Voltage}$)x F.S. $_{ppm}$,
cf. F.S. $_{(ppm)}$: 2,000/3,000/5,000/10,000 ppm (20,000/30,000/50,000/100,000 is optional.)

EX) if the Output $_{Voltage}$ is 2.5V in 2,000 ppm (F.S. of Reading range)
CO2 Measurement $_{ppm}$ = (2.5 – 0.5) V ÷ (4.5 – 0.5) V x 2,000. $_{ppm}$
= 2 ÷ 4 x 2,000 $_{ppm}$ = 1,000 $_{ppm}$

PWM Descriptions ; Option

* Measurement$_{(ppm)}$ = (t_H-2msec)/1000msec x Range$_{(ppm)}$ (t_H : High Pulse Width)
* Range$_{(ppm)}$: 2,000/3,000/5,000/10,000 ppm (20,000/30,000/50,000/100,000 is optional.)

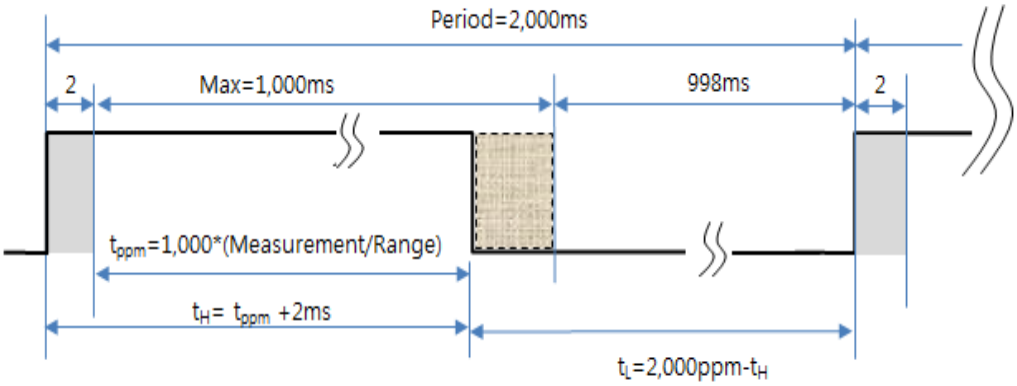

EX) t_H (High Pulse Width) calculation for 400 ppm in 2,000 ppm Range.
*Measurement$_{(ppm)}$ = 400 ppm = (t_H-2ms)/2,000msec x Range$_{(ppm)}$,
*t_H= 1,000 msec * (400 ppm / 2,000 ppm) + 2msec = 202msec
(cf: T_L= Period - t_H = 2,000 ppm – 202 msec = 1,798 msec.)

Downloaded from Arrow.com.

※Caution

1. Please hold only 'PCB' of sensor without holding Cavity directly to avoid the physical shock on sensor. Rough handling or Transportation could result in inaccurate reading.

2. Proper ESD protection during handling is important to avoid electrostatic defect occurrence. The storage of sensor should be insulated as well.

ELT SENSOR Corp.
Chunui Technopark 101-909) 36, Bucheon-ro 198beon-gil,Wonmi-gu,Bucheon-si, Gyeonggi-do, 420-857,Korea
Phone. +82-32-719-8055, http://www.eltsensor.co.kr

Subject to change without notice. Printed in KOREA
2015 ELT Sensor Corp. All rights reserved.
2015. November

Downloaded from Arrow.com.