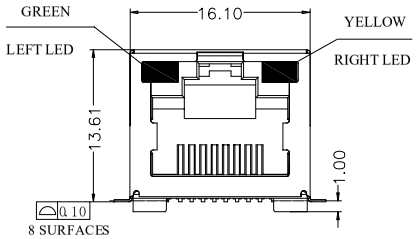

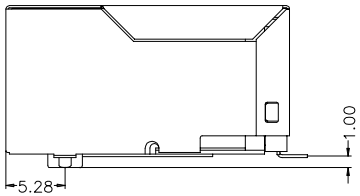

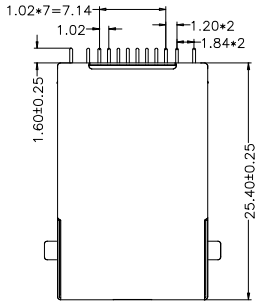

NOTES:
1. CAT rating: CAT 6
2. Complies with IEEE standards and all Gigabit specifications including 350uH with 8mA DC bias.
3. Inter grated Mag-modular design provides higher reliability and conserves minimizing PCB space.
4. Housing: LCP, UL94V0 rated.
5. Contact: Phosphor Bronze(C5191), plating 6u"Au on contact area
6. Input Terminal: Phosphor Bronze(C5191)
7. Metal shielding: Copper alloy with Nickel plated(C2680).
8. Different color of LEDs option available.
9. Operating temperature: -40°C to +85°C.
10. Storage temperature: -40°C to +85°C.
Wave Solder temperature: 255°C±10°C for 5s.
Package: Tray

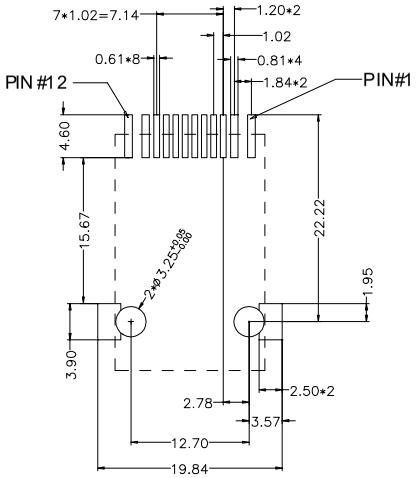

Suggested PCB Layout(Component side view)

Electrical Specifications: (25 °C)

Insertion Loss dB Max	Return Loss dB Min			Common Mode Rejection dB TYP		Crosstalk dB TYP	Hi-Pot (VDC)
1~100MHz	1~30MHz	60~80MHz	80~100MHz	1~100MHz	150MHz	1~100MHz	
-1.0	-18.0	-12.0	-10.0	-30.0	-20.0	-30.0	2250

LED Specifications:

Standard LED Color	LED Wavelength	Forward (V Max)	Typical (V TYP)
Green	560-580 nm	2.5	2.1~2.2
Yellow	580-610 nm	2.5	2.1~2.2

1. LED intensity/wavelength measured with Photo research PR-650 colormeter

2. With a forward Current of 20mA,absolute maximum ratings (Ta=25°)

SCHEMATIC

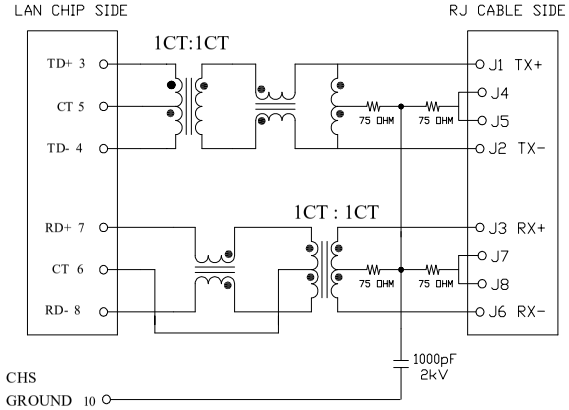

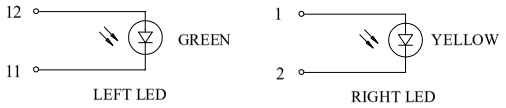

RoHS compliant
Unit: mm

Scale	Free				Date	Name	Description: 8P8C Cat6 SMT with LED
TOLERANCE				Drawn	30.07.2020	Winnie	
X.	±0.50			Approved	30.07.2020	Winnie	ASSMANN WSW-No. A-MJT-8-EA-ZSR-SGY50
X.X	±0.38						
X.XX	±0.25						Drawing-No. ASS 8642 CO rev00
X.XXX	±0.15						
DIM	TOL	0	Drawn	30.07.2020	Winnie		
		Id.	Modification	Date	Name		Replace / Sheet 1/1
Angle	±5°						

ASSMANN wsw components

SV4915

Downloaded from Arrow.com.