OSRAM SFH 4727AS

Datasheet

Not for new design

Published by ams-OSRAM AG
Tobelbader Strasse 30, 8141 Premstaetten, Austria
Phone +43 3136 500-0
ams-osram.com
© All rights reserved

Downloaded from Arrow.com.

OSLON™ Black

SFH 4727AS

OSLON Black Series - 50°

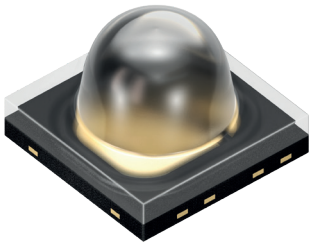

Applications

- Access control & security
- Authentication
- Computing
- Eye, face and hand tracking
- Factory automation
- Home & building automation
- Medical lighting

Features

- Package: diffuse silicone
- ESD: 2 kV acc. to ANSI/ESDA/JEDEC JS-001 (HBM, Class 2)
- IR lightsource with high efficiency
- Double stack emitter
- Low thermal resistance (Max. 9 K/W)
- Optimized for high brightness DC operation
- Centroid wavelength options 920nm and 940nm

Not for new design

Downloaded from Arrow.com.

Ordering Information

Type	Radiant intensity [1)2)] I_F = 1 A; t_p = 10 ms I_e	Radiant intensity [1)] typ. I_F = 1 A; t_p = 10 ms I_e	Ordering Code
SFH 4727AS	900 ... 1400 mW/sr	1,150 mW/sr	Q65112A1144
SFH 4727AS-EBFA-1113-R18	900 ... 1400 mW/sr	1,150 mW/sr	Q65113A6450
SFH 4727AS-EBFA-1113-R33	900 ... 1400 mW/sr	1,150 mW/sr	Q65113A6451
SFH 4727AS-EBFA-11-R18	900 ... 1400 mW/sr	1,150 mW/sr	Q65113A6452
SFH 4727AS-EBFA-11-R33	900 ... 1400 mW/sr	1,150 mW/sr	Q65113A6453
SFH 4727AS-EBFA-13-R33	900 ... 1400 mW/sr	1,150 mW/sr	Q65113A3207
SFH 4727AS-FA-13	1120 ... 1400 mW/sr	1,150 mW/sr	Q65112A9649

Q65112A1144 and Q65113A3207 exclusively contain wavelength bin 13

Not for new design

Downloaded from Arrow.com.

Maximum Ratings

T_A = 25 °C

Parameter	Symbol		Values
Operating temperature	T_{op}	min. max.	-40 °C 125 °C
Storage temperature	T_{stg}	min. max.	-40 °C 125 °C
Junction temperature	T_j	max.	145 °C
Forward current	I_F	min. max.	10 mA 1500 mA
Forward current pulsed t_p ≤ 800 µs; D ≤ 0.005	$I_{F\ pulse}$	max.	3 A
Reverse current [3)]	I_R	max.	200 mA
ESD withstand voltage acc. to ANSI/ESDA/JEDEC JS-001 (HBM, Class 2)	V_{ESD}	max.	2 kV

For the forward current and power consumption please see maximum permissible forward current diagram

Not for new design

Downloaded from Arrow.com.

Characteristics

I_F = 1000 mA; t_p = 10 ms; T_A = 25 °C

Parameter	Symbol		Values
Centroid wavelength [4]	$\lambda_{centroid}$	min. max.	912 nm 950 nm
Spectral bandwidth at 50% $I_{rel,max}$ (FWHM)	$\Delta\lambda$	typ.	37 nm
Half angle	φ	typ.	25 °
Dimensions of active chip area	L x W	typ.	1 x 1 mm x mm
Rise time (10% / 90%) I_F = 3 A; R_L = 50 Ω	t_r	typ.	12 ns
Fall time (10% / 90%) I_F = 3 A; R_L = 50 Ω	t_f	typ.	15 ns
Forward voltage [5]	V_F	typ. max.	2.8 V 3.2 V
Forward voltage [5] I_F = 1.5 A; t_p = 100 µs	V_F	typ. max.	3.05 V 3.6 V
Forward voltage [5] I_F = 3 A; t_p = 100 µs	V_F	typ. max.	3.35 V 4.1 V
Reverse voltage [3] I_R = 20 mA	V_R	max.	1.2 V
Reverse voltage (ESD device) [3]	$V_{R\ ESD}$	min.	5 V
Radiant intensity [1] I_F = 1.5 A; t_p = 100 µs	I_e	typ.	1720 mW/sr
Total radiant flux [6] I_F = 1 A; t_p = 100 µs	Φ_e	typ.	1340 mW
Total radiant flux [6] I_F = 1.5 A; t_p = 100 µs	Φ_e	typ.	1990 mW
Temperature coefficient of voltage	TC_V	typ.	-2 mV / K
Temperature coefficient of brightness	TC_I	typ.	-0.3 % / K
Temperature coefficient of wavelength	TC_λ	typ.	0.3 nm / K
Thermal resistance junction solder point real [7]	$R_{thJS\ real}$	typ. max.	5.5 K / W 9.0 K / W

Not for new design

Downloaded from Arrow.com.

Brightness Groups

T_A = 25 °C

Group	Radiant intensity [1)2)] I_F = 1 A; t_p = 10 ms min. I_e	Radiant intensity [1)2)] I_F = 1 A; t_p = 10 ms max. I_e
EB	900 mW/sr	1120 mW/sr
FA	1120 mW/sr	1400 mW/sr

Only one group in one packing unit.

Centroid Wavelength

I_F = 1 A; t_p = 10 ms

Group	Centroid wavelength [4)] min. $\lambda_{centroid}$	Centroid wavelength [4)] max. $\lambda_{centroid}$
11	912 nm	925 nm
12	925 nm	930 nm
13	930 nm	950 nm

Not for new design

Downloaded from Arrow.com.

Relative Spectral Emission [8], [9]

$I_{e,rel} = f(\lambda)$; $I_F = 1000$ mA; $t_p = 10$ ms

Centroid Wavelength Group 11

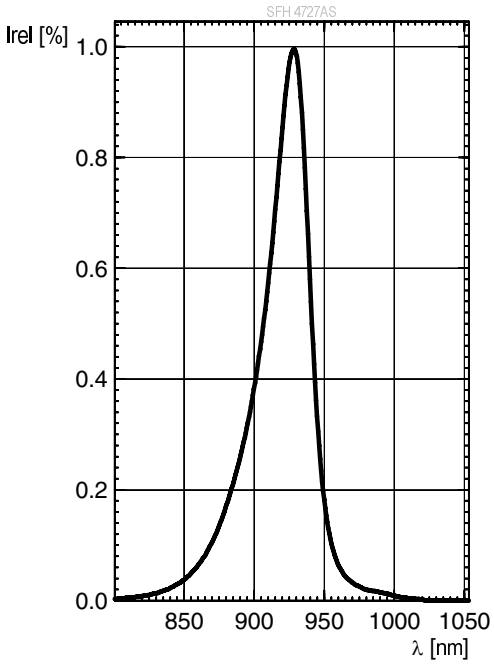

Relative Spectral Emission [8], [9]

$I_{e,rel} = f(\lambda)$; $I_F = 1000$ mA; $t_p = 10$ ms

Centroid Wavelength Group 13

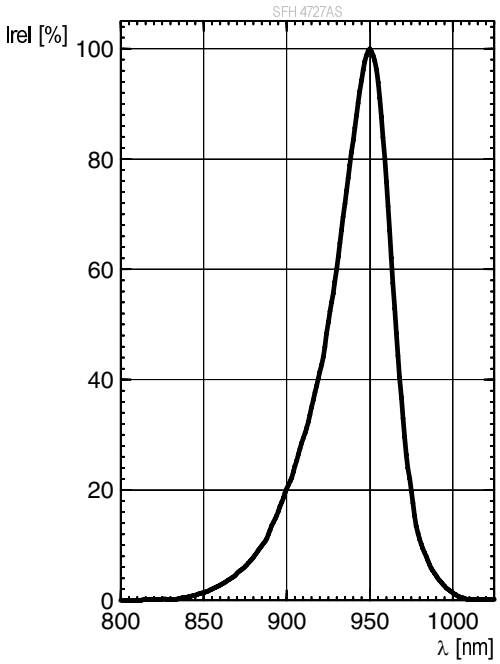

Not for new design

Downloaded from Arrow.com.

Radiation Characteristics [8], [9]

$I_{e,rel} = f(\varphi)$

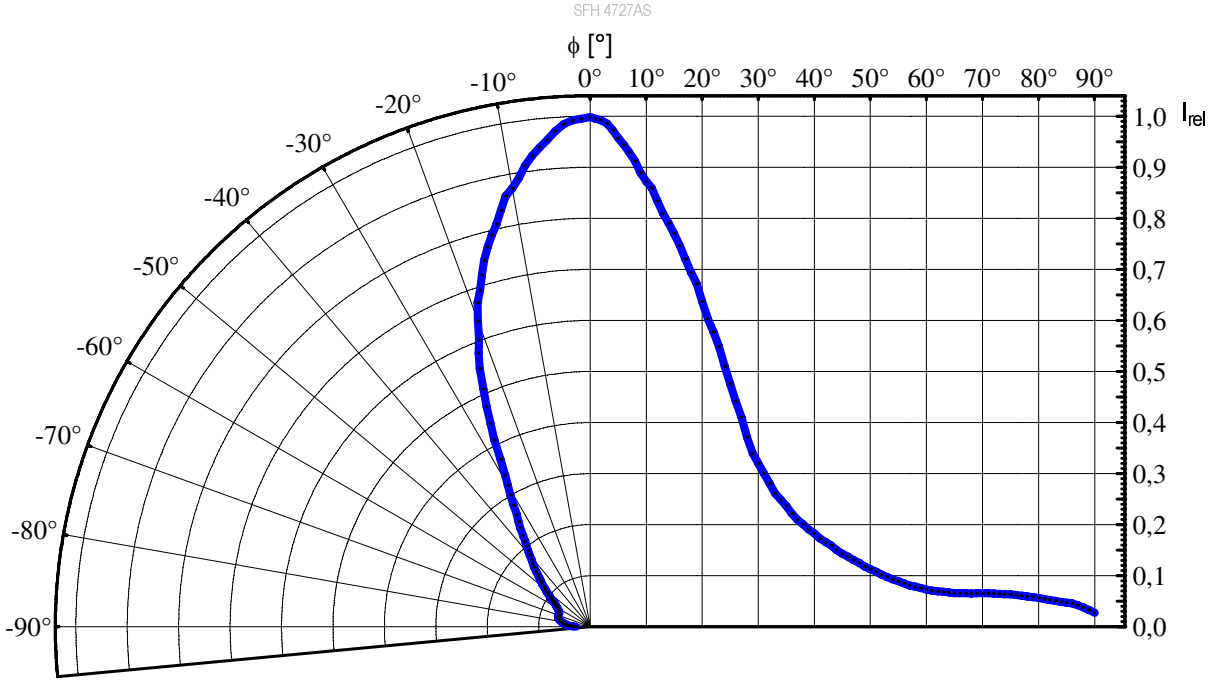

Forward current [8], [9]

$I_F = f(V_F)$; single pulse; t_p = 100 µs

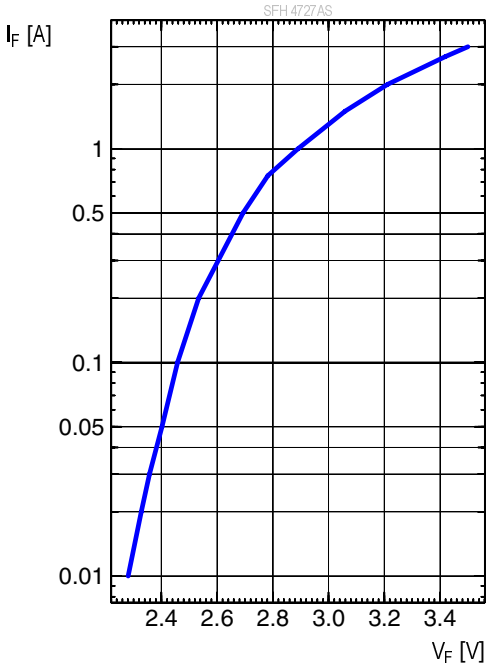

Relative Total Radiant Flux [8], [9]

$\Phi_e/\Phi_e(1000mA) = f(I_F)$; single pulse; t_p = 100 µs

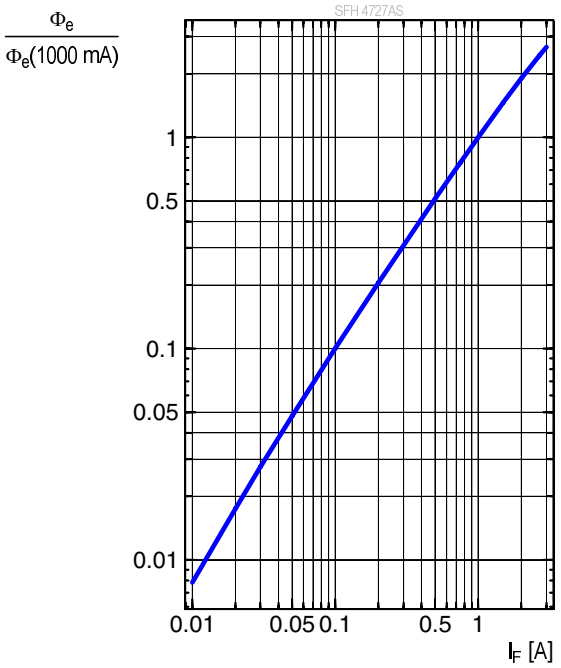

Not for new design

Downloaded from Arrow.com.

Max. Permissible Forward Current

$I_F = f(T_S)$; Rth_{js} = 9 K / W

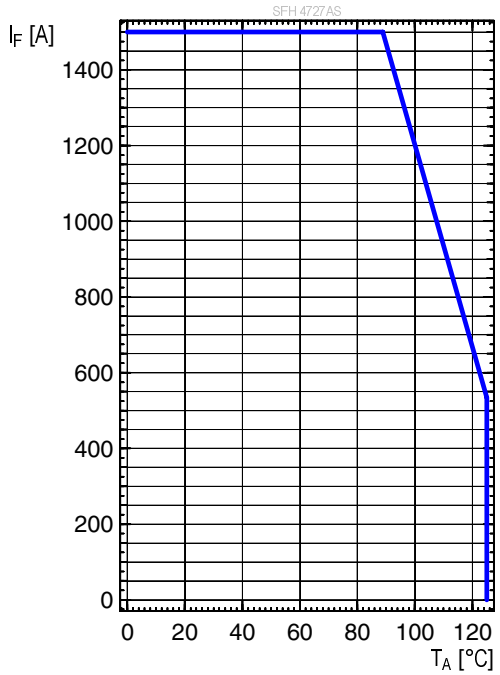

Permissible Pulse Handling Capability

$I_F = f(t_p)$; duty cycle D = parameter; T_S = 85°C

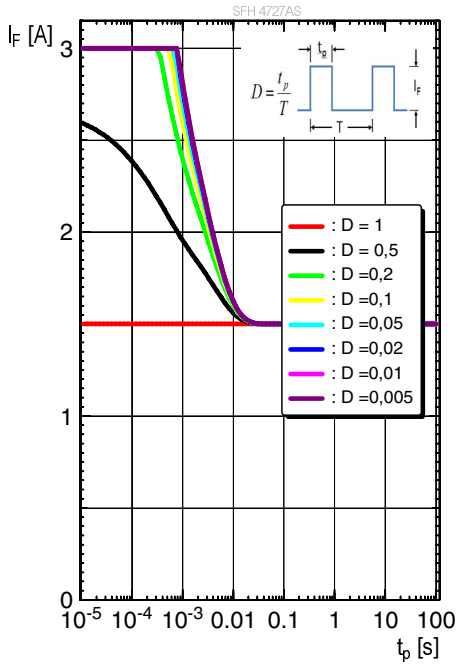

Not for new design

Downloaded from Arrow.com.

Dimensional Drawing [10)]

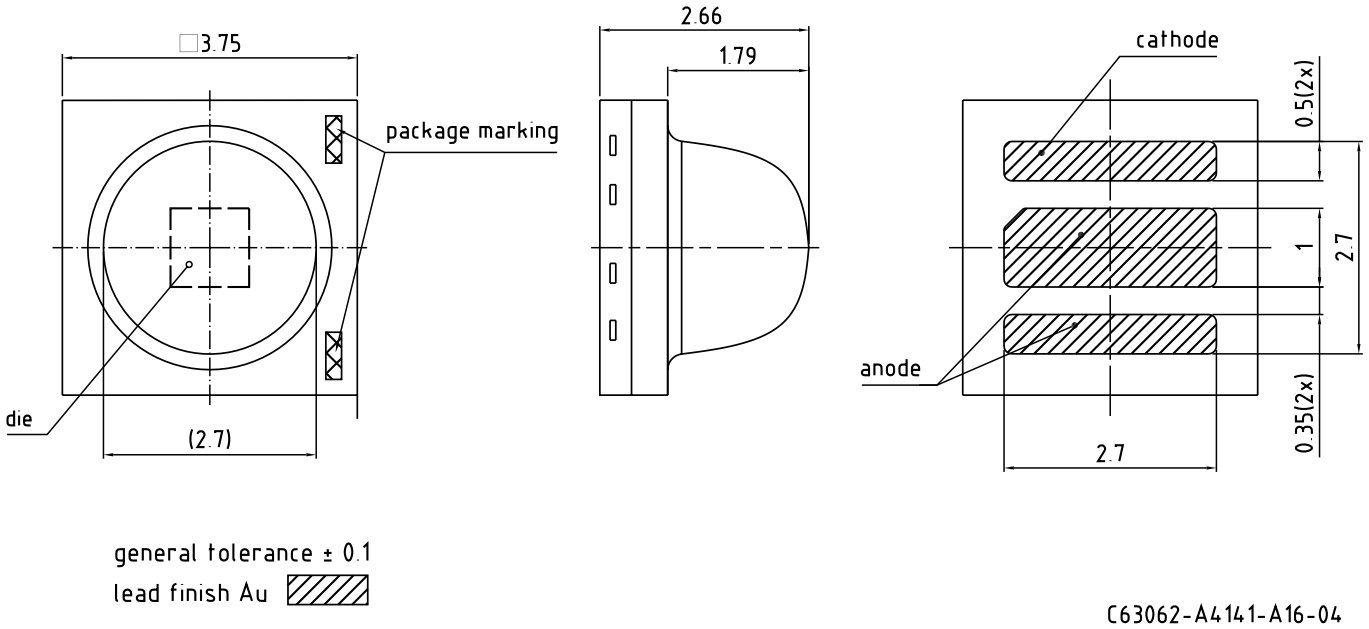

Further Information:

Approximate Weight: 37.0 mg

ESD advice: The device is protected by ESD device which is connected in parallel to the Chip.

Not for new design

Downloaded from Arrow.com.

Recommended Solder Pad [10)]

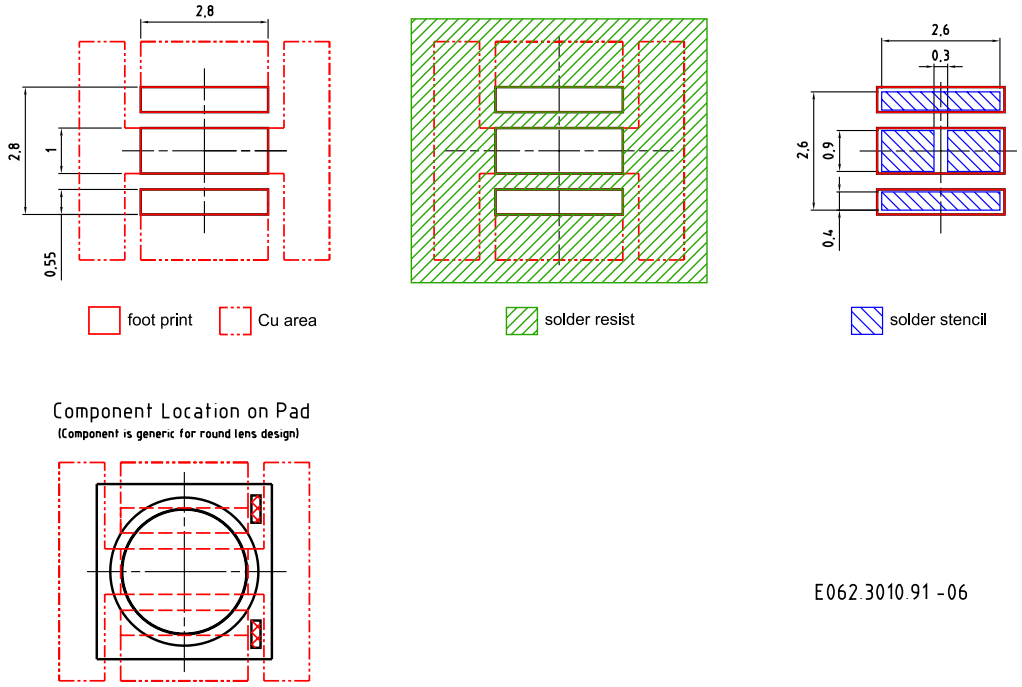

For superior solder joint connectivity results we recommend soldering under standard nitrogen atmosphere. Package not suitable for ultra sonic cleaning.

Not for new design

Downloaded from Arrow.com.

Reflow Soldering Profile

Product complies to MSL Level 2 acc. to JEDEC J-STD-020E

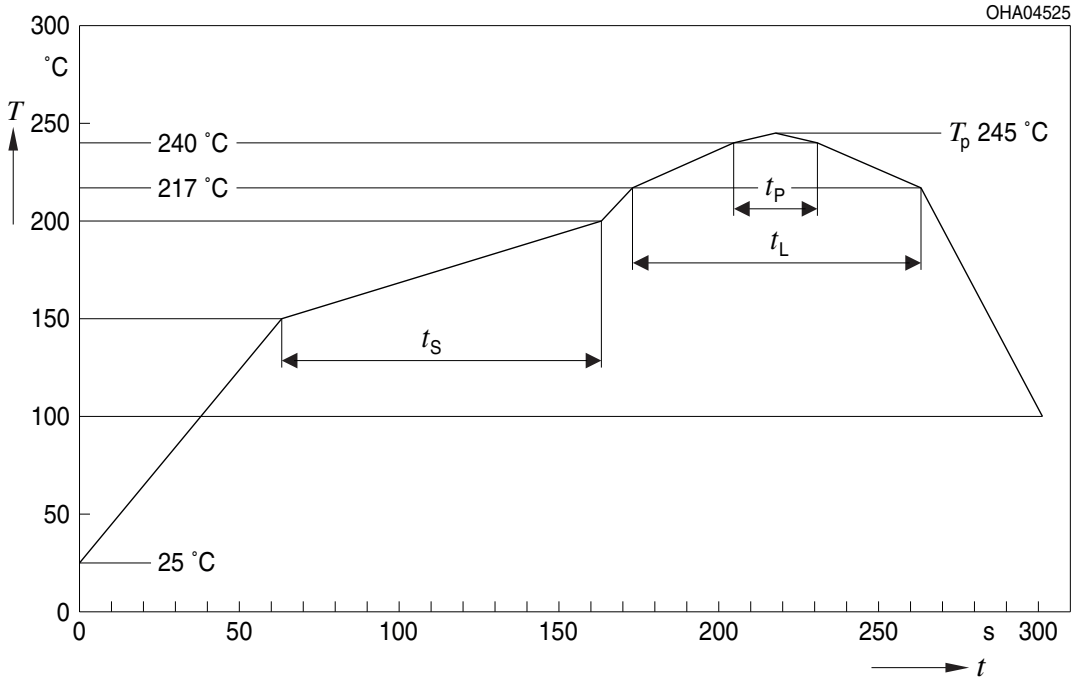

Profile Feature	Symbol	Pb-Free (SnAgCu) Assembly			Unit
		Minimum	Recommendation	Maximum	
Ramp-up rate to preheat*) 25 °C to 150 °C			2	3	K/s
Time t_S T_{Smin} to T_{Smax}	t_S	60	100	120	s
Ramp-up rate to peak*) T_{Smax} to T_P			2	3	K/s
Liquidus temperature	T_L		217		°C
Time above liquidus temperature	t_L		80	100	s
Peak temperature	T_P		245	250	°C
Time within 5 °C of the specified peak temperature T_P - 5 K	t_P	10	20	30	s
Ramp-down rate* T_P to 100 °C			3	4	K/s
Time 25 °C to T_P				480	s

All temperatures refer to the center of the package, measured on the top of the component
* slope calculation DT/Dt: Dt max. 5 s; fulfillment for the whole T-range

Not for new design

Downloaded from Arrow.com.

Taping [10)]

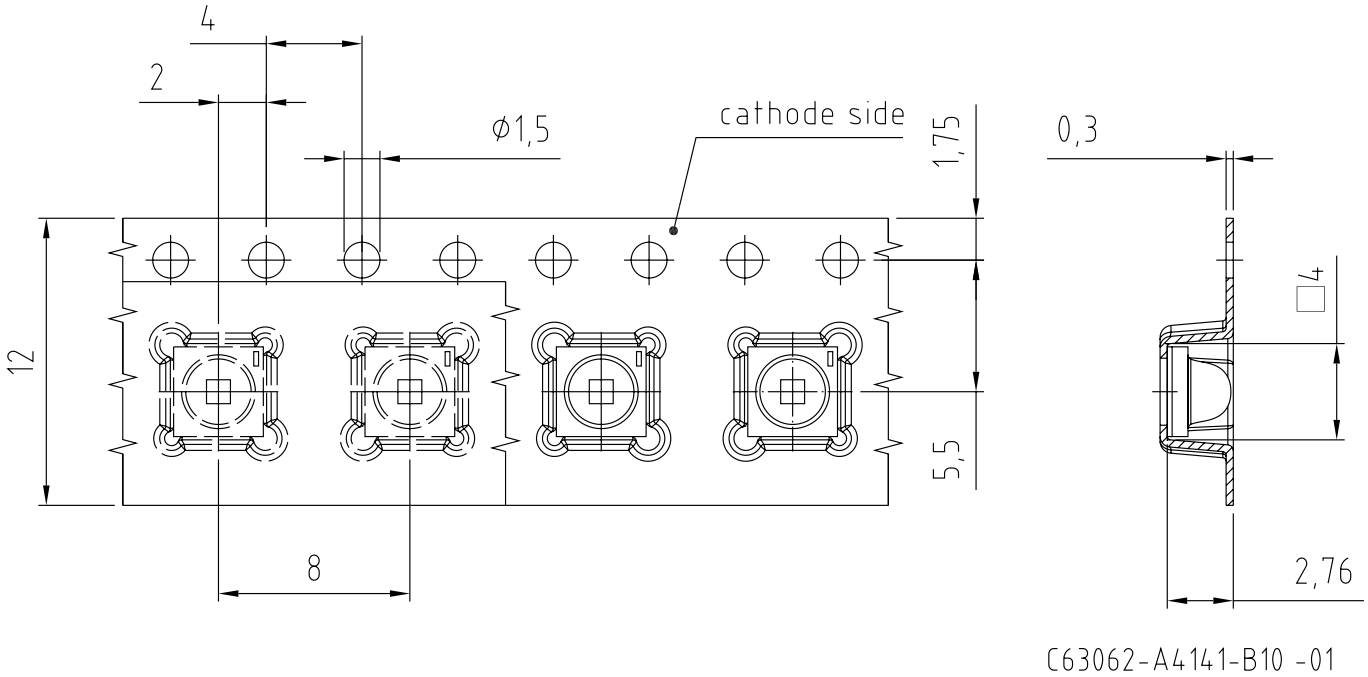

Not for new design

Downloaded from Arrow.com.

Tape and Reel [11)]

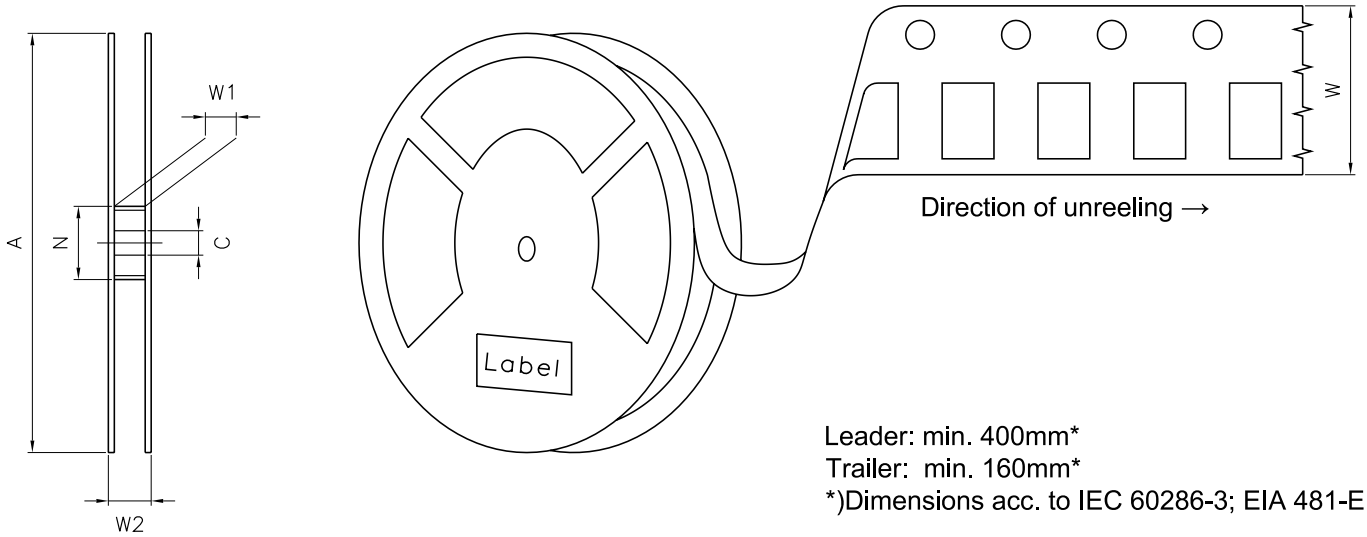

Leader: min. 400mm*
Trailer: min. 160mm*
*)Dimensions acc. to IEC 60286-3; EIA 481-E

Reel Dimensions

A	W	N_{min}	W_1	$W_{2\,max}$	Pieces per PU
180 mm	12 + 0.3 / - 0.1 mm	60 mm	12.4 + 2 mm	18.4 mm	600
330 mm	12 + 0.3 / - 0.1 mm	60 mm	12.4 + 2 mm	18.4 mm	3000

Not for new design

Downloaded from Arrow.com.

Barcode-Product-Label (BPL)

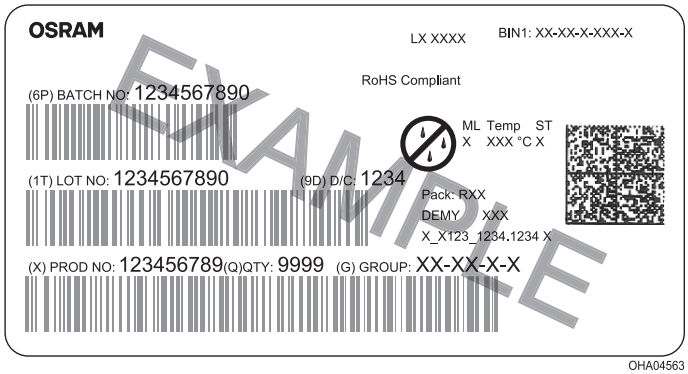

Dry Packing Process and Materials [10)]

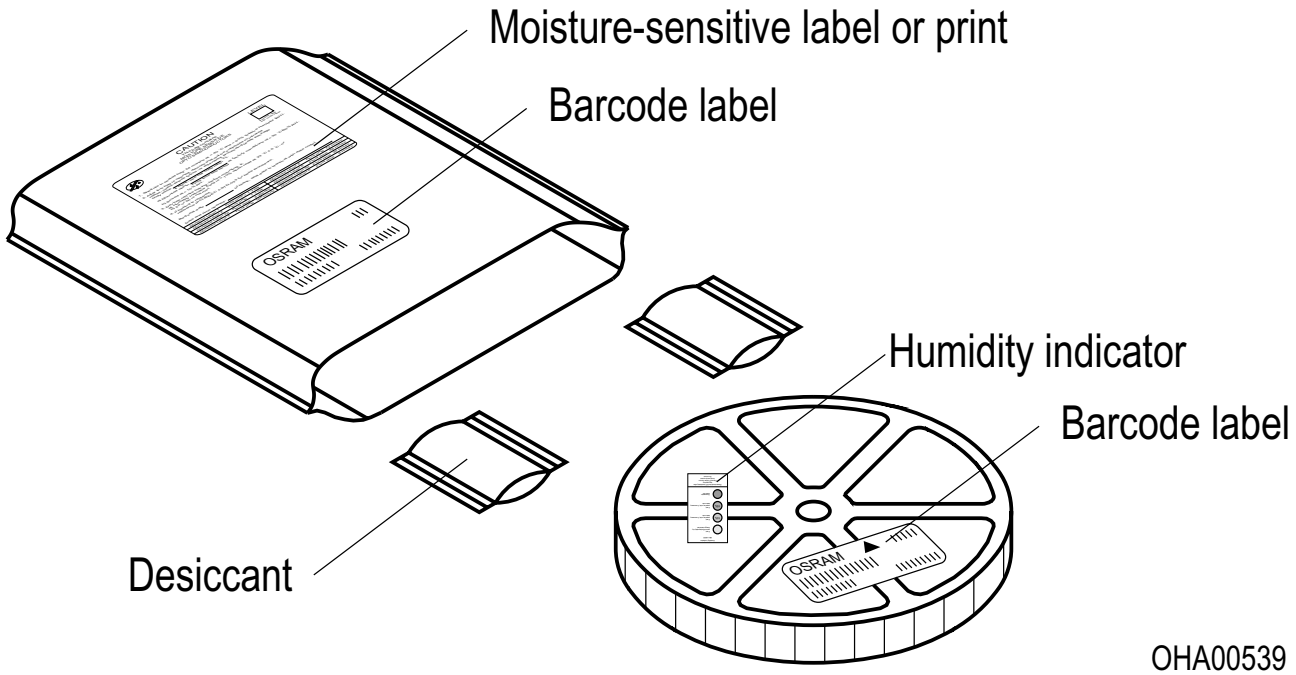

Moisture-sensitive product is packed in a dry bag containing desiccant and a humidity card according JEDEC-STD-033.

Not for new design

Downloaded from Arrow.com.

Notes

The evaluation of eye safety occurs according to the standard IEC 62471:2006 (photo biological safety of lamps and lamp systems). Within the risk grouping system of this IEC standard, the device specified in this data sheet falls into **exempt risk group - Exempt**.

Subcomponents of this device contain, in addition to other substances, metal filled materials including silver. Metal filled materials can be affected by environments that contain traces of aggressive substances. Therefore, we recommend that customers minimize device exposure to aggressive substances during storage, production, and use. Devices that showed visible discoloration when tested using the described tests above did show no performance deviations within failure limits during the stated test duration. Respective failure limits are described in the IEC60810.

For further application related information please visit https://ams-osram.com/support/application-notes

Not for new design

Downloaded from Arrow.com.

Disclaimer

Attention please!

The information describes the type of component and shall not be considered as assured characteristics. Terms of delivery and rights to change design reserved. Due to technical requirements components may contain dangerous substances.
For information on the types in question please contact our Sales Organization.
If printed or downloaded, please find the latest version on our website.

Packing

Please use the recycling operators known to you. We can also help you – get in touch with your nearest sales office. By agreement we will take packing material back, if it is sorted. You must bear the costs of transport. For packing material that is returned to us unsorted or which we are not obliged to accept, we shall have to invoice you for any costs incurred.

Product and functional safety devices/applications or medical devices/applications

Our components are not developed, constructed or tested for the application as safety relevant component or for the application in medical devices.
Our products are not qualified at module and system level for such application.

In case buyer – or customer supplied by buyer – considers using our components in product safety devices/ applications or medical devices/applications, buyer and/or customer has to inform our local sales partner immediately and we and buyer and /or customer will analyze and coordinate the customer-specific request between us and buyer and/or customer.

Not for new design

Downloaded from Arrow.com.

Glossary

1) **Radiant intensity:** Measured at a solid angle of Ω = 0.01 sr

2) **Brightness:** The brightness values are measured with a tolerance of ±11%.

3) **Reverse Operation:** This product is intended to be operated applying a forward current within the specified range. Applying any continuous reverse bias or forward bias below the voltage range of light emission shall be avoided because it may cause migration which can change the electro-optical characteristics or damage the LED.

4) **Wavelength:** The wavelengths are measured with a tolerance of ±1 nm.

5) **Forward Voltage:** The forward voltages are measured with a tolerance of ±0.1 V.

6) **Total radiant flux:** Measured with integrating sphere.

7) **Thermal resistance:** junction - soldering point, of the device only, mounted on an ideal heatsink (e.g. metal block)

8) **Typical Values:** Due to the special conditions of the manufacturing processes of semiconductor devices, the typical data or calculated correlations of technical parameters can only reflect statistical figures. These do not necessarily correspond to the actual parameters of each single product, which could differ from the typical data and calculated correlations or the typical characteristic line. If requested, e.g. because of technical improvements, these typ. data will be changed without any further notice.

9) **Testing temperature:** TA = 25°C (unless otherwise specified)

10) **Tolerance of Measure:** Unless otherwise noted in drawing, tolerances are specified with ±0.1 and dimensions are specified in mm.

11) **Tape and Reel:** All dimensions and tolerances are specified acc. IEC 60286-3 and specified in mm.

Not for new design

Downloaded from Arrow.com.

Revision History

Version	Date	Change
1.0	2019-09-05	Initial Version
1.1	2020-08-26	Schematic Transportation Box Dimensions of Transportation Box
1.2	2021-04-09	Ordering Information Reel Dimensions
1.3	2023-01-18	Characteristics
1.4	2023-09-28	Ordering Information Dimensional Drawing Further Information Electro - Optical Characteristics (Diagrams)
1.5	2025-07-23	Applications
1.6	2026-01-09	Further Information
1.7	2026-05-12	Not for new design

Not for new design

Downloaded from Arrow.com.

Not for new design

EU RoHS and China RoHS compliant product
此产品符合欧盟 RoHS 指令的要求；
按照中国的相关法规和标准，
不含有毒有害物质或元素。

Published by ams-OSRAM AG
Tobelbader Strasse 30, 8141 Premstaetten, Austria
Phone +43 3136 500-0
ams-osram.com
© All rights reserved

Downloaded from Arrow.com.