LED Driver with I²C Compatible and 3-wire Serial Interface for 5×6 LEDs in Dot Matrix

BU26507GUL

●General Description

BU26507GUL is "Matrix LED Driver" that is the most suitable for the cellular phone.
It can control 5x6 (30 dot) LED Matrix by internal 5-channel PMOS SWs and 6-channel LED drivers.
It can control the luminance and firefly lighting of the LED matrix by the setting of the internal register.
It supports SPI and I²C interface.
It adopts the very thin CSP package that is the most suitable for the slim phone.

●Features

- LED Matrix driver (7x17)
  - It has 5-channel PMOS SWs and 6-channel current drivers with 1/5 timing driven sequentially.
  - Put ON/OFF (for every dot)
  - The current drivers can drive from 0 to 20.00mA current with "16"steps(for every dot)(ISET=100kΩ)
  - The current drivers can drive maximum 42.5mA/Line(ISET=47kΩ)
  - 64 steps of the luminance control by PWM (common setting for all dots)
  - Easy register setting by A/B 2-side map for each dot.
  - Automatic Slope function
  - Cycle time, Slope time can be set for each dot.
  - 8-direction automatic scroll function.

●Features - continued

- Interface
  - SPI and I²C BUS FS mode（max 400kHz）Compatibility
  - For I²C mode, I²C Device address is selectable (74h or 75h)
- Thermal shutdown

●Key Specification

- VBAT input voltage: 2.7V to 5.5V
- Oscillator frequency: 1.2MHz(Typ.)
- Operating temperature range: -40℃ to +85℃

●Package W(Typ.) x D(Typ.) x H(Max.)

VCSP50L2: 2.50mm x 2.50mm x 0.55mm

●Typical Application Circuit

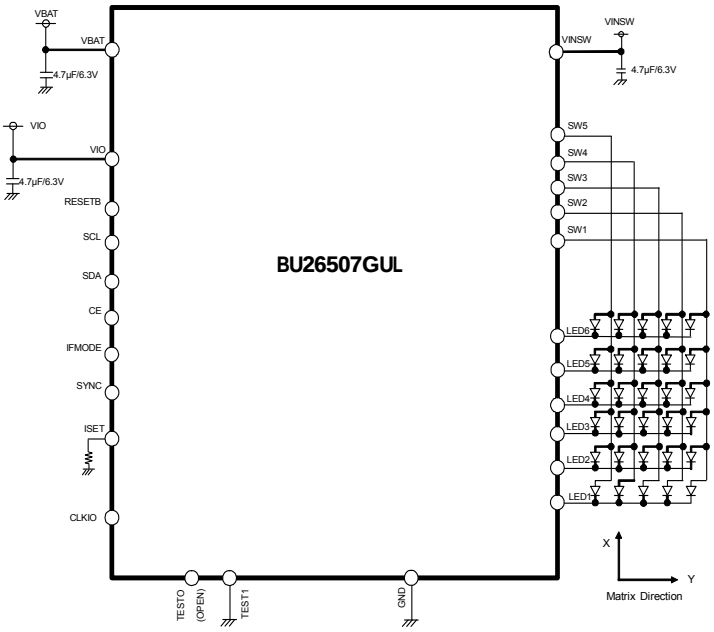

●Pin Configuration [Bottom View]

E	TEST1	SCL	SDA	SW5	SW4
D	CE	RESETB	SYNC	SW3	VINSW
C	VIO	IFMODE	TESTO	SW2	SW1
B	CLKIO	ISET	LED2	LED4	LED5
A	VBAT	LED1	LED3	GND	LED6
	1	2	3	4	5

Index

○Product structure：Silicon monolithic integrated circuit ○This product is not designed protection against radioactive rays

© 2013 ROHM Co., Ltd. All rights reserved.

Downloaded from Arrow.com.

●**Absolute Maximum Ratings** (Ta=25 °C)

Parameter	Symbol	Limits	Unit
Terminal voltage	VMAX	7	V
Power Dissipation (note)	Pd	790	mW
Operating Temperature Range	Topr	-40 to +85	℃
Storage Temperature Range	Tstg	-55 to +125	℃

Note) Power dissipation deleting is 7.9mW/ °C , when it's used in over 25 °C.
(ROHM's standard board has been mounted.)
The power dissipation of the IC has to be less than the one of the package.

●**Recommended Operating Ratings** (VBAT≥VIO, Ta=-40 to 85 °C)

Parameter	Symbol	Limits	Unit
VBAT input voltage	VBAT	2.7 to 5.5	V
VINSW input voltage	VINSW	2.7 to 5.5	V
VIO pin voltage	VIO	1.65 to 3.3	V

●**Electrical Characteristics**
(Unless otherwise specified, Ta=25°C, VBAT=3.6V, VINSW=3.6V, VIO=1.8V)

Parameter	Symbol	Limit			Unit	Condition
		Min.	Typ.	Max.		
[Circuit Current]						
VBAT Circuit current 1	IBAT1	-	0	3.0	μA	RESETB=0V, VIO=0V
VBAT Circuit current 2	IBAT2	-	0.5	5.0	μA	RESETB=0V, VIO=1.8V
VBAT Circuit current 3	IBAT3	-	0.8	1.4	mA	When LED1-6 are active with default settings.
[UVLO]						
UVLO Threshold	VUVLO	-	2.1	2.5	V	VBAT falling
UVLO Hysteresis	VHYUVLO	50	-	-	mV	
[LED Driver] (LED1-6)						
Maximum output current	ILEDMax1	-	20.00	-	mA	LED1-6 ,ISET＝100kΩ
	ILEDMax2	-	42.50	-	mA	LED1-6 ,ISET＝47kΩ
Output current	ILED	9.92	10.67	11.41	mA	I=10.67mA setting, VLED=1V,ISET=100 kΩ
LED current Matching	ILEDMT	-	-	5	%	ILEDMT= (ILEDMax-ILEDMin)/ (ILEDMax+ILEDMin) I=10.67mA setting, VLED=1V
Driver pin voltage range	VLED	0.2	-	VBAT - 1.4	V	ISET=100 kΩ
LED OFF Leak current	ILKLED	-	-	1.0	μA	
[PMOS switch]						
Leak current at OFF	ILEAKP	-	-	1.0	μA	
Resistor at ON	RonP	-	1.0	-	Ω	Isw=60mA, VINSW=4.5V
[OSC]						
OSC frequency	fosc	0.96	1.2	1.44	MHz	
[CE, SYNC, IFMODE]						
L level input voltage	VIL1	-0.3	-	0.25 x VIO	V	
H level input voltage	VIH1	0.75 x VIO	-	VIO +0.3	V	
L level input current	IIL1	-	0	1	μA	
H level input current	IIH1	-	0	1	μA	
[SDA, SCL]						
L level input voltage	VIL2	-0.3	-	0.25 x VIO	V	
H level input voltage	VIH2	0.75 x VIO	-	VIO +0.3	V	
Input hysteresis	Vhys	0.05 x VIO	-	-	V	
L level output voltage (for SDA pin)	VOL2	0	-	0.3	V	At 3mA sink current
Input current	Iin1	-3	-	3	μA	Input voltage = from (0.1 x VIO) to (0.9 x VIO)

© 2013 ROHM Co., Ltd. All rights reserved.

Downloaded from Arrow.com.

●**Electrical Characteristics - continued**

(Unless otherwise specified, Ta=25°C, VBAT=3.6V, VINSW=3.6V, VIO=1.8V)

Parameter	Symbol	Limit			Unit	Condition
		Min.	Typ.	Max.		
[RESETB]						
L level input voltage	VIL3	-0.3	-	0.25 x VIO	V	
H level input voltage	VIH3	0.75 x VIO	-	VIO +0.3	V	
Input current	Iin2	-	0	1	μA	Input voltage = from (0.1 x VIO) to (0.9 x VIO)
[CLKIO(OUTPUT)]						
L level output voltage	VOL1	-	-	0.4	V	IOL=2mA
H level output voltage	VOH1	0.75 x VIO	-	-	V	IOH=-2mA
[CLKIO(INPUT)]						
L level input voltage	VIL4	-0.3	-	0.25 x VIO	V	
H level input voltage	VIH4	0.75 x VIO	-	VIO +0.3	V	
Input current	Iin3	-	3.6	10	μA	input voltage=1.8V

(Unless otherwise specified, Ta=25°C, VBAT=3.6V, VINSW=3.6V, VIO=1.8V)

Parameter	Symbol	Limit			Unit	Condition
		Min	Typ	Max		
SCL cycle time	tscyc	76	-	-	ns	
H period of SCL cycle	twhc	35	-	-	ns	
L period of SCL cycle	twlc	35	-	-	ns	
SDA setup time	tss	38	-	-	ns	
SDA hold time	tsh	38	-	-	ns	
Read and Write interval	tcsw	2.1	-	-	μs	*1
Read and Write interval (after A or B map access)		ECLK x 2	-	-	s	*2
CE setup time	tcss	55	-	-	ns	
CE hold time	tcgh	55	-	-	ns	

*1 When it used internal clock.
*2 When it used external clock. ECLK means the cycle of external PWM clock.)

(Unless otherwise specified, Ta=25°C, VBAT=3.6V, VINSW=3.6V, VIO=1.8V)

Parameter	Symbol	Standard-mode			Fast-mode			Unit
		Min.	Typ.	Max.	Min.	Typ.	Max.	
【I^2C BUS format】								
SCL clock frequency	fSCL	0	-	100	0	-	400	kHz
LOW period of the SCL clock	tLOW	4.7	-	-	1.3	-	-	μs
HIGH period of the SCL clock	tHIGH	4.0	-	-	0.6	-	-	μs
Hold time (repeated) START condition After this period, the first clock is generated	tHD;STA	4.0	-	-	0.6	-	-	μs
Set-up time for a repeated START condition	tSU;STA	4.7	-	-	0.6	-	-	μs
Data hold time	tHD;DAT	0	-	3.45	0	-	0.9	μs
Data set-up time	tSU;DAT	250	-	-	100	-	-	ns
Set-up time for STOP condition	tSU;STO	4.0	-	-	0.6	-	-	μs
Bus free time between a STOP and START condition	tBUF	4.7	-	-	1.3	-	-	μs

© 2013 ROHM Co., Ltd. All rights reserved.

Downloaded from Arrow.com.

●**Pin Descriptions**

No	Ball No.	Pin Name	I/O	Pull down [Ω]	Unused processing setting	ESD Diode		Functions	Equivalent Circuit
						For Power	For Ground		
1	D5	VINSW	-	-	VINSW	−	GND	Power supply for SW1-5	A
2	A1	VBAT	-	-	VBAT	−	GND	Battery is connected	A
3	C1	VIO	-	-	VIO	VBAT	GND	I/O Power supply is connected	M
4	D2	RESETB	I	-	GND	VBAT	GND	Reset input pin (L: reset, H: reset cancel)	D
5	E2	SCL	I	-	GND	VBAT	GND	SPI, I^2C CLK input pin	D
6	E3	SDA	I/O	-	GND	VBAT	GND	SPI DATA input / I^2C DATA input-output pin	F
7	D1	CE	I	-	GND	VBAT	GND	SPI ENABLE pin(H;ENABLE), or I^2C slave address selection (L: 74h, H: 75h)	D
8	C2	IFMODE	I	-	GND	VBAT	GND	I^2C/SPI select pin (L: I^2C, H: SPI)	D
9	D3	SYNC	I	-	GND	VBAT	GND	External synchronous input pin	D
10	B2	ISET	I	-	OPEN	VBAT	GND	LED Constant Current Driver Current setting pin	J
11	B1	CLKIO	I/O	500k	OPEN	VBAT	GND	Reference CLK in/out pin	L
12	C3	TESTO	O	-	OPEN	VBAT	GND	Test output pin	H
13	E1	TEST1	I	100k	GND	VBAT	GND	Test input pin 1	E
14	A4	GND	-	-	GND	VBAT	-	Ground	B
15	A2	LED1	O	-	GND	−	GND	LED1 driver output	K
16	B3	LED2	O	-	GND	−	GND	LED2 driver output	K
17	A3	LED3	O	-	GND	−	GND	LED3 driver output	K
18	B4	LED4	O	-	GND	−	GND	LED4 driver output	K
19	B5	LED5	O	-	GND	−	GND	LED5 driver output	K
20	A5	LED6	O	-	GND	−	GND	LED6 driver output	K
21	C5	SW1	O	-	VINSW	VINSW	GND	P-MOS SW 1 output	C
22	C4	SW2	O	-	VINSW	VINSW	GND	P-MOS SW2 output	C
23	D4	SW3	O	-	VINSW	VINSW	GND	P-MOS SW3 output	C
24	E5	SW4	O	-	VINSW	VINSW	GND	P-MOS SW4 output	C
25	E4	SW5	O	-	VINSW	VINSW	GND	P-MOS SW 5 output	C

* Please connect the unused LED pins to the ground.
* It is prohibition to set the registers for unused LED.

© 2013 ROHM Co., Ltd. All rights reserved.

Downloaded from Arrow.com.

●**Pin ESD Type**

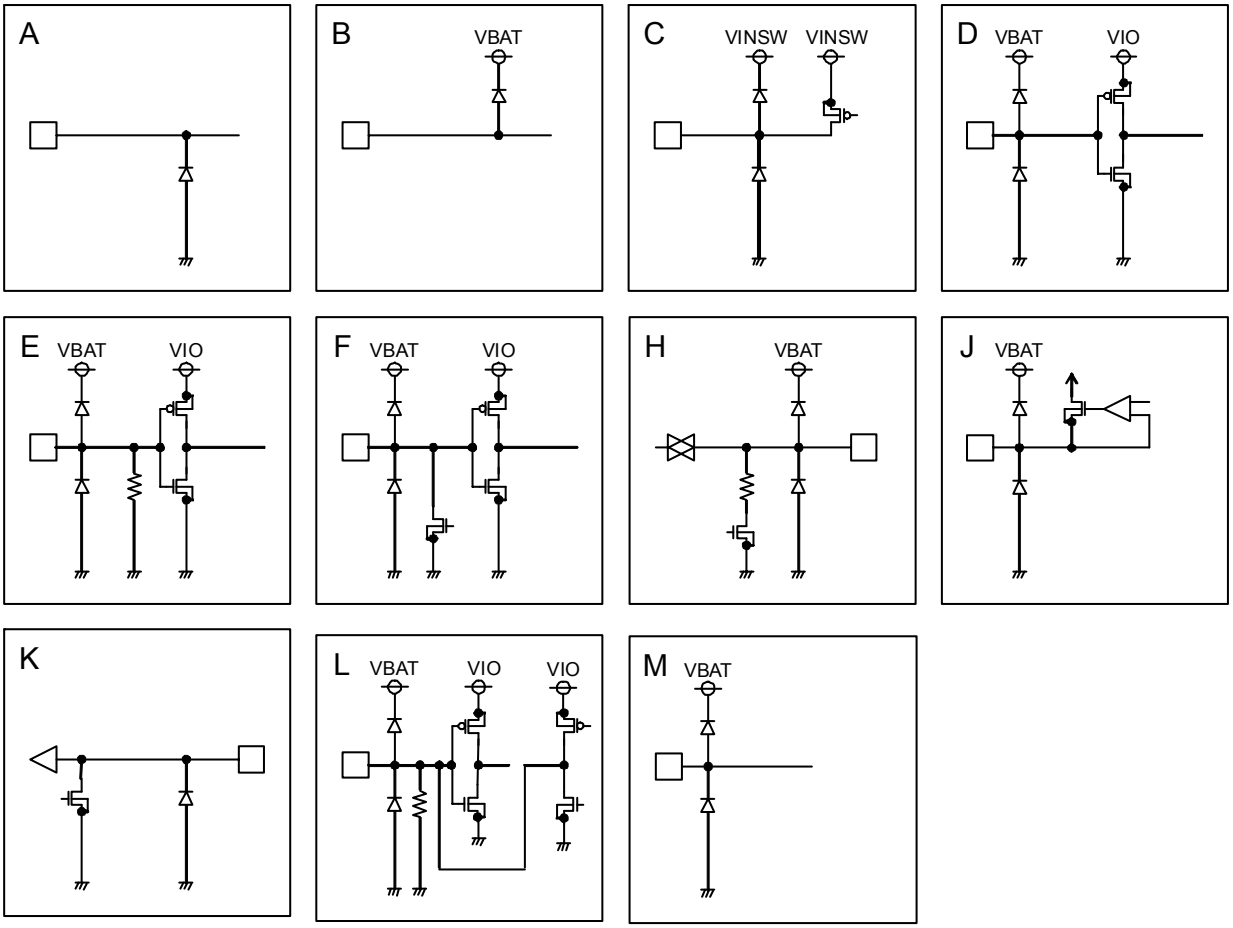

Figure 1. Pin ESD Type

© 2013 ROHM Co., Ltd. All rights reserved.

Downloaded from Arrow.com.

●**Block Diagram**

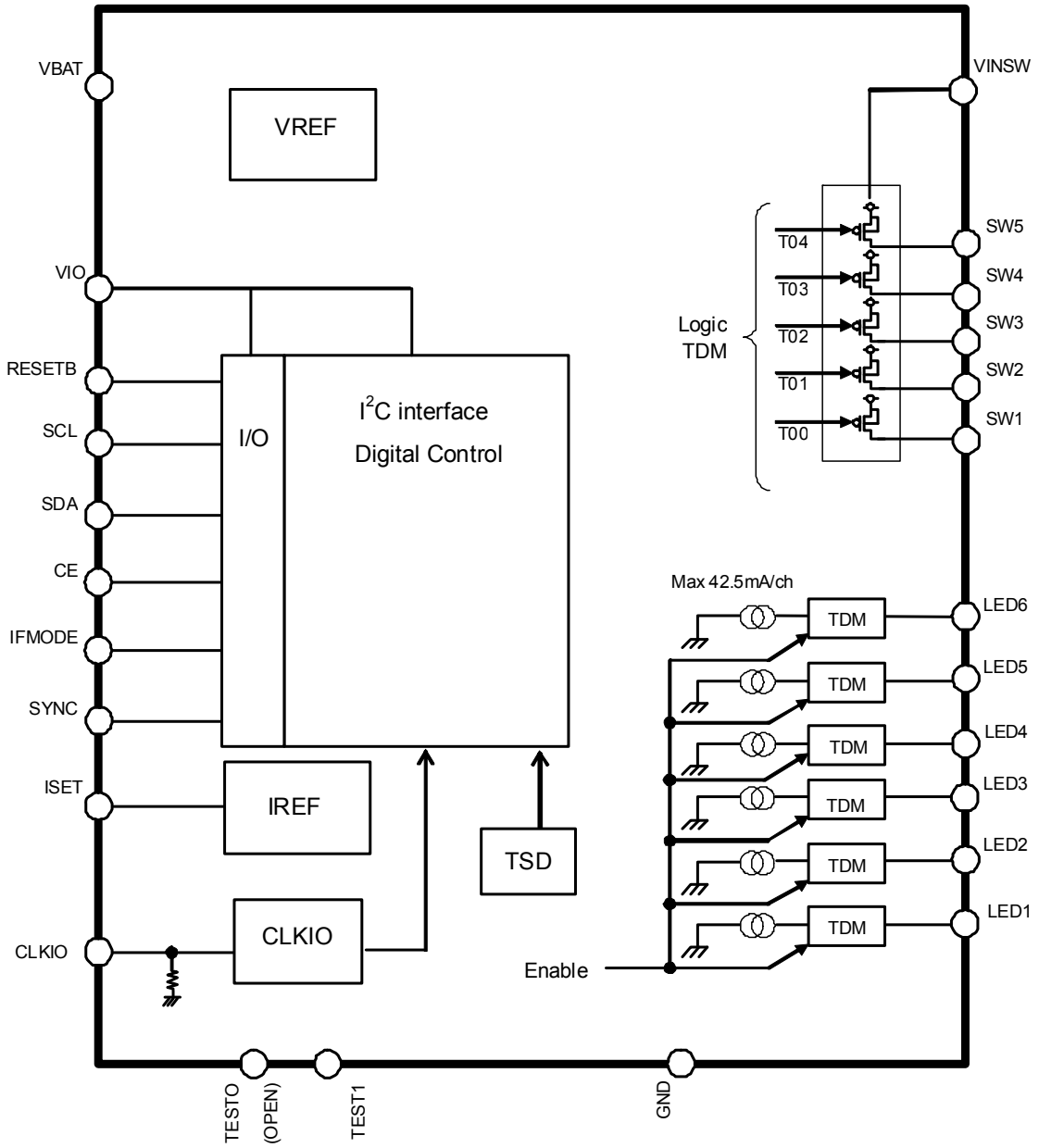

Figure 2. Pin number 25pin

© 2013 ROHM Co., Ltd. All rights reserved.

Downloaded from Arrow.com.

●Serial Interface

1. SPI format

- When IFMODE is set to “H”, it can interface with SPI format.
- The serial interface is three terminals (serial clock terminal (SCL), serial data input terminal (SDA), and chip selection input terminal (CE)).

（1）Write operation

- Data is taken into an internal shift register with rising edge of CLK. (Max of the frequency is 13MHz.)
- The receive data becomes ENABLE in the “H" section of CE. (Active “H".)
- The transmit data is forwarded (with MSB-First) in the order of write command “0”(1bit), the control register address (7bit) and data (8bit).

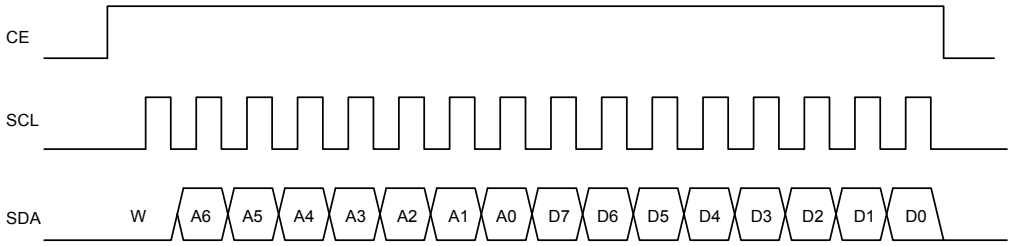

Figure 3. Writing format

（2）Timing diagram

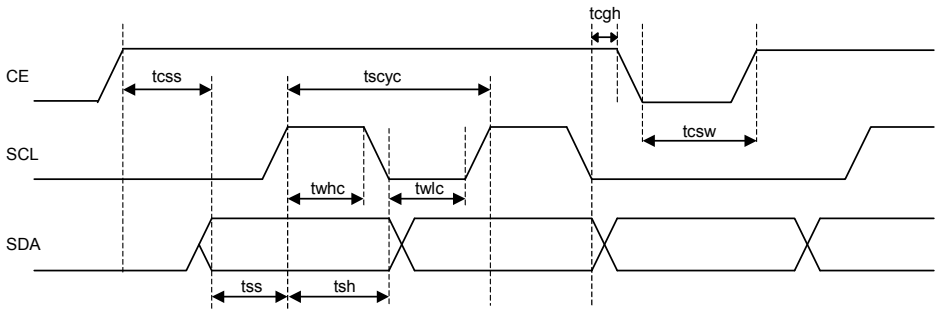

Figure 4. Timing diagram (SPI format)

2. I^2C BUS format

When IFMODE is set to “L”, it can interface with I^2C BUS format.

(1) Slave address

CE	A7	A6	A5	A4	A3	A2	A1	R/W
L	1	1	1	0	1	0	0	0
H	1	1	1	0	1	0	1	

(2) Bit Transfer

SCL transfers 1-bit data during H. During H of SCL, SDA cannot be changed at the time of bit transfer. If SDA changes while SCL is H, START conditions or STOP conditions will occur and it will be interpreted as a control signal.

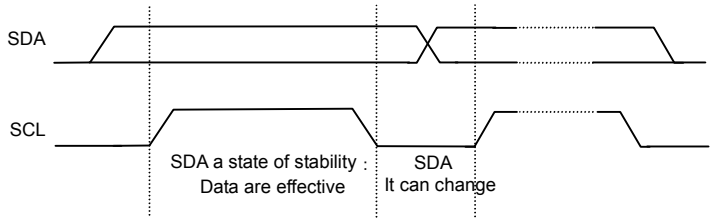

Figure 5. Bit transfer (I^2C format)

© 2013 ROHM Co., Ltd. All rights reserved.

Downloaded from Arrow.com.

●**Serial Interface - continued**

(3) START and STOP condition

When SDA and SCL are H, data is not transferred on the I^{2}C- bus. This condition indicates, if SDA changes from H to L while SCL has been H, it will become START (S) conditions, and an access start, if SDA changes from L to H while SCL has been H, it will become STOP (P) conditions and an access end.

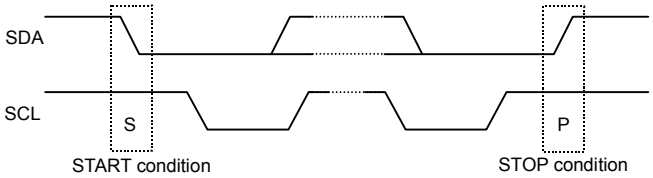

Figure 6. START/STOP condition (I^{2}C format)

(4) Acknowledge

It transfers data 8 bits each after the occurrence of START condition. A transmitter opens SDA after transfer 8bits data, and a receiver returns the acknowledge signal by setting SDA to L.

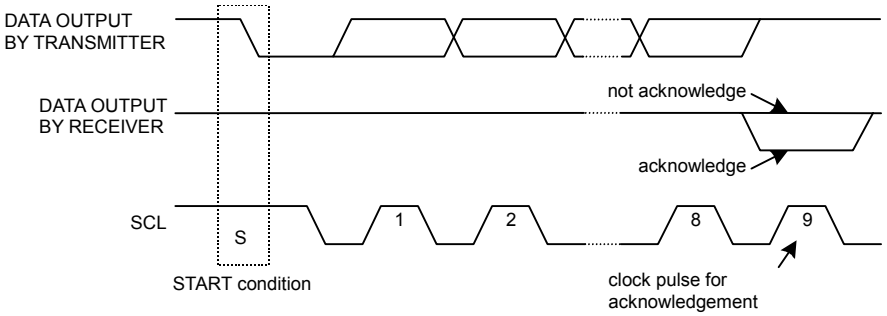

Figure 7. Acknowledge (I^{2}C format)

(5) Writing protocol

A register address is transferred by the next 1 byte that transferred the slave address and the write-in command. The 3rd byte writes data in the internal register written in by the 2nd byte, and after 4th byte or, the increment of register address is carried out automatically. However, when a register address turns into the last address (77h), it is set to 00h by the next transmission. After the transmission end, the increment of the address is carried out.

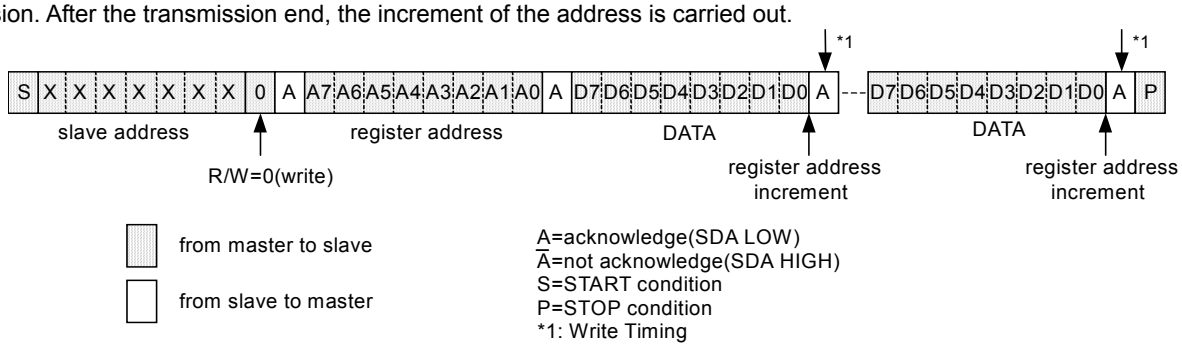

(6) Timing diagram

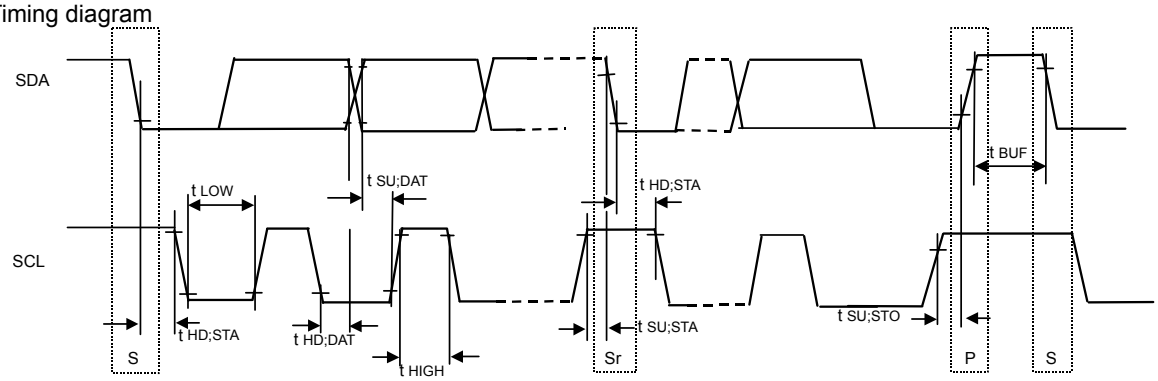

Figure 8. Timing diagram (I^{2}C format)

© 2013 ROHM Co., Ltd. All rights reserved.

Downloaded from Arrow.com.

●Register List

* Please be sure to write “0” in the register which is not assigned.
* It is prohibition to write data to the address which is not assigned.

Control register

Address	default	D7	D6	D5	D4	D3	D2	D1	D0	Block	R/W	Remark
00h	00h	-	-	-	-	-	-	-	SFTRST	RESET	W	Software Reset
01h	00h	-	-	-	-	OSCEN	-	-	-	OSC	W	OSC ON/OFF control
11h	00h	-	-	LED6ON	LED5ON	LED4ON	LED3ON	LED2ON	LED1ON	LED driver	W	LED1-6 ENABLE
20h	00h	-	-	PWMSET[5:0]						PWM	W	LED1-6 PWM setting
21h	00h	CLKSEL[1:0]		-	-	SYNCACT	SYNCON	CLKOUT	CLKIN	CLK	W	CLK selection, SYNC operation control
2Dh	00h	-	-	-	SLP[1:0]		PWMEN	SLPEN	SCLEN	MATRIX	W	PWM,SLOPE,SCROL ON/OFF setting
2Eh	00h	-	-	-	-	-	-	-	SCLRST		W	Reset SCROL
2Fh	00h	SCLSPEEDUP	SCLSPEED[2:0]			UP	DOWN	RIGHT	LEFT		W	Scroll setting
30h	00h	-	-	-	-	-	-	-	START		W	LED matrix control
31h	0h	-	-	-	-	-	-	CLRB	CLRA		W	Matrix data clear
7Fh	00h	-	-	-	-	-	IAB	OAB	RMCG	RMAP	W	Resistor map change

A-pattern register

Address	default	D7	D6	D5	D4	D3	D2	D1	D0	Block	R/W	Remark
01h	08h	SCYCA00[1:0]		SDLYA00[1:0]		ILEDA00SET[3:0]				MATRIX DATA	W	Data for Matrix 00(DA00)
02h	08h	SCYCA01[1:0]		SDLYA01[1:0]		ILEDA01SET[3:0]					W	Data for Matrix 01(DA01)
03h	08h	SCYCA02[1:0]		SDLYA02[1:0]		ILEDA02SET[3:0]					W	Data for Matrix 02(DA02)
04h	08h	SCYCA03[1:0]		SDLYA03[1:0]		ILEDA03SET[3:0]					W	Data for Matrix 03(DA03)
05h	08h	SCYCA04[1:0]		SDLYA04[1:0]		ILEDA04SET[3:0]					W	Data for Matrix 04(DA04)
06h	08h	SCYCA10[1:0]		SDLYA10[1:0]		ILEDA10SET[3:0]					W	Data for Matrix 10(DA10)
07h	08h	SCYCA11[1:0]		SDLYA11[1:0]		ILEDA11SET[3:0]					W	Data for Matrix 11(DA11)
08h	08h	SCYCA12[1:0]		SDLYA12[1:0]		ILEDA12SET[3:0]					W	Data for Matrix 12(DA12)
09h	08h	SCYCA13[1:0]		SDLYA13[1:0]		ILEDA13SET[3:0]					W	Data for Matrix 13(DA13)
0Ah	08h	SCYCA14[1:0]		SDLYA14[1:0]		ILEDA14SET[3:0]					W	Data for Matrix 14(DA14)
0Bh	08h	SCYCA20[1:0]		SDLYA20[1:0]		ILEDA20SET[3:0]					W	Data for Matrix 20(DA20)
0Ch	08h	SCYCA21[1:0]		SDLYA21[1:0]		ILEDA21SET[3:0]					W	Data for Matrix 21(DA21)
0Dh	08h	SCYCA22[1:0]		SDLYA22[1:0]		ILEDA22SET[3:0]					W	Data for Matrix 22(DA22)
0Eh	08h	SCYCA23[1:0]		SDLYA23[1:0]		ILEDA23SET[3:0]					W	Data for Matrix 23(DA23)
0Fh	08h	SCYCA24[1:0]		SDLYA24[1:0]		ILEDA24SET[3:0]					W	Data for Matrix 24(DA24)
10h	08h	SCYCA30[1:0]		SDLYA30[1:0]		ILEDA30SET[3:0]					W	Data for Matrix 30(DA30)
11h	08h	SCYCA31[1:0]		SDLYA31[1:0]		ILEDA31SET[3:0]					W	Data for Matrix 31(DA31)
12h	08h	SCYCA32[1:0]		SDLYA32[1:0]		ILEDA32SET[3:0]					W	Data for Matrix 32(DA32)
13h	08h	SCYCA33[1:0]		SDLYA33[1:0]		ILEDA33SET[3:0]					W	Data for Matrix 33(DA33)
14h	08h	SCYCA34[1:0]		SDLYA34[1:0]		ILEDA34SET[3:0]					W	Data for Matrix 34(DA34)
15h	08h	SCYCA40[1:0]		SDLYA40[1:0]		ILEDA40SET[3:0]					W	Data for Matrix 40(DA40)
16h	08h	SCYCA41[1:0]		SDLYA41[1:0]		ILEDA41SET[3:0]					W	Data for Matrix 41(DA41)
17h	08h	SCYCA42[1:0]		SDLYA42[1:0]		ILEDA42SET[3:0]					W	Data for Matrix 42(DA42)
18h	08h	SCYCA43[1:0]		SDLYA43[1:0]		ILEDA43SET[3:0]					W	Data for Matrix 43(DA43)
19h	08h	SCYCA44[1:0]		SDLYA44[1:0]		ILEDA44SET[3:0]					W	Data for Matrix 44(DA44)
1Ah	08h	SCYCA50[1:0]		SDLYA50[1:0]		ILEDA50SET[3:0]					W	Data for Matrix 50(DA50)
1Bh	08h	SCYCA51[1:0]		SDLYA51[1:0]		ILEDA51SET[3:0]					W	Data for Matrix 51(DA51)
1Ch	08h	SCYCA52[1:0]		SDLYA52[1:0]		ILEDA52SET[3:0]					W	Data for Matrix 52(DA52)
1Dh	08h	SCYCA53[1:0]		SDLYA53[1:0]		ILEDA53SET[3:0]					W	Data for Matrix 53(DA53)
1Eh	08h	SCYCA54[1:0]		SDLYA54[1:0]		ILEDA54SET[3:0]					W	Data for Matrix 54(DA54)

© 2013 ROHM Co., Ltd. All rights reserved.

Downloaded from Arrow.com.

●**Register List - continued**

B-pattern register

Address	default	D7	D6	D5	D4	D3	D2	D1	D0	Block	R/W	Remark
01h	08h	SCYCB00[1:0]		SDLYB00[1:0]		ILEDB00SET[3:0]				MATRIX DATA	W	Data for Matrix 00(DB00)
02h	08h	SCYCB01[1:0]		SDLYB01[1:0]		ILEDB01SET[3:0]					W	Data for Matrix 01(DB01)
03h	08h	SCYCB02[1:0]		SDLYB02[1:0]		ILEDB02SET[3:0]					W	Data for Matrix 02(DB02)
04h	08h	SCYCB03[1:0]		SDLYB03[1:0]		ILEDB03SET[3:0]					W	Data for Matrix 03(DB03)
05h	08h	SCYCB04[1:0]		SDLYB04[1:0]		ILEDB04SET[3:0]					W	Data for Matrix 04(DB04)
06h	08h	SCYCB10[1:0]		SDLYB10[1:0]		ILEDB10SET[3:0]					W	Data for Matrix 10(DB10)
07h	08h	SCYCB11[1:0]		SDLYB11[1:0]		ILEDB11SET[3:0]					W	Data for Matrix 11(DB11)
08h	08h	SCYCB12[1:0]		SDLYB12[1:0]		ILEDB12SET[3:0]					W	Data for Matrix 12(DB12)
09h	08h	SCYCB13[1:0]		SDLYB13[1:0]		ILEDB13SET[3:0]					W	Data for Matrix 13(DB13)
0Ah	08h	SCYCB14[1:0]		SDLYB14[1:0]		ILEDB14SET[3:0]					W	Data for Matrix 14(DB14)
0Bh	08h	SCYCB20[1:0]		SDLYB20[1:0]		ILEDB20SET[3:0]					W	Data for Matrix 20(DB20)
0Ch	08h	SCYCB21[1:0]		SDLYB21[1:0]		ILEDB21SET[3:0]					W	Data for Matrix 21(DB21)
0Dh	08h	SCYCB22[1:0]		SDLYB22[1:0]		ILEDB22SET[3:0]					W	Data for Matrix 22(DB22)
0Eh	08h	SCYCB23[1:0]		SDLYB23[1:0]		ILEDB23SET[3:0]					W	Data for Matrix 23(DB23)
0Fh	08h	SCYCB24[1:0]		SDLYB24[1:0]		ILEDB24SET[3:0]					W	Data for Matrix 24(DB24)
10h	08h	SCYCB30[1:0]		SDLYB30[1:0]		ILEDB30SET[3:0]					W	Data for Matrix 30(DB30)
11h	08h	SCYCB31[1:0]		SDLYB31[1:0]		ILEDB31SET[3:0]					W	Data for Matrix 31(DB31)
12h	08h	SCYCB32[1:0]		SDLYB32[1:0]		ILEDB32SET[3:0]					W	Data for Matrix 32(DB32)
13h	08h	SCYCB33[1:0]		SDLYB33[1:0]		ILEDB33SET[3:0]					W	Data for Matrix 33(DB33)
14h	08h	SCYCB34[1:0]		SDLYB34[1:0]		ILEDB34SET[3:0]					W	Data for Matrix 34(DB34)
15h	08h	SCYCB40[1:0]		SDLYB40[1:0]		ILEDB40SET[3:0]					W	Data for Matrix 40(DB40)
16h	08h	SCYCB41[1:0]		SDLYB41[1:0]		ILEDB41SET[3:0]					W	Data for Matrix 41(DB41)
17h	08h	SCYCB42[1:0]		SDLYB42[1:0]		ILEDB42SET[3:0]					W	Data for Matrix 42(DB42)
18h	08h	SCYCB43[1:0]		SDLYB43[1:0]		ILEDB43SET[3:0]					W	Data for Matrix 43(DB43)
19h	08h	SCYCB44[1:0]		SDLYB44[1:0]		ILEDB44SET[3:0]					W	Data for Matrix 44(DB44)
1Ah	08h	SCYCB50[1:0]		SDLYB50[1:0]		ILEDB50SET[3:0]					W	Data for Matrix 50(DB50)
1Bh	08h	SCYCB51[1:0]		SDLYB51[1:0]		ILEDB51SET[3:0]					W	Data for Matrix 51(DB51)
1Ch	08h	SCYCB52[1:0]		SDLYB52[1:0]		ILEDB52SET[3:0]					W	Data for Matrix 52(DB52)
1Dh	08h	SCYCB53[1:0]		SDLYB53[1:0]		ILEDB53SET[3:0]					W	Data for Matrix 53(DB53)
1Eh	08h	SCYCB54[1:0]		SDLYB54[1:0]		ILEDB54SET[3:0]					W	Data for Matrix 54(DB54)

© 2013 ROHM Co., Ltd. All rights reserved.

Downloaded from Arrow.com.

●Register Map

Address 00H < Software Reset >

Address (Index)	R/W	Bit7	Bit6	Bit5	Bit4	Bit3	Bit2	Bit1	Bit0
00H	W	-	-	-	-	-	-	-	SFTRST
Initial value	00H	-	-	-	-	-	-	-	0

Bit 0 : SFTRST Software Reset
"0" : Reset cancel
"1" : Reset（All register initializing）
* SFTRST register return to 0 automatically.

Address 01H <OSC control >

Address (Index)	R/W	Bit7	Bit6	Bit5	Bit4	Bit3	Bit2	Bit1	Bit0
01H	W	-	-	-	-	OSCEN	-	-	-
Initial value	00H	0	0	0	0	0	0	0	0

Bit 3 : OSCEN OSC block ON/OFF control
"0" : OFF（Initial）
"1" : ON

* This register should not change into "1 "→" 0" at the time of START (30h, D0) register ="1" setup (under lighting operation).
This register must be set to "0" after LED putting out lights ("START register = 0"), and please surely stop an internal oscillation circuit.

Address 11H < LED1-6 ENABLE >

Address (Index)	R/W	Bit7	Bit6	Bit5	Bit4	Bit3	Bit2	Bit1	Bit0
11H	W	-	-	LED6ON	LED5ON	LED4ON	LED3ON	LED2ON	LED1ON
Initial value	00H	0	0	0	0	0	0	0	0

Bit 0 : LED1ON LED1 ON/OFF setting
"0" : LED1 OFF（initial）
"1" : LED1 ON

Bit 1 : LED2ON LED2 ON/OFF setting
"0" : LED2 OFF（initial）
"1" : LED2 ON

Bit 2 : LED3ON LED3 ON/OFF setting
"0" : LED3 OFF（initial）
"1" : LED3 ON

Bit 3 : LED4ON LED4 ON/OFF setting
"0" : LED4 OFF（initial）
"1" : LED4 ON

Bit 4 : LED5ON LED5 ON/OFF setting
"0" : LED5 OFF（initial）
"1" : LED5 ON

Bit 5 : LED6ON LED6 ON/OFF setting
"0" : LED6 OFF（initial）
"1" : LED6 ON

* Current setting follows ILEDAXXSET[3:0] or ILEDBXXSET[3:0] register.
(The "XX" shows the matrix number from "00" to "54". Please refer 5x6 LED Matrix coordinate.)

© 2013 ROHM Co., Ltd. All rights reserved.

Downloaded from Arrow.com.

●**Register Map - continued**

Address 20H < LED1-6 PWM setting >

Address (Index)	R/W	Bit7	Bit6	Bit5	Bit4	Bit3	Bit2	Bit1	Bit0
20H	W	-	-	PWMSET [5:0]					
Initial value	00H	0	0	0	0	0	0	0	0

Bit 5-0 : PWMSET[5:0] LED1-6 PWM DUTY setting

"000000" 0/63＝0%(initial)
"000001" 1/63＝1.59%
:
"100000" 32/63＝50.8%
:
"111110" 62/63＝98.4%
"111111" 63/63＝100%

*Please refer to Description of operation, chapter 2 SYNC operation control

Address 21H <Clock control SYNC operation control>

Address (Index)	R/W	Bit7	Bit6	Bit5	Bit4	Bit3	Bit2	Bit1	Bit0
21H	W	CLKSEL[1:0]		-	-	SYNCACT	SYNCON	CLKOUT	CLKIN
Initial value	00H	0	0	0	0	0	0	0	0

Bit 0 : CLKIN Selection CLK for PWM control

"0" : Internal OSC (initial)
"1" : External CLK input

*When use external clock for TDM, Set OSCEN (01h, D3) register ="1".

Bit 1 : CLKOUT Output CLK ENABLE

"0" : CLK is not output (initial)
"1" : Output selected CLK from CLKOUT pin

*As for CLKIN & CLKOUT, setting change is forbidden under OSCEN (01h, D3) register ="1" and also under clock input to CLKIN terminal.
*CLKIN=CLKOUT=1 is forbidden

Bit 2 : SYNCON SYNC operation ENABLE

"0" : Disable SYNC operation (initial)
"1" : SYNC pin control LED driver ON/OFF

Bit 3 : SYNCACT SYNC operation setting

"0" : When SYNC pin is "L", LED drivers are ON (initial)
"1" : When SYNC pin is "H", LED drivers are ON

Bit 7-6 : CLKSEL[1:0] Select Clock Frequency

"00" : 1.2MHz
"01" : 300kHz
"10" : 150kHz
"11" : 37.5kHz

© 2013 ROHM Co., Ltd. All rights reserved.

Downloaded from Arrow.com.

●**Register Map - continued**

Address 2DH < PWM, SLOPE, SCROLL ON/OFF setting >

Address (Index)	R/W	Bit7	Bit6	Bit5	Bit4	Bit3	Bit2	Bit1	Bit0
2DH	W	-	-	-	SLP[1:0]		PWMEN	SLPEN	SCLEN
Initial value	00H	0	0	0	0	0	0	0	0

Bit 0：SCLEN SCROLL operation ON/OFF setting
"0"：SCROL operation OFF（initial value）
"1"：SCROL operation ON

Bit 1：SLPEN SLOPE operation ON/OFF setting
"0"：SLOPE operation OFF（initial value）
"1"：SLOPE operation ON

Bit 2：PWMEN PWM control at LED1-6ON/OFF setting
"0"：PWM operation is invalid（initial value）
"1"：PWM operation is valid

Bit 4-3：SLP SLOPE setting
"00"：1/4 slope cycle time
"01"：None slope
"10"：1/2 lope cycle time
"11"：1/4 slope cycle time

*Please refer to Description of operation, chapter 2
When start register (Address=30H Bit0) is 1, Don't change SLP[1:0] register.

Address 2EH < Reset scroll >

Address (Index)	R/W	Bit7	Bit6	Bit5	Bit4	Bit3	Bit2	Bit1	Bit0
2EH	W	-	-	-	-	-	-	-	SCLRST
Initial value	00H	0	0	0	0	0	0	0	0

Bit 0：SCLRST Reset scroll state
"0"：Not reset（initial value）
"1"：Reset scroll state
* SCLRST register return to 0 automatically

© 2013 ROHM Co., Ltd. All rights reserved.

Downloaded from Arrow.com.

●**Register Map - continued**

Address 2FH < Scroll setting >

Address (Index)	R/W	Bit7	Bit6	Bit5	Bit4	Bit3	Bit2	Bit1	Bit0
2FH	W	SCL SPEEDUP	SCLSPEED [2:0]			UP	DOWN	RIGHT	LEFT
Initial value	00H	0	0	0	0	0	0	0	0

Bit 0 : LEFT Setting the scroll operation from right to left
"0" : Scroll operation OFF (initial value)
"1" : Scroll operation ON

Bit 1 : RIGHT Setting the scroll operation from left to right
"0" : Scroll operation OFF (initial value)
"1" : Scroll operation ON

*When LEFT operation is valid, RIGHT setting is ignored.

Bit 2 : DOWN Setting the scroll operation from top to bottom
"0" : Scroll operation OFF (initial value)
"1" : Scroll operation ON

Bit 3 : UP Setting the scroll operation from bottom to top
"0" : Scroll operation OFF (initial value)
"1" : Scroll operation ON

*When UP operation is valid, DOWN setting is ignored.

Bit 6-4 : SCLSPEED[2:0] Setting the scroll speed

Bit 7 : SCLSPEEDUP Setting the scroll speed UP

SCLSPEED[2:0]	SCLSPEEDUP=0	SCLSPEEDUP=1
"000"	0.1 s (initial value)	0.0119 s
"001"	0.2 s	0.0238 s
"010"	0.3 s	0.0357 s
"011"	0.4 s	0.0476 s
"100"	0.5 s	0.0595 s
"101"	0.6 s	0.0714 s
"110"	0.7 s	0.0833 s
"111"	0.8 s	0.0952 s

*Setting time is based on OSC frequency, and the above-mentioned shows the value under Typ (1.2MHz).
*Setting time changes on CLKIO terminal input frequency at the external clock operation.

Example) SCLSPEEDUP=0
CLKIO input frequency=1.2MHz→SCLSPEED[2:0] = "000": 0.1[s] (it is the same as the above)
CLKIO input frequency=2.4MHz→SCLSPEED[2:0] = "000": 0.05[s]
CLKIO input frequency= 0.6MHz→SCLSPEED[2:0] = "000": 0.2[s]

* SCLSPEED[2:0] and SCLSPEEDUP should not change value at the time of START (30h, D0) register ="1" setup (under lighting operation).

© 2013 ROHM Co., Ltd. All rights reserved.

Downloaded from Arrow.com.

●**Register Map - continued**

Address 30H < LED Matrix control >

Address (Index)	R/W	Bit7	Bit6	Bit5	Bit4	Bit3	Bit2	Bit1	Bit0
30H	W	-	-	-	-	-	-	-	START
Initial value	00H	0	0	0	0	0	0	0	0

Bit 0：START Lighting/turning off bit of MATRIX LED(LED1-6)
"0"：MATRIX LED（LED1-6） Lights out
"1"：MATRIX LED（LED1-6） Lighting, SLOPE and SCROLL sequence start

Address 31H < Matrix data clear >

Address (Index)	R/W	Bit7	Bit6	Bit5	Bit4	Bit3	Bit2	Bit1	Bit0
31H	W	-	-	-	-	-	-	CLRB	CLRA
Initial value	00H	0	0	0	0	0	0	0	0

Bit 0：CLRA Reset A-pattern register
"0"：A-pattern register is not reset and writable（initial value）
"1"：A-pattern register is reset

Bit 0：CLRB Reset B-pattern register
"0"：B-pattern register is not reset and writable（initial value）
"1"：B-pattern register is reset

*CLRA and CLRB register return to 0 automatically.

Address 7FH < Register map change >

Address (Index)	R/W	Bit7	Bit6	Bit5	Bit4	Bit3	Bit2	Bit1	Bit0
7FH	W	-	-	-	-	-	IAB	OAB	RMCG
Initial value	00H	0	0	0	0	0	0	0	0

Bit 0：RMCG Change register map
"0"：Control register is selected（initial value）
"1"：A-pattern register or B-pattern register is selected

Bit 1：OAB Select register to output for matrix
"0"：A-pattern register is selected（initial value）
"1"：B-pattern register is selected

Bit 2：IAB Select register to write matrix data
"0"：A-pattern register is selected（initial value）
"1"：B-pattern register is selected

© 2013 ROHM Co., Ltd. All rights reserved.

Downloaded from Arrow.com.

●**Register Map - continued**

Address 01H-1EH < A-pattern register data >

Address (Index)	R/W	Bit7	Bit6	Bit5	Bit4	Bit3	Bit2	Bit1	Bit0
01-1EH	W	SCYCAXX [1:0]		SDLYAXX [1:0]		ILEDAXXSET [3:0]			
Initial value	08H	0	0	0	0	1	0	0	0

Bit 3-0 : ILEDAXXSET[3:0] LED output current setting for A-pattern matrix data

"0000" : 0.00mA	"1000" : 10.67mA (initial value)
"0001" : 1.33mA	"1001" : 12.00mA
"0010" : 2.67mA	"1010" : 13.33mA
"0011" : 4.00mA	"1011" : 14.67mA
"0100" : 5.33mA	"1100" : 16.00mA
"0101" : 6.67mA	"1101" : 17.33mA
"0110" : 8.00mA	"1110" : 18.67mA
"0111" : 9.33mA	"1111" : 20.00mA

*ISET=100kΩ

Bit 5-4 : SDLYAXX[1:0] SLOPE delay setting for A-pattern matrix

SDLYAXX[1:0]	SLP[1:0]		
	"00" or "11"	"01"	"10"
"00" (initial value)	No delay	No delay	No delay
"01"	1/4 x(slope cycle time)	1/2 x(slope cycle time)	1/2 x(slope cycle time)
"10"	1/2 x(slope cycle time)	2/2 x(slope cycle time)	2/2 x(slope cycle time)
"11"	3/4 x(slope cycle time)	3/2 x(slope cycle time)	3/2 x(slope cycle time)

Bit 7-6 : SCYCAXX[1:0] SLOPE cycle time setting for A-pattern matrix

SCYCAXX[1:0]	SLP[1:0]		
	"00" or "11"	"01"	"10"
"00" (initial value)	No SLOPE control	No SLOPE control	No SLOPE control
"01"	(slope cycle time)= 1s	(slope cycle time)=0.5s	(slope cycle time)=1s
"10"	(slope cycle time)= 2s	(slope cycle time)=1s	(slope cycle time)=2s
"11"	(slope cycle time)= 3s	(slope cycle time)= 1.5s	(slope cycle time)=3s

* The "XX" shows the matrix number from "00" to "54". Please refer 5x6 LED Matrix coordinate.
*Setting time is based on OSC frequency, and the above-mentioned shows the value under Typ (1.2MHz).
*Setting time changes on CLKIO terminal input frequency at the external clock operation.

Example)

CLKIO input frequency=1.2MHz→"01": Slope cycle =1[s] (it is the same as the above)
CLKIO input frequency=2.4MHz→"01": Slope cycle =0.5[s]
CLKIO input frequency= 0.6MHz→"01": Slope cycle =2[s]

* In a SPI interface, the interval to the following access has regulation after this address access. For details, please refer to the clause of the chapter of serial interface, and the electrical property of a SPI format.

© 2013 ROHM Co., Ltd. All rights reserved.

Downloaded from Arrow.com.

●**Register Map - continued**

Address 01H-1EH < B-pattern register data >

Address (Index)	R/W	Bit7	Bit6	Bit5	Bit4	Bit3	Bit2	Bit1	Bit0
01-1EH	W	SCYCBXX [1:0]		SDLYBXX [1:0]		ILEDBXXSET [3:0]			
Initial value	08H	0	0	0	0	1	0	0	0

Bit 3-0 : ILEDBXXSET[3:0] LED output current setting for B-pattern matrix data

"0000" : 0.00mA	"1000" : 10.67mA (initial value)
"0001" : 1.33mA	"1001" : 12.00mA
"0010" : 2.67mA	"1010" : 13.33mA
"0011" : 4.00mA	"1011" : 14.67mA
"0100" : 5.33mA	"1100" : 16.00mA
"0101" : 6.67mA	"1101" : 17.33mA
"0110" : 8.00mA	"1110" : 18.67mA
"0111" : 9.33mA	"1111" : 20.00mA

*ISET=100kΩ

Bit 5-4 : SDLYBXX[1:0] SLOPE delay setting for B-pattern matrix

SDLYBXX[1:0]	SLP[1:0]		
	"00" or "11"	"01"	"10"
"00" (initial value)	No delay	No delay	No delay
"01"	1/4 x(slope cycle time)	1/2 x(slope cycle time)	1/2 x(slope cycle time)
"10"	1/2 x(slope cycle time)	2/2 x(slope cycle time)	2/2 x(slope cycle time)
"11"	3/4 x(slope cycle time)	3/2 x(slope cycle time)	3/2 x(slope cycle time)

Bit 7-6 : SCYCBXX[1:0] SLOPE cycle time setting for B-pattern matrix

SCYCBXX[1:0]	SLP[1:0]		
	"00" or "11"	"01"	"10"
"00" (initial value)	No SLOPE control	No SLOPE control	No SLOPE control
"01"	(slope cycle time)= 1s	(slope cycle time)=0.5s	(slope cycle time)=1s
"10"	(slope cycle time)= 2s	(slope cycle time)=1s	(slope cycle time)=2s
"11"	(slope cycle time)= 3s	(slope cycle time)= 1.5s	(slope cycle time)=3s

* The "XX" shows the matrix number from "00" to "54". Please refer 5x6 LED Matrix coordinate.
*Setting time is based on OSC frequency, and the above-mentioned shows the value under Typ (1.2MHz).
*Setting time changes on CLKIO terminal input frequency at the external clock operation.

Example)

CLKIO input frequency=1.2MHz→"01": Slope cycle =1[s] (it is the same as the above)
CLKIO input frequency=2.4MHz→"01": Slope cycle =0.5[s]
CLKIO input frequency= 0.6MHz→"01": Slope cycle =2[s]

* In a SPI interface, the interval to the following access has regulation after this address access. For details, please refer to the clause of the chapter of serial interface, and the electrical property of a SPI format.

© 2013 ROHM Co., Ltd. All rights reserved.

Downloaded from Arrow.com.

●Description of operation

1. LED Matrix

1-1. Lighting method of dot Matrix

It can control 5 x 6 Matrix.

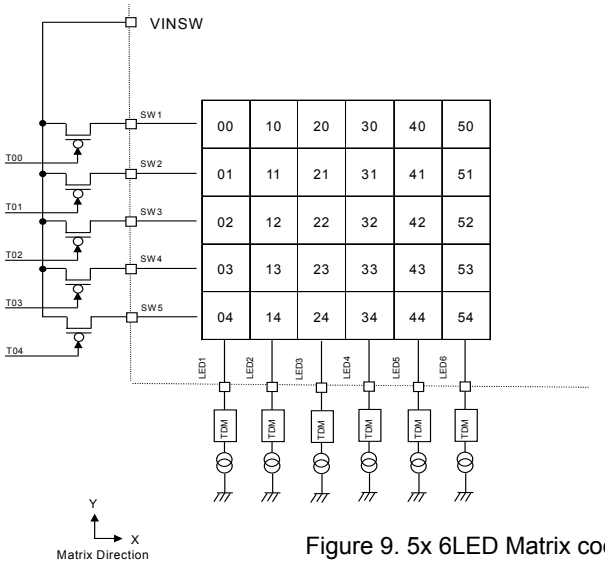

Figure 9. 5x 6LED Matrix coordinate

The SW1 – SW5is turned on by serial. LED is driven one by one within the ON period.

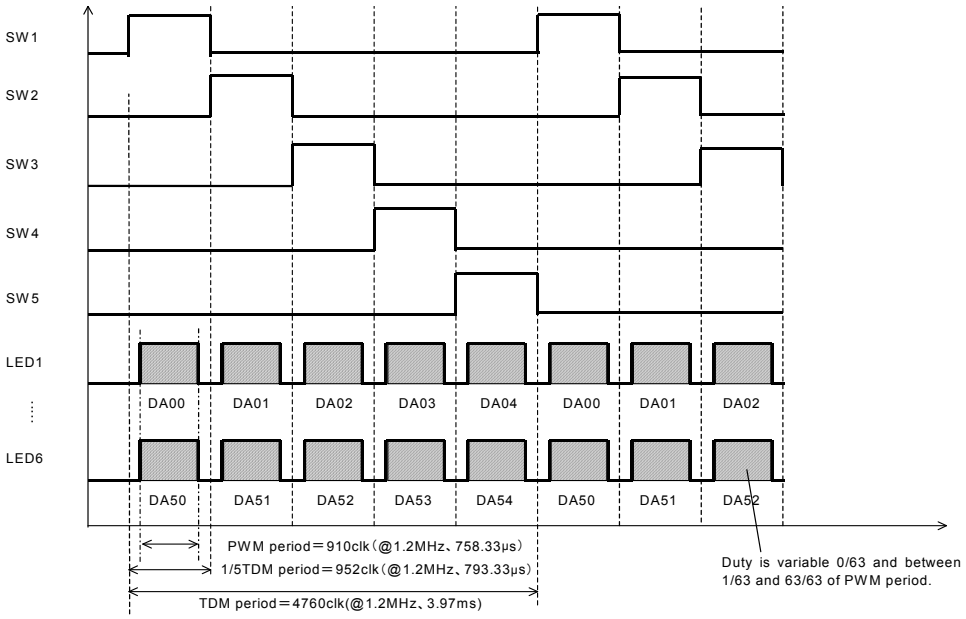

Figure 10. SW timing

© 2013 ROHM Co., Ltd. All rights reserved.

Downloaded from Arrow.com.

●**Description of operation - continued**

1-2. LED lighting example

The firefly lighting example.

The following command set is the example of LED matrix firefly lighting.
It can control the turn on/off time in detail by SLOPE setting registers.

1) 7FH	00000000	Select control register
2) 21H	00000000	Select internal OSC for CLK
3) 01H	00001000	Start OSC
4) 11H	00111111	Set LED1-6 ENABLE
5) 20H	00111111	Set Max Duty at Slope
6) 7FH	00000001	Select A-pattern or B-pattern register, Select A-pattern register to write matrix data
7) 01-1EH	xxxxxxxx	Write A-pattern data
8) 7FH	00000000	Select control register, Select A-pattern register to output for matrix
9) 2DH	00000010	Set SLOPE control ENABLE
10) 30H	00000001	Start SLOPE sequence
11) 30H		00000000 Lights out

2. LED Driver Current, SLOPE and SCROLL Sequence Control

2-1. LED driver current control

It can be controlled PWM Duty and DC current for LED driver current.

	Item	Control object	Control detail	Setting Registers	
				Name *	Bits
(A)	PWM Duty	Whole matrix	0/63 to 63/63 (64 step)	PWMSET	6
(B)	DC current	Each matrix dot	0 to 20mA (16 step) **	ILEDAXXSET ILEDBXXSET	4

* The “XX” shows the matrix number from “00” to “54”. Please refer 5x6 LED Matrix coordinate.
** ISET=100kΩ

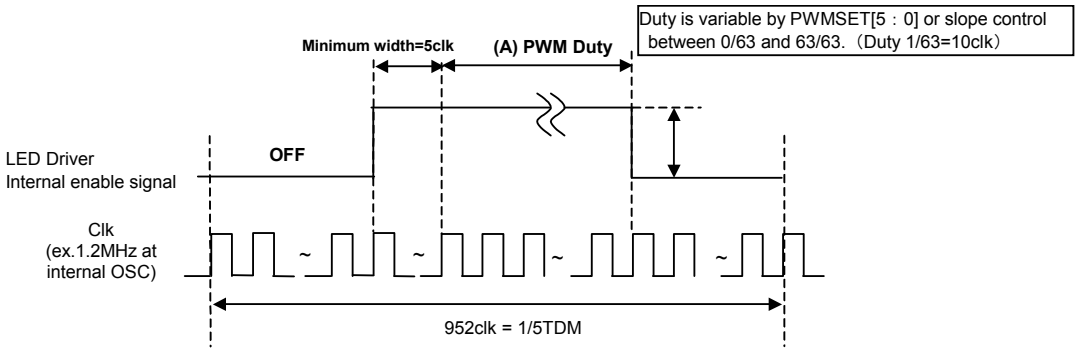

Figure 11. LED output current timing and PWM cycle

© 2013 ROHM Co., Ltd. All rights reserved.

Downloaded from Arrow.com.

●**Description of operation - continued**

910clk of PWM period is set in the 1/5 TDM period (952clk).
PWM is operated 63 steps of 14clk. TDM period is 3.97ms (@1.2MHz).
Moreover, it has the starting waiting time of a constant current driver by 35clk(s).
PWM"H" time turns into ON time after waiting 35 clk.
(However, LED driver is set “OFF” compulsorily at PWM=0% setting.)

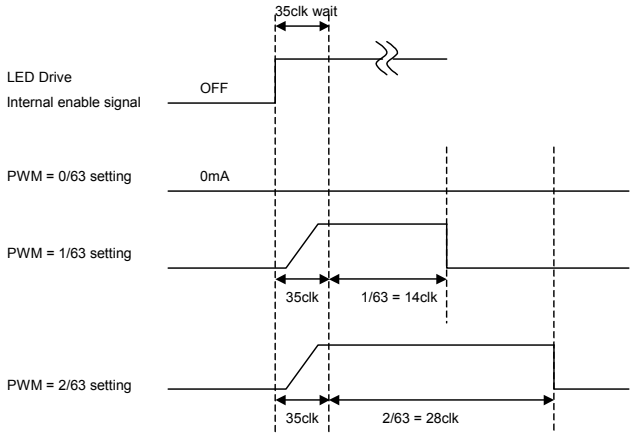

Figure 12. LED output current timing and a PWM cycle

2-2. SLOPE control

It can be controlled Delay and SLOPE cycle time for LED driver current.

	Item	Control object	Control detail	Setting Registers	
				Name *	Bits
(A)	Delay	Each matrix dot	0 to 3/4 x slope cycle time (4 step)	SDLYAXX SDLYBXX	2
(B)	SLOPE cycle time	Each matrix dot	0 to 3[s] (4 step)	SCYCAXX SCYCBXX	2
	SLOPE time	Whole matrix	0,1/4,2/4 x slope cycle time	SLP	2

* The “XX” shows the matrix number from “00” to “54”. Please refer 5x6 LED Matrix coordinate.

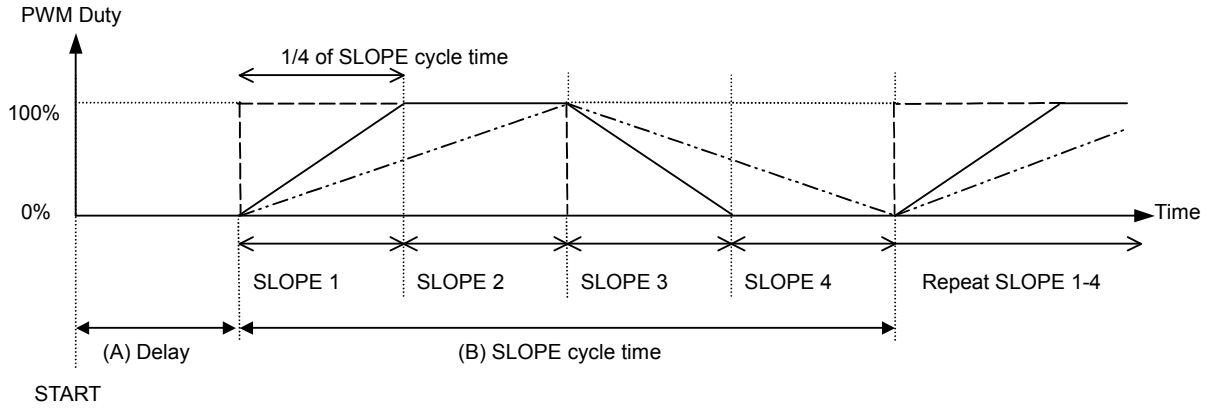

Figure 13. SLOPE operation

When SLPEN=”1” and PWMEN=SCLEN=”0”, SLOPE operation starts (like upper figure).
After “Delay” time start SLOPE by SLP register.

© 2013 ROHM Co., Ltd. All rights reserved.

Downloaded from Arrow.com.

●**Description of operation - continued**

2-3. SCROLL control

2-3-1 Normal operation

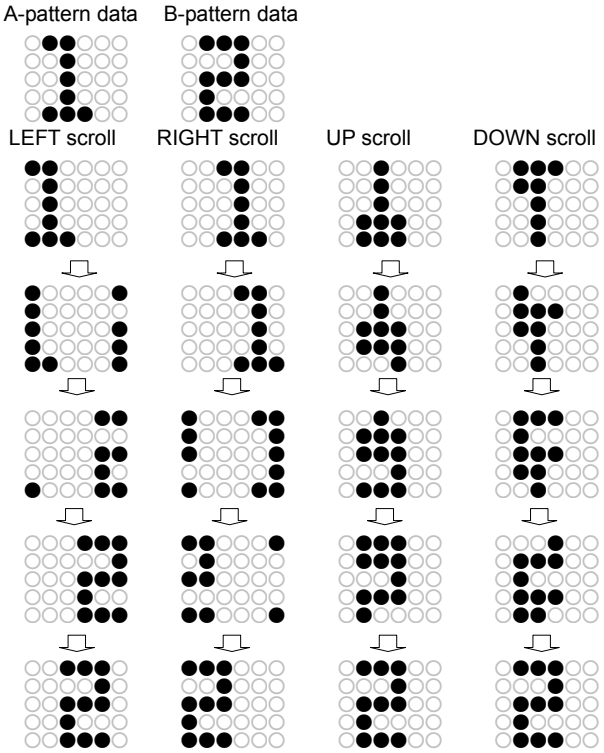

2-4. Relation of PWM, SLOPE and SCROLL control

Register of condition and ENABLE

	PWM	SLOPE	SCROLL
Condition	PWMSET [5:0]	SCYCXXX [1:0] SDLYXXX [1:0]	SCLSPEED [2:0] UP/DOWN/RIGHT/LEFT
ENABLE	PWMEN	SLPEN	SCLEN

Combination of command

Operation	PWMEN	SLPEN	SCLEN
1	OFF	OFF	OFF
2	ON	OFF	OFF
3	OFF	ON	OFF
4	ON	ON	OFF
5	OFF	OFF	ON
Do not use this combination	ON	OFF	ON
	OFF	ON	ON
	ON	ON	ON

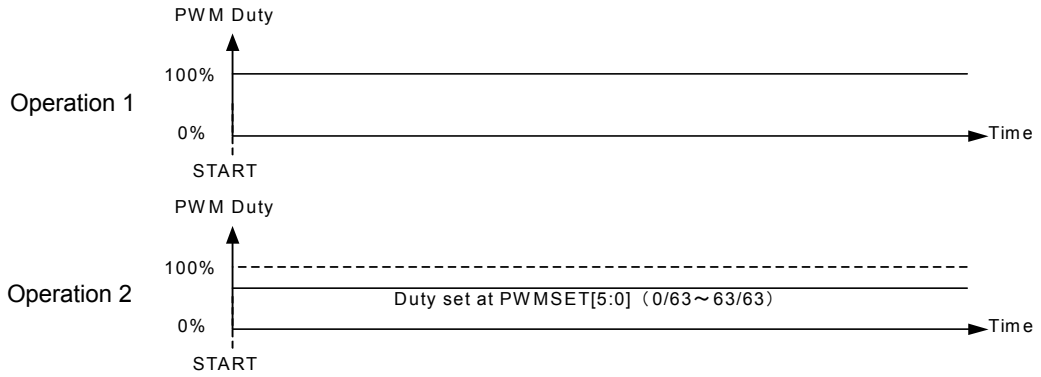

© 2013 ROHM Co., Ltd. All rights reserved.

Downloaded from Arrow.com.

●**Description of operation - continued**

Operation 3

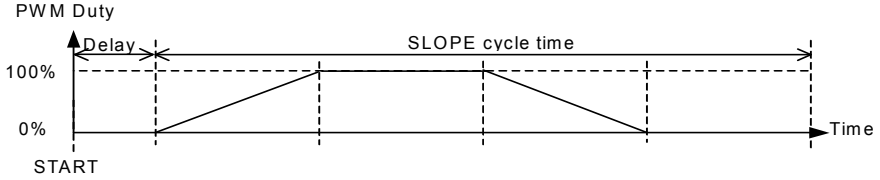

Operation 4

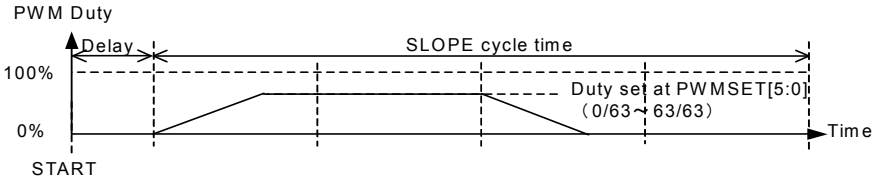

Operation 5

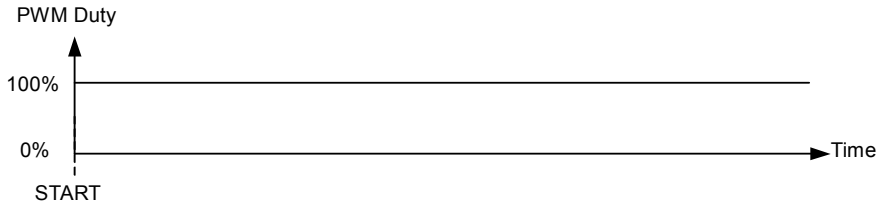

2-5. SLOPE control

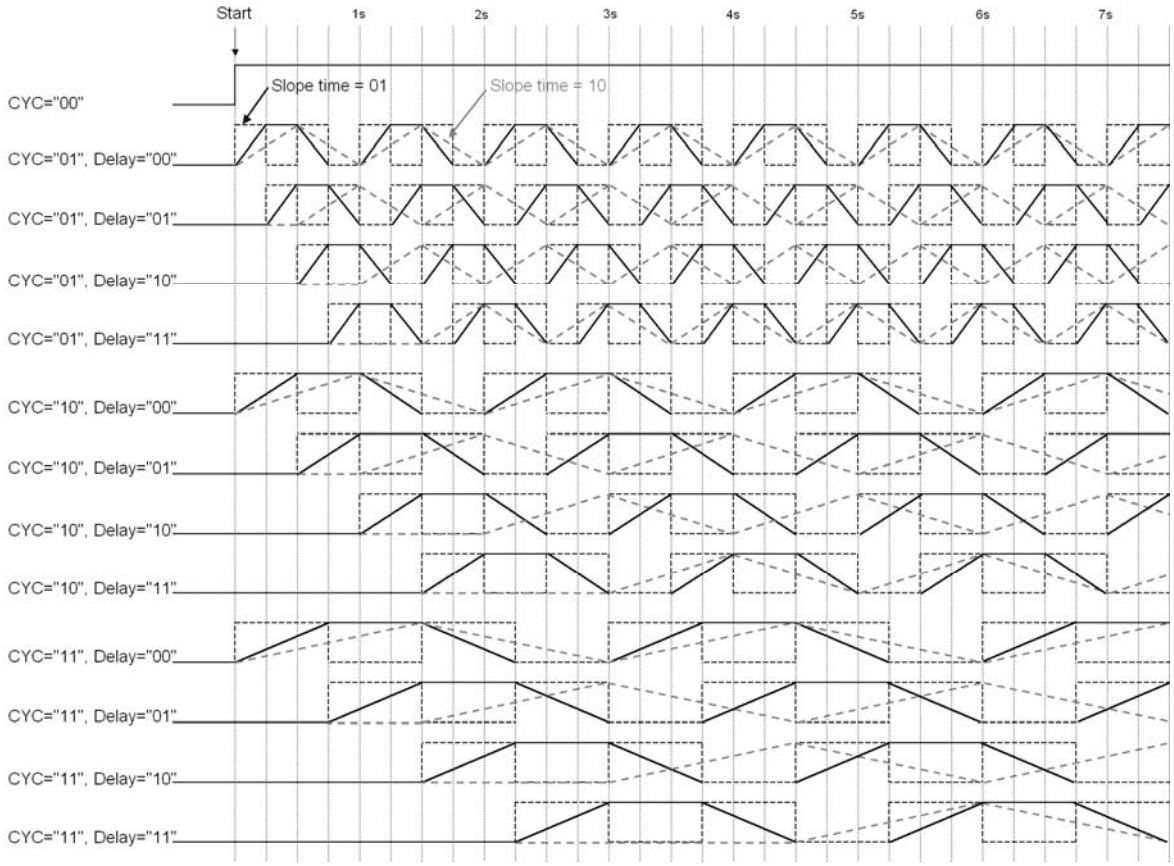

Pattern can be set each dot.
Slope Time is common setting for whole matrix.
Orthodox auto pattern can be make by combine pattern.

© 2013 ROHM Co., Ltd. All rights reserved.

Downloaded from Arrow.com.

●**Description of operation - continued**

3. About LED Max current setting

LED Current is variable by RISET resister connecting ISET terminal. Maximum LED current can be leads by next formula.

ILEDmax [A] = 2.0 / RISET [kΩ] (Typ)

Caution that Maximum LED current value is up to 42.5mA.

<ISET terminal resister value vs LED Current (calculation)>

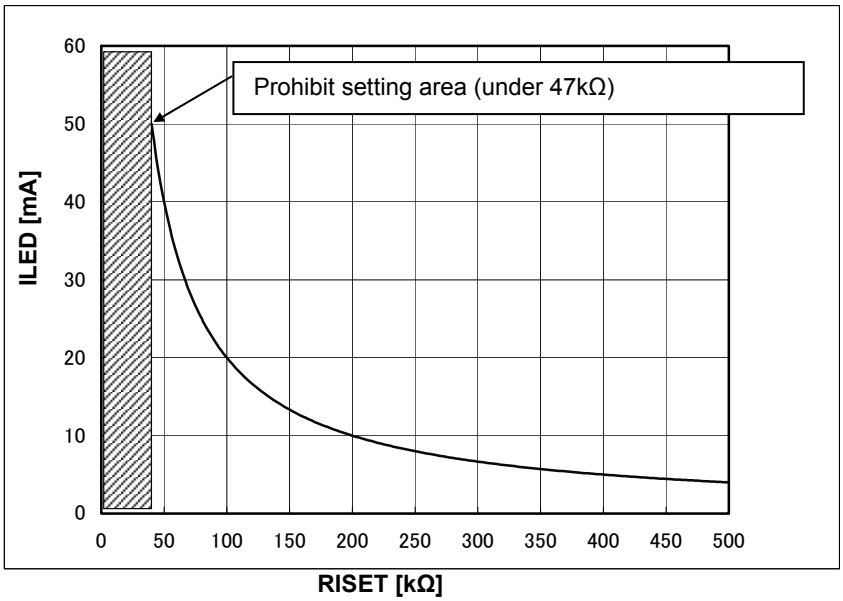

Figure 14. ILED vs RISET

In case of RISET = 100[kΩ], Maximum LED current is 20.0mA.
There are Maximum LED current and Delta LED current value in next table. If you change the RISET value, you can calculate LED current on each step by next table.

Recommended RISET value is 100[kΩ].
In case of RISET under 47 [kΩ], ISET short function may be effective.

An example for setting DC current=16mA , PWMDuty=50.8%

1. ILEDMax current settting (set by external resistor):
   RISET=100kΩ -> ILEDmax[A]= 2.0 / RISET [kΩ]=20mA.

2. DC current setting (set by register/Each matrix dot can be set):
   ILEDxxSET[3:0]="1100" -> ILEDxx[A]=12/15*ILEDmax=16mA.
   Please refer to P16 to set register of address01H-40H.

3. PWM duty setting (set by register /whole matrix):
   PWMSET[5:0]="100000" (50.8%) -> ILEDxx[A]=16mA ∗ 50.8%=8.128mA.
   Please refer to P14 to set register of address20H.

4. 1/8TDM active -> ILEDxx[A]=8.128mA ∗ 1/8=1.016mA.

   For this case, average 1.016mA LED current is loaded to one LED.

© 2013 ROHM Co., Ltd. All rights reserved.

Downloaded from Arrow.com.

●**Description of operation - continued**

3. Power up sequence

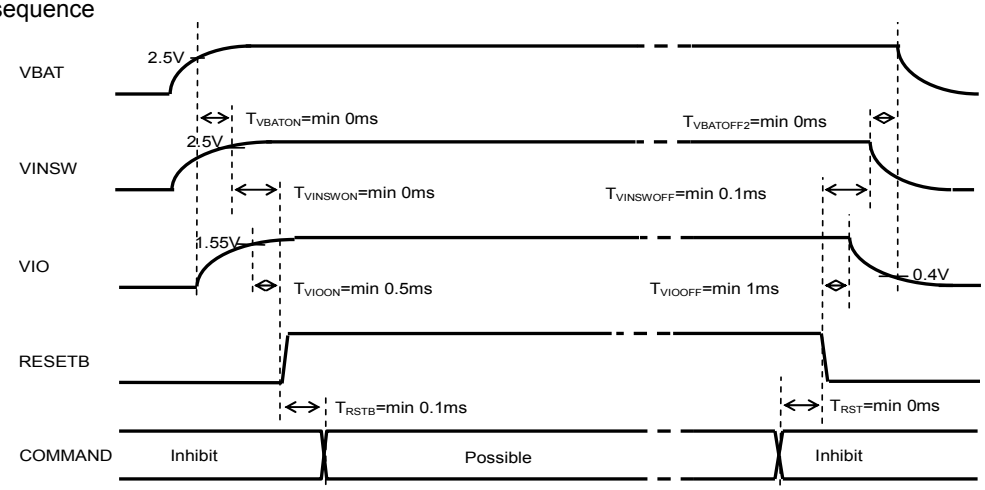

Figure 15. Power up sequence

Please take sufficient wait time for each Power/Control signal.
However, if VBAT<2.1V(typ) or On TSD, the command input is not effective because of the protection operation
Please raise VIO voltage after VBAT voltage rise more 2.5V, and drop VBAT voltage before VIO voltage fall less 0.4V

4. Reset

There are two kinds of reset, software reset and hardware reset

(1) Software reset
- All the registers are initialized by SFTRST="1".
- SFTRST is an automatically returned to "0". (Auto Return 0).

(2) Hardware reset
- It shifts to hardware reset by changing RESETB pin “H” → “L”.
- The condition of all the registers under hardware reset pin is returned to the Initial Value, and it stops accepting all address.
  All LED driver turn off.
- It’s possible to release from a state of hardware reset by changing RESETB pin “L” → “H”.
  RESETB pin has delay circuit. It doesn’t recognize as hardware reset in "L" period under 5μs.

5. Thermal shutdown

A thermal shutdown function is effective at all blocks of those other than VREF.
Return to the state before detection automatically at the time of release.

6. UVLO Function (VBAT Voltage Low-Voltage Detection)

UVLO function is effective at all blocks of those other than VREF, and when detected, those blocks function is stopped.
Return to the state before detection automatically at the time of release.

7. I/O

When the RESETB pin is Low, the input buffers (SDA and SCL) are disabling for the Low consumption power.

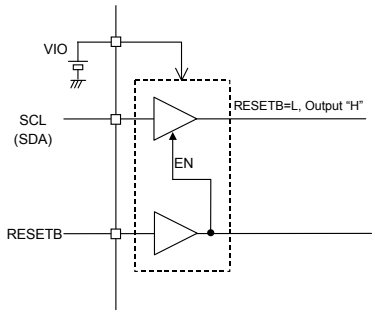

Figure 16. Input disabling by RESETB

© 2013 ROHM Co., Ltd. All rights reserved.

Downloaded from Arrow.com.

●**Description of operation - continued**

8. Standard Clock Input and Output

It is possible to carry out synchronous operation of two or more ICs using the input-and-output function of a standard clock.

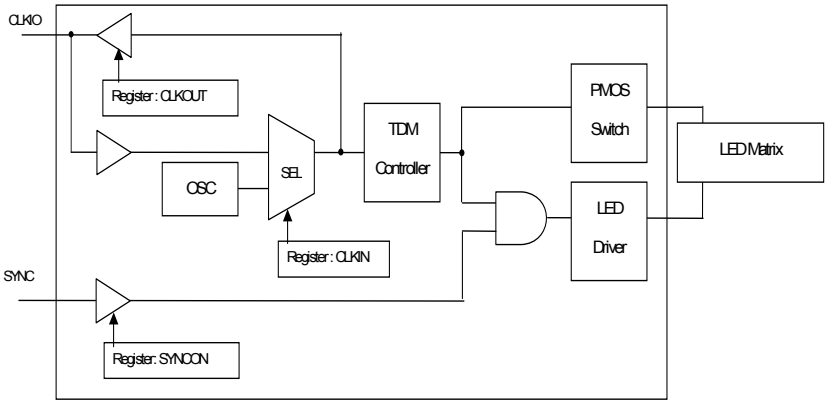

Figure 17. I/O part equivalent circuit diagram

・When a clock is supplied from the exterior

Inputting an external standard clock from CLKIO and setting register CLKIN=1,IC operates with the clock inputted from CLKIO as a standard clock.

・When the built-in oscillation circuit of one IC is used

When a clock cannot be supplied from the exterior, it is possible to synchronize between ICs by the connection as the following figure.

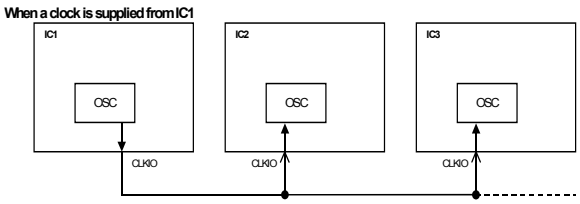

Figure 18. It is an example of application for the usage of two or more.

9. External ON/OFF Synchronization (SYNC Terminal)

Lighting of LED that synchronized with the external signal is possible.

By setting H/L of SYNC terminal, LED drivers output is set ON/OFF.

It's asynchronous operation with the internal TDM control.

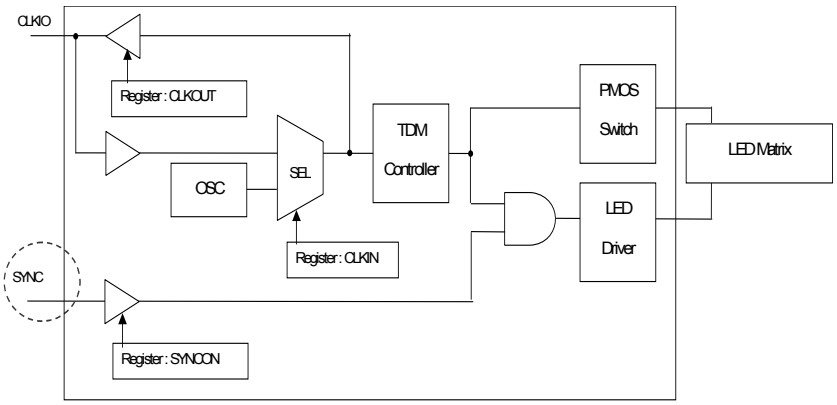

Figure 19. I/O part equivalent circuit diagram

© 2013 ROHM Co., Ltd. All rights reserved.

Downloaded from Arrow.com.

●**Description of operation - continued**

10. About terminal processing of the function which is not used

Please set up a test terminal and the unused terminal as the following table.

Especially, if an input terminal is not fixed, it may occur the unstable state of a device and the unexpected internal current.

Terminal name	Processing	Reason
SYNC	GND Short	The input terminal
CLKIO	Open	Initial values is the input terminal
TEST1	GND Short	The input terminal for a test
TESTO	Open	The output terminal for a test
LED Terminal	GND Short	In order to avoid an unfixed state. (A register setup in connection with LED terminal that is not used is forbidden.)
SW Terminal	VINSW Short	In order to avoid an unfixed state. (A register setup in connection with SW terminal that is not used is forbidden.)

© 2013 ROHM Co., Ltd. All rights reserved.

Downloaded from Arrow.com.

●**Description of operation - continued**

12. Setting about VINSW

VINSW is Power Supply about LED Current. It needs proper Voltage range of LED terminal to get proper LED Current (refer to Page2). If it needs the voltage range, it needs to set up proper Voltage range of VINSW which is Power Supply about LED.

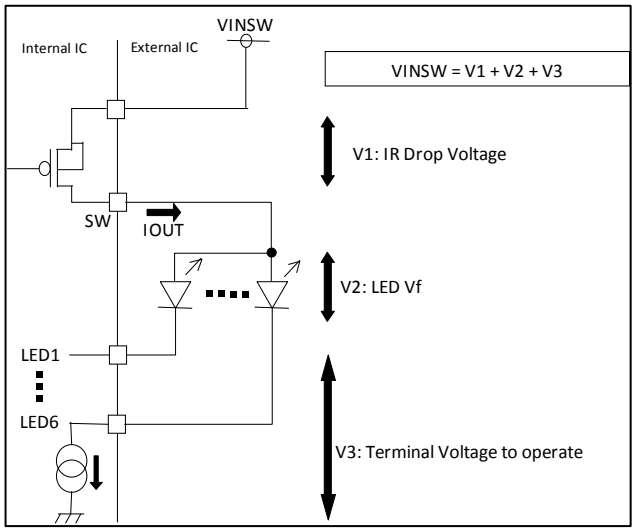

Figure 20. Set up VINSW

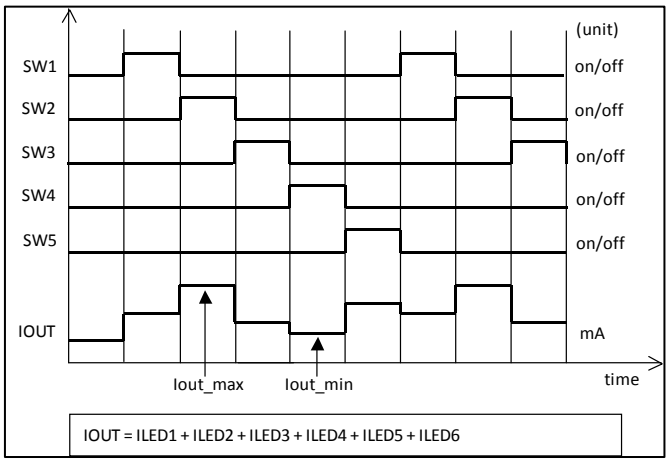

Figure 21. SW timing and IOUT

VINSW's Voltage range is made by V1, V2, V3. (refer to Figure 19)

VINSW_max = V1_min + V2_min + V3_max

VINSW_min = V1_max + V2_max + V3_min

V1:IR Drop Voltage

V1 is IR Voltage drop by SW's Resistor at ON and IOUT which is the sum of every LED Current. It is V1's maximum and minimum that it multiplies by SW's Resistor at ON and IOUT maximum and minimum in each SW timing. Please estimate IOUT by setting application. (refer to figure 20). Please refer to page 2 about SW's Resistor at ON. (And it needs to estimate parasitic resistor on PCB's current route).

V1_max = Ron * Iout_max

V1_min = Ron * Iout_min

V2: LED Vf

V2 is the Voltage drop by LED's Vf. Please confirm about all LED's Vf.

V2_max = Vf_max

V2_min = Vf_min

V3: Terminal Voltage to operate

V3 is the terminal Voltage to operate LED Current. (refer to page 2). The minimum is made by IC's ability. The maximum is made by VBAT's minimum in Voltage range.

V3_max = VBAT_min – 1.4V

V3_min = 0.2V

--Example of Setting VINSW—

Condition: VBAT=3.2 – 4.0 V, Iout_max = 100mA, Iout_min = 20mA, Vf_max = 3.0V, Vf_min = 2.5V

V1_max = 1 Ω * 100mA = 0.1V V1_min = 1 Ω * 20mA = 0.02V

V2_max = 3.0V V2_min = 2.5V

V3_max = 3.2V – 1.4V = 1.8V V3_min = 0.2V

VINSW_max = 0.02V + 2.5V + 1.8V = 4.32V

VINSW_min = 0.1V + 3.0V + 0.2V =3.3V

This is proper Voltage range about VINSW.

© 2013 ROHM Co., Ltd. All rights reserved.

Downloaded from Arrow.com.

●PCB pattern of the Power dissipation measuring board

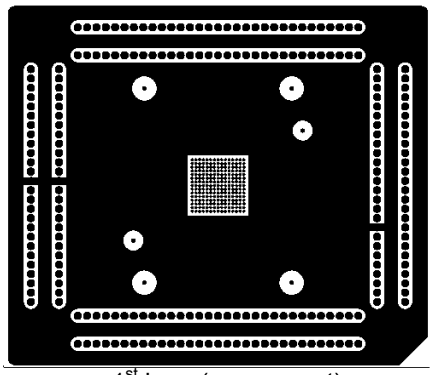

1st layer(component)

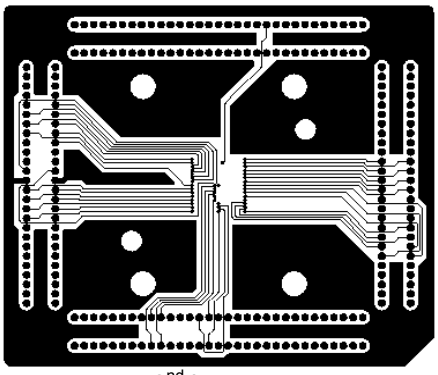

2nd layer

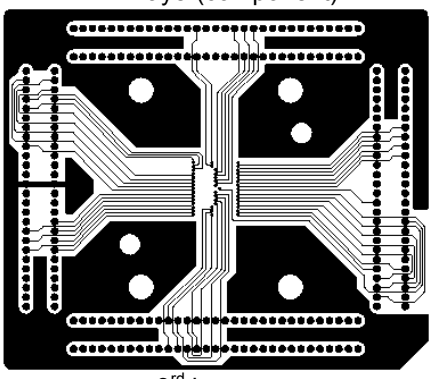

3rd layer

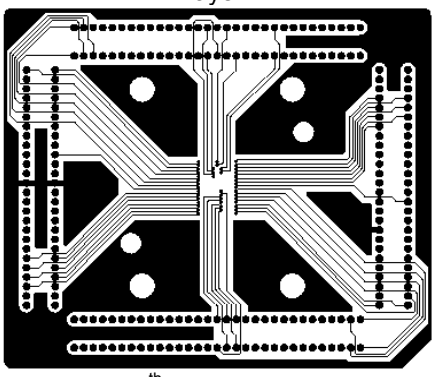

4th layer

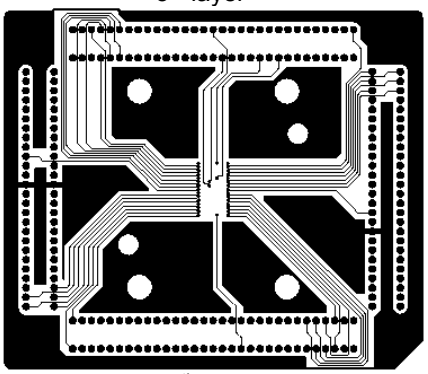

5th layer

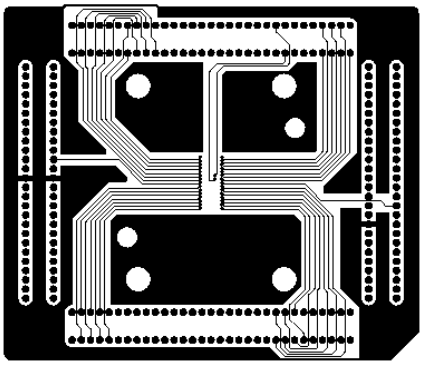

6th layer

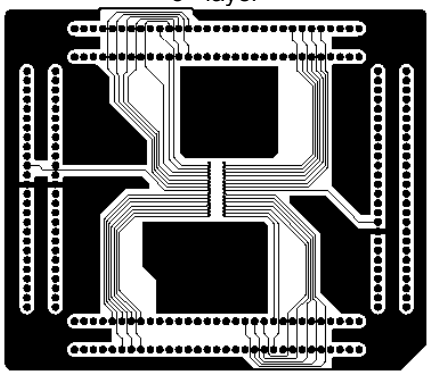

7th layer

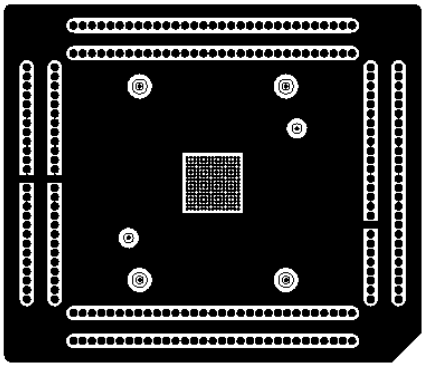

8th layer(solder)

© 2013 ROHM Co., Ltd. All rights reserved.

Downloaded from Arrow.com.

●Power dissipation (On the ROHM's standard board)

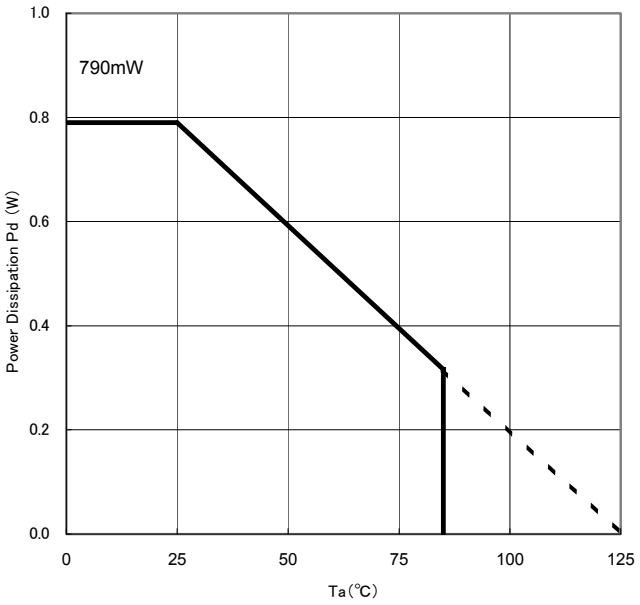

Figure 22. Power dissipation

Information of the ROHM's standard board
Material : glass-epoxy
Size : 50mm × 58mm × 1.75mm (8th layer)
Wiring pattern figure Refer to after page.

●Block Diagram / Application Circuit example 1

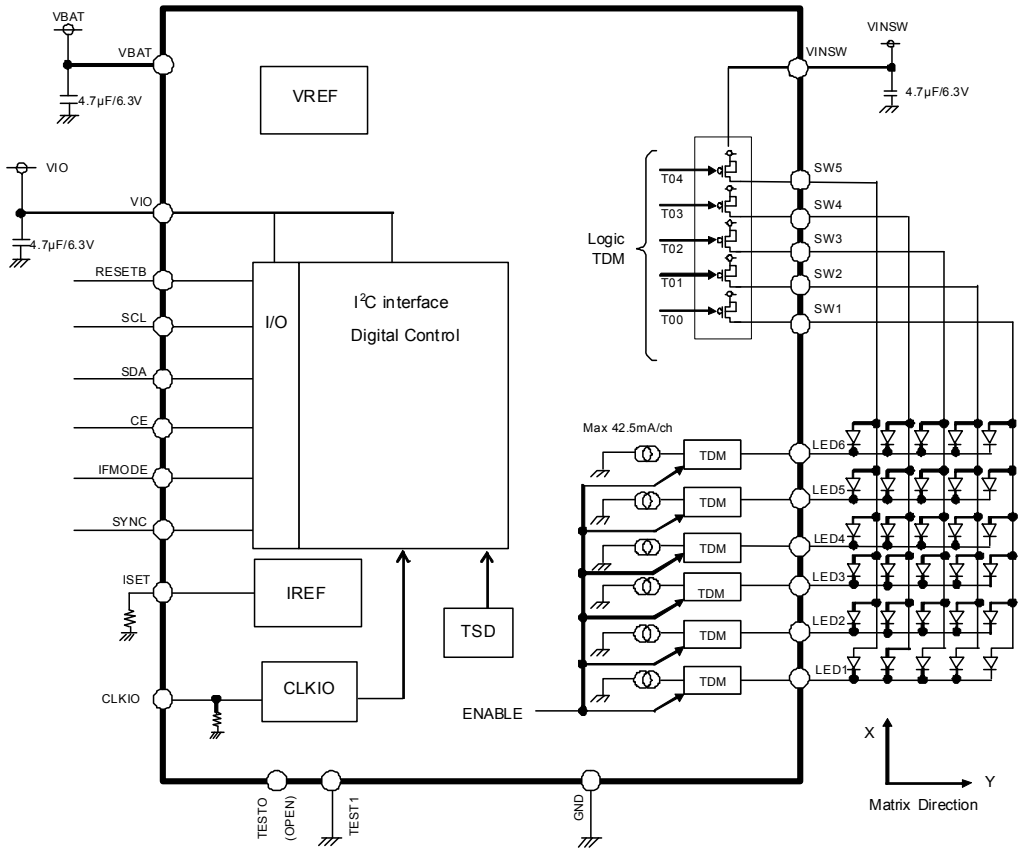

Figure 23. Block Diagram / Application Circuit example 1

© 2013 ROHM Co., Ltd. All rights reserved.

Downloaded from Arrow.com.

●Block Diagram / Application Circuit example 2

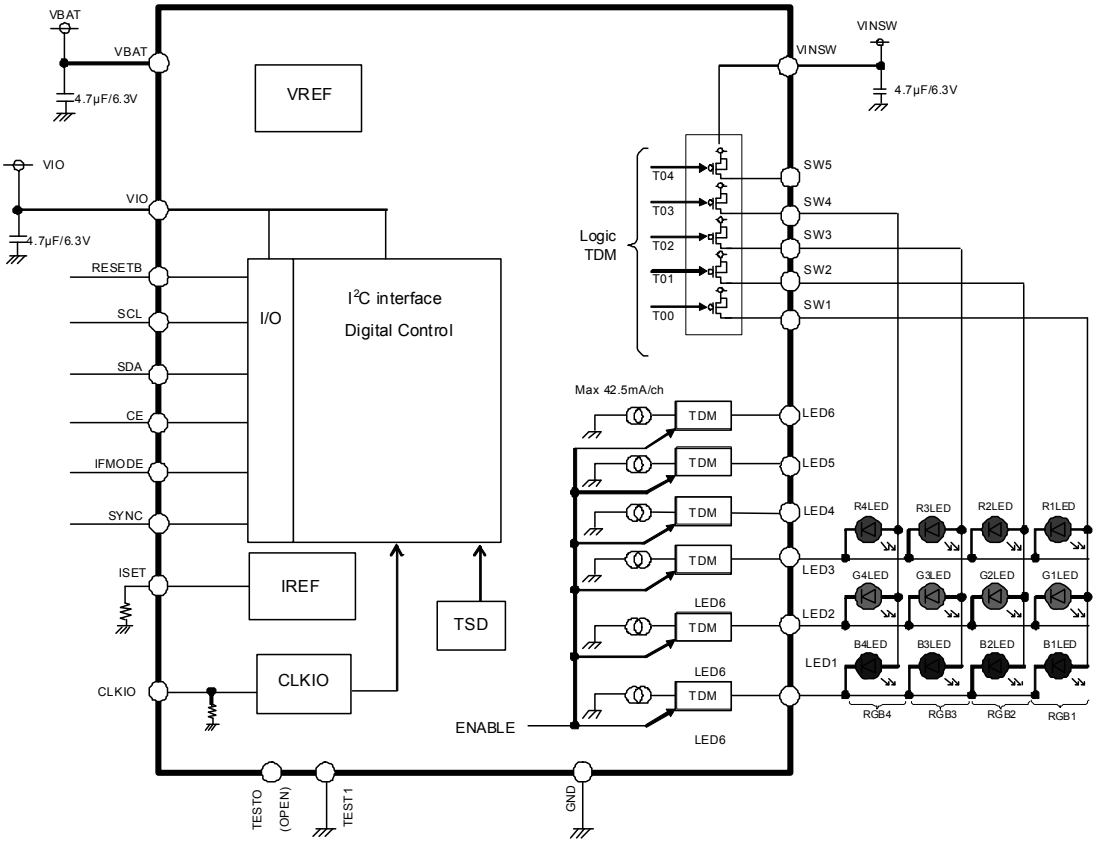

Figure 24. Block Diagram / Application Circuit example 2

●Block Diagram / Application Circuit example 3

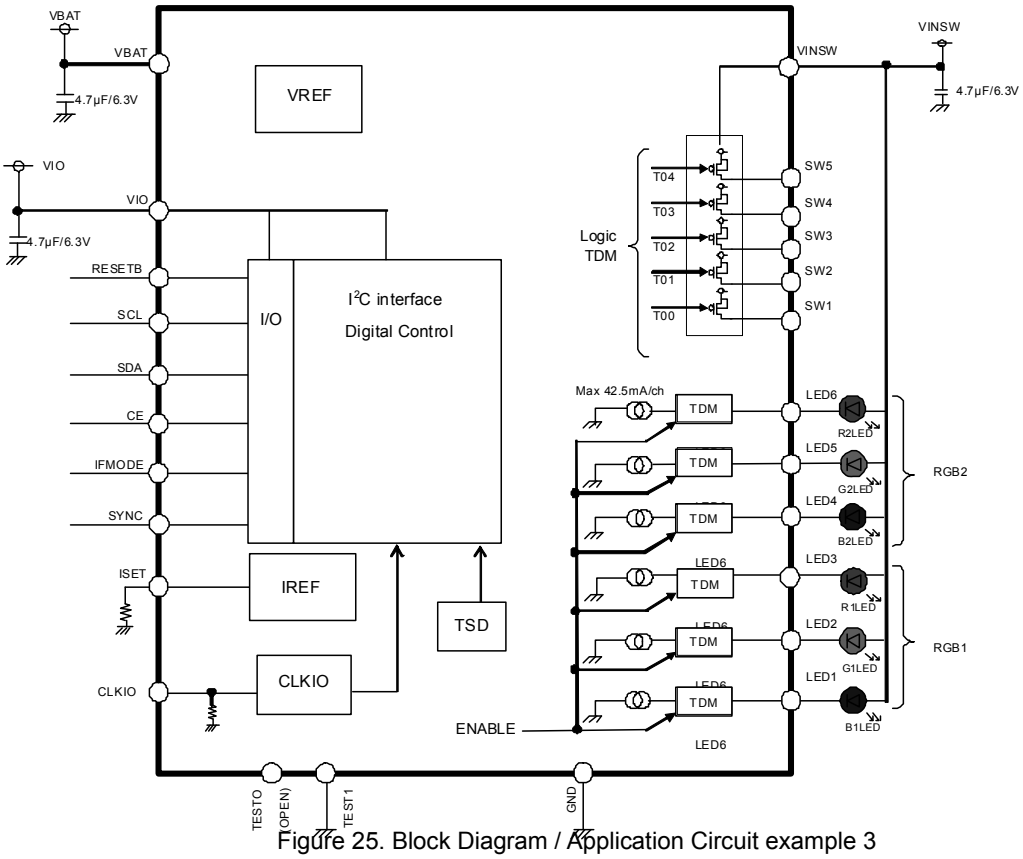

Figure 25. Block Diagram / Application Circuit example 3

© 2013 ROHM Co., Ltd. All rights reserved.

Downloaded from Arrow.com.

●Operational Notes

(1) Absolute Maximum Ratings
An excess in the absolute maximum ratings, such as supply voltage, temperature range of operating conditions, etc., can break down devices, thus making impossible to identify breaking mode such as a short circuit or an open circuit. If any special mode exceeding the absolute maximum ratings is assumed, consideration should be given to take physical safety measures including the use of fuses, etc.

(2) Power supply and ground line
Design PCB pattern to provide low impedance for the wiring between the power supply and the ground lines. Pay attention to the interference by common impedance of layout pattern when there are plural power supplies and ground lines. Especially, when there are ground pattern for small signal and ground pattern for large current included the external circuits, please separate each ground pattern. Furthermore, for all power supply pins to ICs, mount a capacitor between the power supply and the ground pin. At the same time, in order to use a capacitor, thoroughly check to be sure the characteristics of the capacitor to be used present no problem including the occurrence of capacity dropout at a low temperature, thus determining the constant.

(3) Ground voltage
Make setting of the potential of the ground pin so that it will be maintained at the minimum in any operating state. Furthermore, check to be sure no pins are at a potential lower than the ground voltage including an actual electric transient.

(4) Short circuit between pins and erroneous mounting
In order to mount ICs on a set PCB, pay thorough attention to the direction and offset of the ICs. Erroneous mounting can break down the ICs. Furthermore, if a short circuit occurs due to foreign matters entering between pins or between the pin and the power supply or the ground pin, the ICs can break down.

(5) Operation in strong electromagnetic field
Be noted that using ICs in the strong electromagnetic field can malfunction them.

(6) Input pins
In terms of the construction of IC, parasitic elements are inevitably formed in relation to potential. The operation of the parasitic element can cause interference with circuit operation, thus resulting in a malfunction and then breakdown of the input pin. Therefore, pay thorough attention not to handle the input pins, such as to apply to the input pins a voltage lower than the ground respectively, so that any parasitic element will operate. Furthermore, do not apply a voltage to the input pins when no power supply voltage is applied to the IC. In addition, even if the power supply voltage is applied, apply to the input pins a voltage lower than the power supply voltage or within the guaranteed value of electrical characteristics.

(7) External capacitor
In order to use a ceramic capacitor as the external capacitor, determine the constant with consideration given to a degradation in the nominal capacitance due to DC bias and changes in the capacitance due to temperature, etc.

(8) Thermal shutdown circuit (TSD)
This LSI builds in a thermal shutdown (TSD) circuit. When junction temperatures become detection temperature or higher, the thermal shutdown circuit operates and turns a switch OFF. The thermal shutdown circuit, which is aimed at isolating the LSI from thermal runaway as much as possible, is not aimed at the protection or guarantee of the LSI. Therefore, do not continuously use the LSI with this circuit operating or use the LSI assuming its operation.

(9) Thermal design
Perform thermal design in which there are adequate margins by taking into account the permissible dissipation (Pd) in actual states of use.

(10) About the pin for the test, the un-use pin
Prevent a problem from being in the pin for the test and the un-use pin under the state of actual use. Please refer to Datasheet. And, as for the pin that doesn't specially have an explanation, ask our company person in charge.

(11) About the rush current
For ICs with more than one power supply, it is possible that rush current may flow instantaneously due to the internal powering sequence and delays. Therefore, give special consideration to power coupling capacitance, power wiring, width of ground wiring, and routing of wiring.

(12) SW1-5 don’t have short protection. When need protection, please use fuse element.

© 2013 ROHM Co., Ltd. All rights reserved.

Downloaded from Arrow.com.

●Ordering Information

B U 2 6 5 0 7 G U L	-	E 2
Part Number	Package GUL: VCSP50L2	Packaging and forming specification E2: Embossed tape and reel

●Marking Diagram

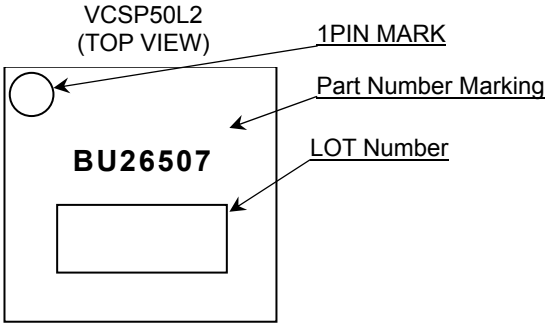

© 2013 ROHM Co., Ltd. All rights reserved.

Downloaded from Arrow.com.

●**Package**

25Pin VCSP50L2 CSP small package
SIZE : 2.5mm x 2.5mm
A ball pitch : 0.5mm
Height : 0.55mm max

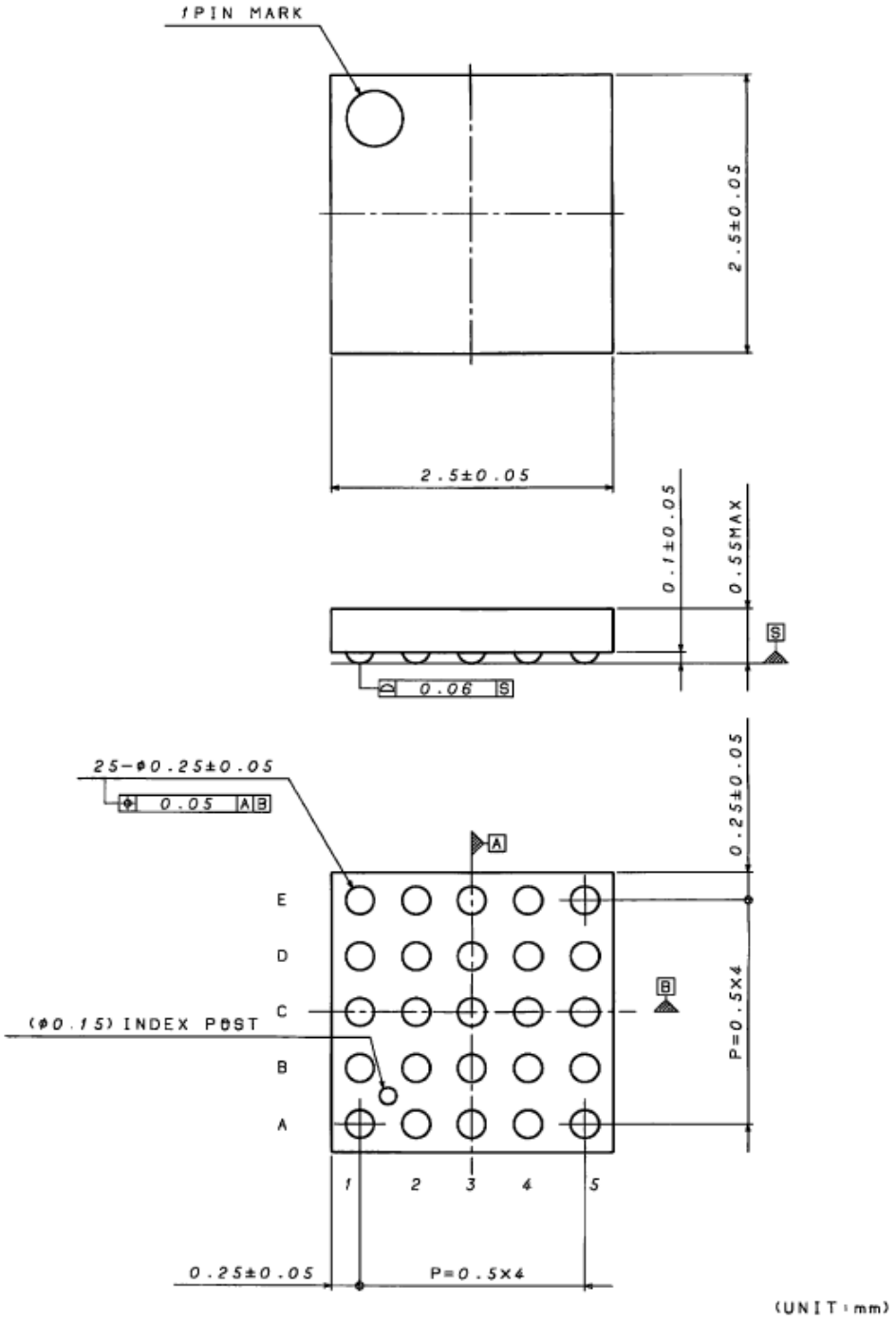

© 2013 ROHM Co., Ltd. All rights reserved.

Downloaded from Arrow.com.

●Revision History

Date	Revision	Changes
22.Jan.2013	001	New Release

© 2013 ROHM Co., Ltd. All rights reserved.

Downloaded from Arrow.com.

Notice

Precaution on using ROHM Products

1. Our Products are designed and manufactured for application in ordinary electronic equipment (such as AV equipment, OA equipment, telecommunication equipment, home electronic appliances, amusement equipment, etc.). If you intend to use our Products in devices requiring extremely high reliability (such as medical equipment (Note 1), transport equipment, traffic equipment, aircraft/spacecraft, nuclear power controllers, fuel controllers, car equipment including car accessories, safety devices, etc.) and whose malfunction or failure may cause loss of human life, bodily injury or serious damage to property ("Specific Applications"), please consult with the ROHM sales representative in advance. Unless otherwise agreed in writing by ROHM in advance, ROHM shall not be in any way responsible or liable for any damages, expenses or losses incurred by you or third parties arising from the use of any ROHM's Products for Specific Applications.

(Note1) Medical Equipment Classification of the Specific Applications

JAPAN	USA	EU	CHINA
CLASSⅢ	CLASSⅢ	CLASSⅡb	CLASSⅢ
CLASSⅣ		CLASSⅢ	

2. ROHM designs and manufactures its Products subject to strict quality control system. However, semiconductor products can fail or malfunction at a certain rate. Please be sure to implement, at your own responsibilities, adequate safety measures including but not limited to fail-safe design against the physical injury, damage to any property, which a failure or malfunction of our Products may cause. The following are examples of safety measures:
   [a] Installation of protection circuits or other protective devices to improve system safety
   [b] Installation of redundant circuits to reduce the impact of single or multiple circuit failure

3. Our Products are designed and manufactured for use under standard conditions and not under any special or extraordinary environments or conditions, as exemplified below. Accordingly, ROHM shall not be in any way responsible or liable for any damages, expenses or losses arising from the use of any ROHM's Products under any special or extraordinary environments or conditions. If you intend to use our Products under any special or extraordinary environments or conditions (as exemplified below), your independent verification and confirmation of product performance, reliability, etc, prior to use, must be necessary:
   [a] Use of our Products in any types of liquid, including water, oils, chemicals, and organic solvents
   [b] Use of our Products outdoors or in places where the Products are exposed to direct sunlight or dust
   [c] Use of our Products in places where the Products are exposed to sea wind or corrosive gases, including Cl_2, H_2S, NH_3, SO_2, and NO_2
   [d] Use of our Products in places where the Products are exposed to static electricity or electromagnetic waves
   [e] Use of our Products in proximity to heat-producing components, plastic cords, or other flammable items
   [f] Sealing or coating our Products with resin or other coating materials
   [g] Use of our Products without cleaning residue of flux (Exclude cases where no-clean type fluxes is used. However, recommend sufficiently about the residue.) ; or Washing our Products by using water or water-soluble cleaning agents for cleaning residue after soldering
   [h] Use of the Products in places subject to dew condensation

4. The Products are not subject to radiation-proof design.

5. Please verify and confirm characteristics of the final or mounted products in using the Products.

6. In particular, if a transient load (a large amount of load applied in a short period of time, such as pulse. is applied, confirmation of performance characteristics after on-board mounting is strongly recommended. Avoid applying power exceeding normal rated power; exceeding the power rating under steady-state loading condition may negatively affect product performance and reliability.

7. De-rate Power Dissipation depending on ambient temperature. When used in sealed area, confirm that it is the use in the range that does not exceed the maximum junction temperature.

8. Confirm that operation temperature is within the specified range described in the product specification.

9. ROHM shall not be in any way responsible or liable for failure induced under deviant condition from what is defined in this document.

Precaution for Mounting / Circuit board design

1. When a highly active halogenous (chlorine, bromine, etc.) flux is used, the residue of flux may negatively affect product performance and reliability.

2. In principle, the reflow soldering method must be used on a surface-mount products, the flow soldering method must be used on a through hole mount products. If the flow soldering method is preferred on a surface-mount products, please consult with the ROHM representative in advance.

For details, please refer to ROHM Mounting specification

© 2015 ROHM Co., Ltd. All rights reserved.

Downloaded from Arrow.com.

Precautions Regarding Application Examples and External Circuits

1. If change is made to the constant of an external circuit, please allow a sufficient margin considering variations of the characteristics of the Products and external components, including transient characteristics, as well as static characteristics.

2. You agree that application notes, reference designs, and associated data and information contained in this document are presented only as guidance for Products use. Therefore, in case you use such information, you are solely responsible for it and you must exercise your own independent verification and judgment in the use of such information contained in this document. ROHM shall not be in any way responsible or liable for any damages, expenses or losses incurred by you or third parties arising from the use of such information.

Precaution for Electrostatic

This Product is electrostatic sensitive product, which may be damaged due to electrostatic discharge. Please take proper caution in your manufacturing process and storage so that voltage exceeding the Products maximum rating will not be applied to Products. Please take special care under dry condition (e.g. Grounding of human body / equipment / solder iron, isolation from charged objects, setting of Ionizer, friction prevention and temperature / humidity control).

Precaution for Storage / Transportation

1. Product performance and soldered connections may deteriorate if the Products are stored in the places where:
   [a] the Products are exposed to sea winds or corrosive gases, including Cl_2, H_2S, NH_3, SO_2, and NO_2
   [b] the temperature or humidity exceeds those recommended by ROHM
   [c] the Products are exposed to direct sunshine or condensation
   [d] the Products are exposed to high Electrostatic

2. Even under ROHM recommended storage condition, solderability of products out of recommended storage time period may be degraded. It is strongly recommended to confirm solderability before using Products of which storage time is exceeding the recommended storage time period.

3. Store / transport cartons in the correct direction, which is indicated on a carton with a symbol. Otherwise bent leads may occur due to excessive stress applied when dropping of a carton.

4. Use Products within the specified time after opening a humidity barrier bag. Baking is required before using Products of which storage time is exceeding the recommended storage time period.

Precaution for Product Label

A two-dimensional barcode printed on ROHM Products label is for ROHM's internal use only.

Precaution for Disposition

When disposing Products please dispose them properly using an authorized industry waste company.

Precaution for Foreign Exchange and Foreign Trade act

Since concerned goods might be fallen under listed items of export control prescribed by Foreign exchange and Foreign trade act, please consult with ROHM in case of export.

Precaution Regarding Intellectual Property Rights

1. All information and data including but not limited to application example contained in this document is for reference only. ROHM does not warrant that foregoing information or data will not infringe any intellectual property rights or any other rights of any third party regarding such information or data.

2. ROHM shall not have any obligations where the claims, actions or demands arising from the combination of the Products with other articles such as components, circuits, systems or external equipment (including software).

3. No license, expressly or implied, is granted hereby under any intellectual property rights or other rights of ROHM or any third parties with respect to the Products or the information contained in this document. Provided, however, that ROHM will not assert its intellectual property rights or other rights against you or your customers to the extent necessary to manufacture or sell products containing the Products, subject to the terms and conditions herein.

Other Precaution

1. This document may not be reprinted or reproduced, in whole or in part, without prior written consent of ROHM.

2. The Products may not be disassembled, converted, modified, reproduced or otherwise changed without prior written consent of ROHM.

3. In no event shall you use in any way whatsoever the Products and the related technical information contained in the Products or this document for any military purposes, including but not limited to, the development of mass-destruction weapons.

4. The proper names of companies or products described in this document are trademarks or registered trademarks of ROHM, its affiliated companies or third parties.

© 2015 ROHM Co., Ltd. All rights reserved.

Downloaded from Arrow.com.

General Precaution

1. Before you use our Products, you are requested to carefully read this document and fully understand its contents. ROHM shall not be in any way responsible or liable for failure, malfunction or accident arising from the use of any ROHM's Products against warning, caution or note contained in this document.

2. All information contained in this document is current as of the issuing date and subject to change without any prior notice. Before purchasing or using ROHM's Products, please confirm the latest information with a ROHM sales representative.

3. The information contained in this document is provided on an "as is" basis and ROHM does not warrant that all information contained in this document is accurate and/or error-free. ROHM shall not be in any way responsible or liable for any damages, expenses or losses incurred by you or third parties resulting from inaccuracy or errors of or concerning such information.

© 2015 ROHM Co., Ltd. All rights reserved.

Downloaded from Arrow.com.