© – TE Connectivity. All Rights Reserved.

REVISIONS					
P	LTR	DESCRIPTION	DATE	DWN	APVD
	A	REVISED PER ECN-21-125374	05NOV2021	SB	WY

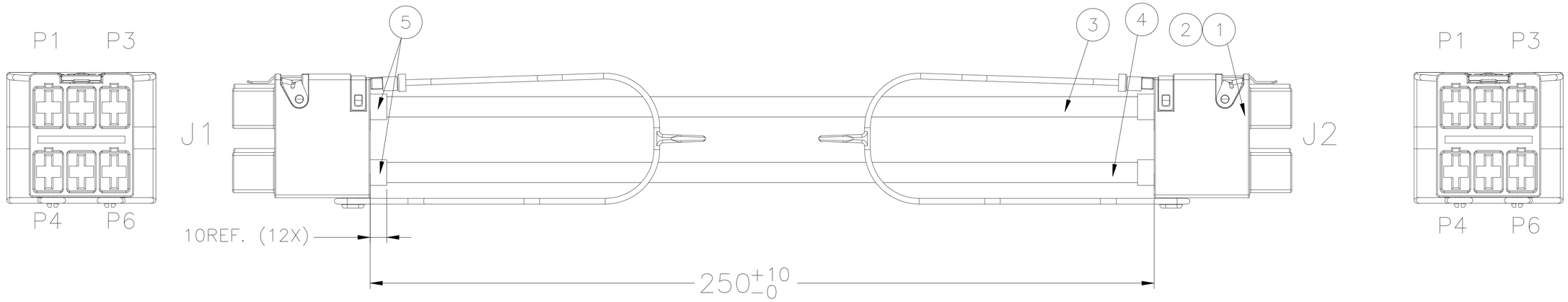

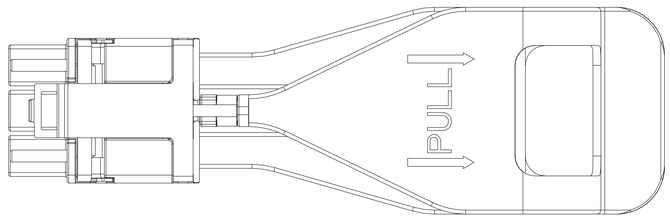

NOTES:

1. 100% ELECTRICAL TEST FOR CONTINUITY, OPENS AND SHORTS.
2. ROHS COMPLIANCE: PRODUCT AND PROCESSING MEETS REQUIREMENTS OF TE SPECIFICATION TEC-138-702.

WIRING CHART		
FROM	TO	COLOR
J1-P1	J2-P3	RED
J1-P2	J2-P2	RED
J1-P3	J2-P1	RED
J1-P4	J2-P6	BLACK
J1-P5	J2-P5	BLACK
J1-P6	J2-P4	BLACK

2370756-1
TE P/N

QTY	U/M	DESCRIPTION	ITEM
0.12	MR	H.S.T ID:5.0MM COLOR:BLACK	5
0.8	MR	UL WIRE 10AWG BLACK, PVC	4
0.8	MR	UL WIRE 10AWG RED, PVC	3
12	PC	CONTACT ELCON MINI, GOLD PLATING	2
2	PC	ELCON MINI 3P CABLE CONN,PULL-TAB	1

THIS DRAWING IS A CONTROLLED DOCUMENT.

DIMENSIONS: mm

TOLERANCES UNLESS OTHERWISE SPECIFIED:
0 PLC ± –
1 PLC ± –
2 PLC ± –
3 PLC ± –
4 PLC ± –
ANGLES ± –

MATERIAL –
FINISH –

DWN KYLIN YAO 09MAR2020
CHK – –
APVD WILLIAM YAO 09MAR2020
PRODUCT SPEC —
APPLICATION SPEC —
WEIGHT 0
CUSTOMER DRAWING

TE Connectivity Ltd.
NAME Cable Assy, 2X3 ELCON MINI
–
–

SIZE	CAGE CODE	DRAWING NO	RESTRICTED TO
A1	00779	C-2370756	—

SCALE N.T.S SHEET 1 OF 1 REV A

4805 (1/15)

Downloaded from Arrow.com.