TRACO POWER

AC/DC Industrial Power Supply

TEX 120 Series, 120 Watt

- **Rugged isolated power supplies for harsh outdoor environments**
- **Dust, water (incl. salt water), ice and oil resistant enclosure**
- **IP67 and NEMA 4X rated**
- **Connection via waterproof I/O plug-connectors**
- **Shock & vibration proof construction**
- **Operating temp. range –40°C to +85°C**
- **DC-OK indicator, voltage adjust**
- **Low ripple and noise**
- **Class I, zone 2 approval incl. ATEX certification**
- **3-year product warranty**

UL 508 IEC 62368-1

These isolated power supplies have been designed particularly for applications in extreme environments. The rugged die-cast aluminum housing is water, ice, oil and dust resistant in compliance with IP67 and NEMA 4X standards. The metal case works as an efficient heatsink allowing full power operation at up to +60°C ambient temperature (no fan required). With a shock and vibration proof construction the power supplies can be mounted directly on a machine. An International safety approval package includes CB scheme as well as ATEX certification for applications in hazardous locations i.e. in chemical or food processing industries. The TEX series offers a cost efficient solution for decentralized power systems in industrial automation applications with critical environment conditions.

Models

Order Code	Output Power max.	Output Voltage nom. (adjustable)	Output Current max.	Efficiency typ.
TEX 120-112	96 W	12 VDC (12.0 - 15.0 VDC)	8'000 mA	87 %
TEX 120-124	120 W	24 VDC (24.0 - 28.0 VDC)	5'000 mA	87 %

Options

TEX-C11	- Optional Cable (Input cable, 2 m): www.tracopower.com/overview/tex-c11
TEX-C21	- Optional Cable (Output cable, 2 m): www.tracopower.com/overview/tex-c21
TEX-P11	- Optional Connector (Binder 4-pin female plug 99-4222-14-04): www.tracopower.com/overview/tex-p11
TEX-P21	- Optional Connector (Binder 7-pin male plug 99-4225-160-07): www.tracopower.com/overview/tex-p21
on demand (backorder with MOQ non stocking item)	- Optional Connector Protection Kit to meet EN/IEC 60079-7: www.tracopower.com/overview/tex-bk

Downloaded from Arrow.com.

Input Specifications

Input Voltage	- AC Range	Operational Range:	85 - 264 VAC (Full Range)
		Rated Range:	100 - 240 VAC (Full Range)
	- DC Range	Operational Range:	85 - 375 VDC (Designed for, no certification)
		Polarity:	irrelevant
Input Frequency		Operational Range:	47 - 63 Hz
		Certified:	50/60 Hz
Power Consumption	- No load & Vin = 230 VAC		2'200 mW max.
	- No load & Vin = 115 VAC		2'200 mW max.
Input Current	- Full load & Vin = 230 VAC		1'000 mA max.
	- Full load & Vin = 115 VAC		2'000 mA max.
Input Inrush Current	- At 230 VAC		25 A max.
	- At 115 VAC		13 A max.
Recommended Input Fuse			5'000 mA (slow blow) (The need of an external fuse has to be assessed in the final application.)

Output Specifications

Output Voltage Adjustment		12 VDC model:	12.0 - 15.0 VDC
		24 VDC model:	24.0 - 28.0 VDC
			(By trim potentiometer) Output power must not exceed rated power!
Regulation	- Input Variation (Vmin - Vmax)		0.5% max.
	- Load Variation (0 - 100%)		0.5% max.
Ripple and Noise (20 MHz Bandwidth)			50 mVp-p max.
Minimum Load			Not required
Hold-up Time	- At 230 VAC		25 ms min.
	- At 115 VAC		20 ms min.
Start-up Time	- At 230 VAC		2'000 ms max.
Short Circuit Protection			Continuous, Automatic recovery
Overload Protection			Constant Current Mode
Output Current Limitation			104 - 135% of Iout max. 110% typ. of Iout max.
Overvoltage Protection			125 - 162% of Vout nom.
Transient Response	- Peak Variation		1500 mV max. (10% to 90% Load Step)
	- Response Time		3'000 µs typ. (10% to 90% Load Step)

All specifications valid at 230 VAC, resistive full load and +25°C after warm-up time, unless otherwise stated.

Downloaded from Arrow.com.

Safety Specifications

Standards	- IT / Multimedia Equipment	EN 60950-1 EN 62368-1 IEC 60950-1 IEC 62368-1
	- Industrial Control Equipment	UL 508
	- Machines Equipment	EN 60204 EN 60204-3
	- ATEX	EN 60079-0 EN 60079-7 EX II 3G Ex ec IIC T4 Gc
	- HazLoc	UL 60079-15 Class I; Div 2; Groups A,B,C,D; T4
	- Power Installation	EN 50178
	- Measurement, Control & Lab.	EN 61010-1 EN 61010-2-201 IEC 61010-1 IEC 61010-2-201 UL 61010-1
	- Power Transformers	EN 61558-2-8
	- Certification Documents	www.tracopower.com/tex120-safety-cert (When operating in ex environments such as ATEX, Hazloc, etc.: Check certification documents for special conditions for safe use.)
Protection Class		Class I (Prepared): Connection to PE See application note: www.tracopower.com/info/protection-class.pdf
Energy Source	- Output, acc. to 62368-1	ES1
Power Source	- Output, acc. to 62368-1	PS3
Pollution Degree		PD 4
Over Voltage Category		OVC II

EMC Specifications

EMI (Emissions)		EN 61000-6-3 (Generic Residential) EN 61204-3 (Low Voltage Power Supplies)
	- Conducted Emissions	EN 55032 class A (internal filter) EN 55032 class B (internal filter)
	- Radiated Emissions	EN 55032 class A (internal filter) EN 55032 class B (internal filter)
EMS (Immunity)		EN 61000-6-2 (Generic Industrial) EN 61204-3 (Low Voltage Power Supplies)
	- Electrostatic Discharge	Air: EN 61000-4-2, ±15 kV, perf. criteria A Contact: EN 61000-4-2, ±8 kV, perf. criteria A
	- RF Electromagnetic Field	EN 61000-4-3, 10 V/m, perf. criteria A
	- EFT (Burst) / Surge	EN 61000-4-4, ±4 kV, perf. criteria A L to L: EN 61000-4-5, ±2 kV, perf. criteria A L to PE: EN 61000-4-5, ±4 kV, perf. criteria A
	- Conducted RF Disturbances	EN 61000-4-6, 10 Vrms, perf. criteria A
	- Voltage Dips & Interruptions	115 VAC / 60 Hz: EN 61000-4-11 30%, 0.5 periods, perf. criteria B 60%, 5 periods, perf. criteria C
	- Voltage Sag Immunity	SEMI F47, criteria A
EMC / Environmental	- Certification Documents	www.tracopower.com/tex120-emc-cert

General Specifications

Relative Humidity	100% max.

All specifications valid at 230 VAC, resistive full load and +25°C after warm-up time, unless otherwise stated.

Downloaded from Arrow.com.

Temperature Ranges	- Operating Temperature	−40°C to +85°C
	- Approved Ambient Temp.	ATEX: +70°C max.
	- Storage Temperature	−40°C to +85°C
Power Derating	- High Temperature	2.0 %/K above 60°C
	- Low Input Voltage	0.33 %/V below 120 VDC (24 Vout model / DC supply only)
Cooling System		Natural convection (20 LFM)
Altitude During Operation		3'000 m max.
Switching Frequency		100 - 190 kHz (PWM)
Insulation System		Reinforced Insulation
Isolation Test Voltage	- Input to Output, 60 s	4'000 VDC
	- Input to Case or PE, 60 s	2'500 VDC
Creepage	- Input to Output	8 mm min.
Clearance	- Input to Output	8 mm min.
Reliability	- Calculated MTBF	900'000 h (IEC 61709)
Environment	- Vibration	IEC 60068-2-6 1 g, 3 axis, sine sweep, 10-55 Hz, 1 oct/min
	- Mechanical Shock	IEC 60068-2-27 15 g, 3 axis, half sine, 11 ms
Case Ingress Protection		IP 67 (acc. IEC 60529) NEMA 4X UL 50 Water intrusion test Dust test Icing test Oil exclusion test Salt spray test Gasket aging test Hosedown test
Housing Type		Metal Case
Mounting Type		Chassis Mount
Connection Type		Pin Connector
Weight		1'000 g
Environmental Compliance	- REACH Declaration	www.tracopower.com/info/reach-declaration.pdf REACH SVHC list compliant REACH Annex XVII compliant
	- RoHS Declaration	www.tracopower.com/info/rohs-declaration.pdf Exemptions: 7(a), 7(c)-I (RoHS exemptions refer to the component concentration only, not to the overall concentration in the product (O5A rule).)
	- SCIP Reference Number	51c60289-03f1-409c-b596-1e9efd5b7154

Additional Information

Supporting Documents	www.tracopower.com/overview/tex120
Frequently Asked Questions	www.tracopower.com/glossary-faq
Glossary	www.tracopower.com/info/glossary.pdf

All specifications valid at 230 VAC, resistive full load and +25°C after warm-up time, unless otherwise stated.

Downloaded from Arrow.com.

Outline Dimensions

Standard version

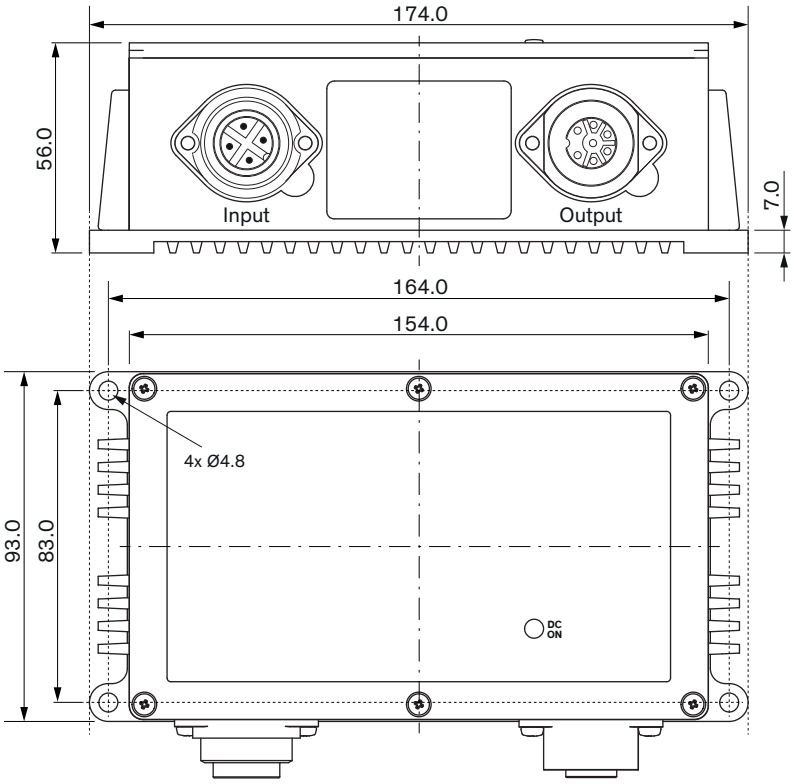

Mounting screw tightening torque: 2.0 - 2.4 Nm

To access the trim potentiometer, the cover has to be removed.
Please refer to the installation manual.

Dimensions in mm
Tolerances: ±0.50

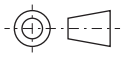

Please ensure that the TEX 120 is installed with the connectors facing downwards.

Pinout

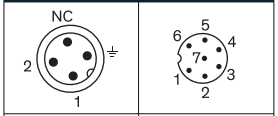

Input		Output	
1	L	**1-3**	–
2	N	**4-6**	+
⏚	PE	**7**	case

NC: Not connected

Connectors not included!
(Units are supplied with sealing connector caps)

All specifications valid at 230 VAC, resistive full load and +25°C after warm-up time, unless otherwise stated.

Downloaded from Arrow.com.

With on-demand Mechanical protection kit TEX-BK

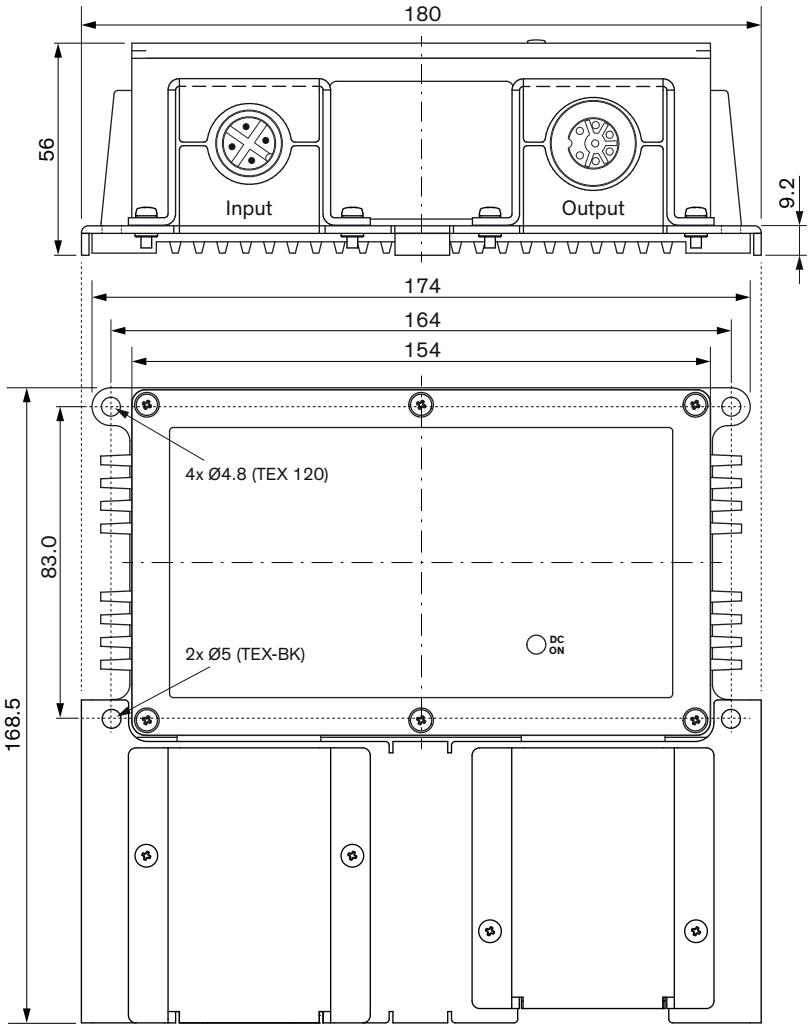

Pinout

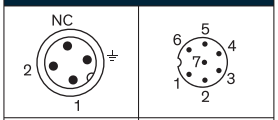

Input		Output	
1	L	**1-3**	–
2	N	**4-6**	+
⏚	PE	**7**	case

NC: Not connected

Connectors not included!
(Units are supplied with sealing connector caps)

Mounting screw tightening torque TEX 120: 2.0 - 2.4 Nm
Mounting screw tightening torque TEX-BK: 1.2 Nm

Dimensions in mm
Tolerances TEX 120: ±0.50
Tolerances TEX-BK: ±1

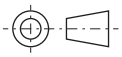

To access the trim potentiometer, the cover has to be removed.
Please refer to the installation manual.

Please ensure that the TEX 120 is installed with the connectors facing downwards.
Connectors not included.

If the equipment is not assembled with the optional mechanical protection kit TEX-BK, the equipment must be installed in an enclosure that provides a minimum ingress protection of IP54 (according to EN ICE 60079-0).

© Copyright 2025 Traco Electronic AG

Downloaded from Arrow.com.