IRF9Z34NPbF

$V_{(BR)DSS}$	-55V
$R_{DS(on)}$ max.	0.10Ω
I_D	-19A

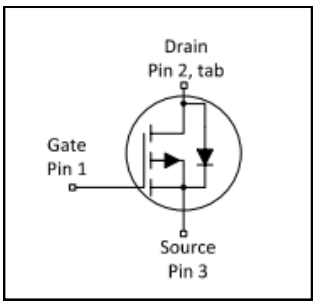

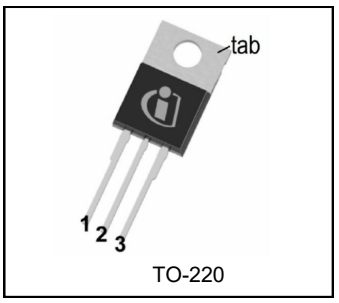

Features

- Advanced Process Technology
- Dynamic dv/dt Rating
- 175°C Operating Temperature
- Fast Switching
- P-Channel
- Fully Avalanche Rated
- Lead-Free

Description

Fifth Generation HEXFET Power MOSFETs utilizes advanced processing techniques to achieve extremely low on-resistance per silicon area. This benefit combined with the fast switching speed and ruggedized device design that HEXFET power MOSFETs are well known for, provides the designer with an extremely efficient and reliable device for use in a wide variety of other applications.

The TO-220 package is universally preferred for all commercial-industrial applications at power dissipation levels to approximately 50 watts. The low thermal resistance and low package cost of TO-220 contributes to the wide acceptance throughout the industry.

Base part number	Package Type	Standard Pack		Orderable Part Number
		Form	Quantity	
IRF9Z34NPbF	TO-220	Tube	50	IRF9Z34NPbF

Symbol	Parameter	Max.	Units
I_D @ T_C = 25°C	Continuous Drain Current, V_{GS} @ -10V	-19	A
I_D @ T_C = 100°C	Continuous Drain Current, V_{GS} @ -10V	-14	
I_{DM}	Pulsed Drain Current ①	-68	
P_D @T_C = 25°C	Maximum Power Dissipation	68	W
	Linear Derating Factor	0.45	W/°C
V_{GS}	Gate-to-Source Voltage	± 20	V
E_{AS}	Single Pulse Avalanche Energy ②	180	mJ
I_{AR}	Avalanche Current ①	-10	A
E_{AR}	Repetitive Avalanche Energy ①	6.8	mJ
dv/dt	Peak Diode Recovery dv/dt③	-5.0	V/ns
T_J T_{STG}	Operating Junction and Storage Temperature Range	-55 to + 175	°C
	Soldering Temperature, for 10 seconds (1.6mm from case)	300	
	Mounting torque, 6-32 or M3 screw	10 lbf•in (1.1N•m)	

Thermal Resistance

Symbol	Parameter	Typ.	Max.	Units
$R_{\theta JC}$	Junction-to-Case	——	2.2	°C/W
$R_{\theta CS}$	Case-to-Sink, Flat, Greased Surface	0.50	——	
$R_{\theta JA}$	Junction-to-Ambient	——	62	

Downloaded from Arrow.com.

Static @ T_J = 25°C (unless otherwise specified)

	Parameter	Min.	Typ.	Max.	Units	Conditions
$V_{(BR)DSS}$	Drain-to-Source Breakdown Voltage	-55	——	——	V	V_{GS} = 0V, I_D = -250μA
$\Delta V_{(BR)DSS}/\Delta T_J$	Breakdown Voltage Temp. Coefficient	——	-0.05	——	V/°C	Reference to 25°C, I_D = -1mA
$R_{DS(on)}$	Static Drain-to-Source On-Resistance	——	——	0.10	Ω	V_{GS} = -10V, I_D = -10A ④
$V_{GS(th)}$	Gate Threshold Voltage	-2.0	——	-4.0	V	V_{DS} = V_{GS}, I_D = -250μA
gfs	Forward Trans conductance	4.2	——	——	S	V_{DS} = -25V, I_D = -10A④
I_{DSS}	Drain-to-Source Leakage Current	——	——	-25	μA	V_{DS} = -55V, V_{GS} = 0V
		——	——	-250		V_{DS} = -44V,V_{GS} = 0V,T_J =150°C
I_{GSS}	Gate-to-Source Forward Leakage	——	——	-100	nA	V_{GS} = -20V
	Gate-to-Source Reverse Leakage	——	——	100		V_{GS} = 20V

Dynamic Electrical Characteristics @ T_J = 25°C (unless otherwise specified)

Q_g	Total Gate Charge	——	——	35	nC	I_D = -10A
Q_{gs}	Gate-to-Source Charge	——	——	7.9		V_{DS} = -44V
Q_{gd}	Gate-to-Drain Charge	——	——	16		V_{GS} = -10V, See Fig.6 and 13 ④
$t_{d(on)}$	Turn-On Delay Time	——	13	——	ns	V_{DD} = -28V
t_r	Rise Time	——	55	——		I_D = -10A
$t_{d(off)}$	Turn-Off Delay Time	——	30	——		R_G= 13Ω
t_f	Fall Time	——	41	——		R_D= 2.6Ω , See Fig.10④
L_D	Internal Drain Inductance	——	4.5	——	nH	Between lead, 6mm (0.25in.) from package and center of die contact 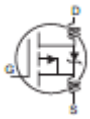
L_S	Internal Source Inductance	——	7.5	——		
C_{iss}	Input Capacitance	——	620	——	pF	V_{GS} = 0V
C_{oss}	Output Capacitance	——	280	——		V_{DS} = -25V
C_{rss}	Reverse Transfer Capacitance	——	140	——		f = 1.0MHz, See Fig.5

Diode Characteristics

	Parameter	Min.	Typ.	Max.	Units	Conditions
I_S	Continuous Source Current (Body Diode)	——	——	-19	A	MOSFET symbol showing the integral reverse p-n junction diode. 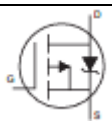
I_{SM}	Pulsed Source Current (Body Diode) ①	——	——	-68		
V_{SD}	Diode Forward Voltage	——	——	-1.6	V	T_J = 25°C,I_S = -10A,V_{GS} = 0V ④
t_{rr}	Reverse Recovery Time	——	54	82	ns	T_J = 25°C ,I_F = -10A
Q_{rr}	Reverse Recovery Charge	——	110	160	nC	di/dt = 100A/μs ④

Notes:

① Repetitive rating; pulse width limited by max. junction temperature. (See fig. 11).

② Starting T_J = 25°C, L = 3.6mH, R_G = 25Ω, I_{AS} = -10A.(See fig. 12).

③ $I_{SD} \leq$ -10A, di/dt $\leq$ -290A/μs, $V_{DD} \leq V_{(BR)DSS}$, $T_J \leq$ 175°C.

④ Pulse width $\leq$ 300μs; duty cycle $\leq$ 2%.

Downloaded from Arrow.com.

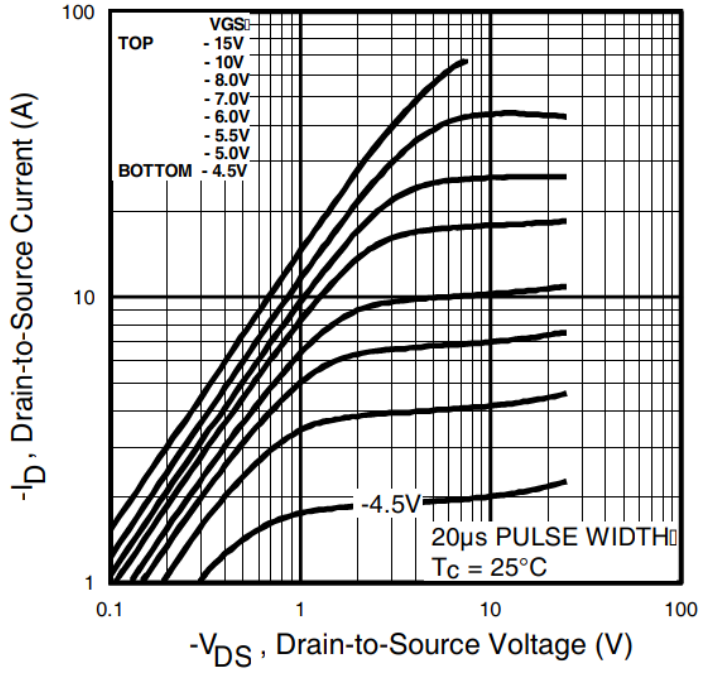

Fig. 1 Typical Output Characteristics

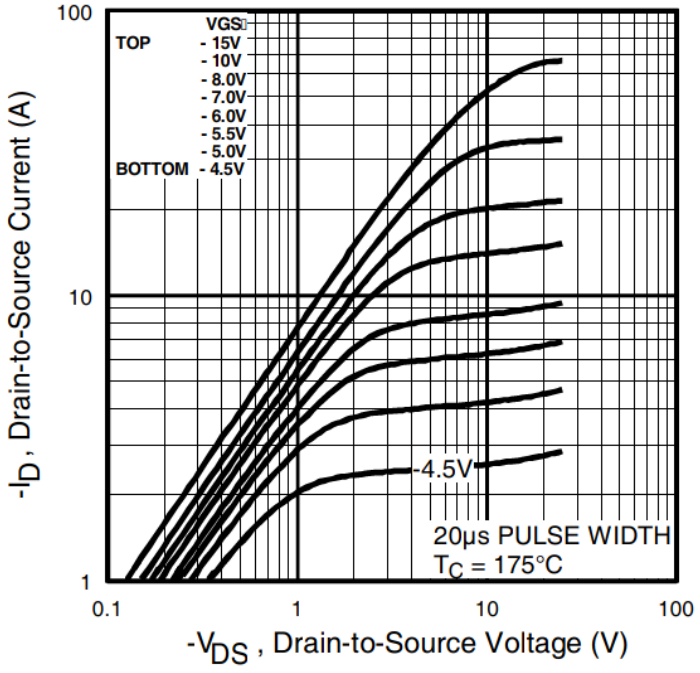

Fig. 2 Typical Output Characteristics

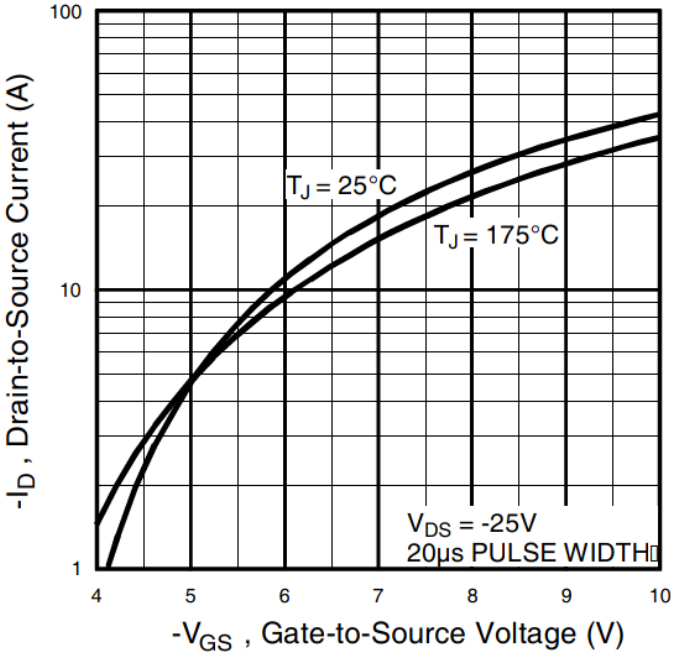

Fig. 3 Typical Transfer Characteristics

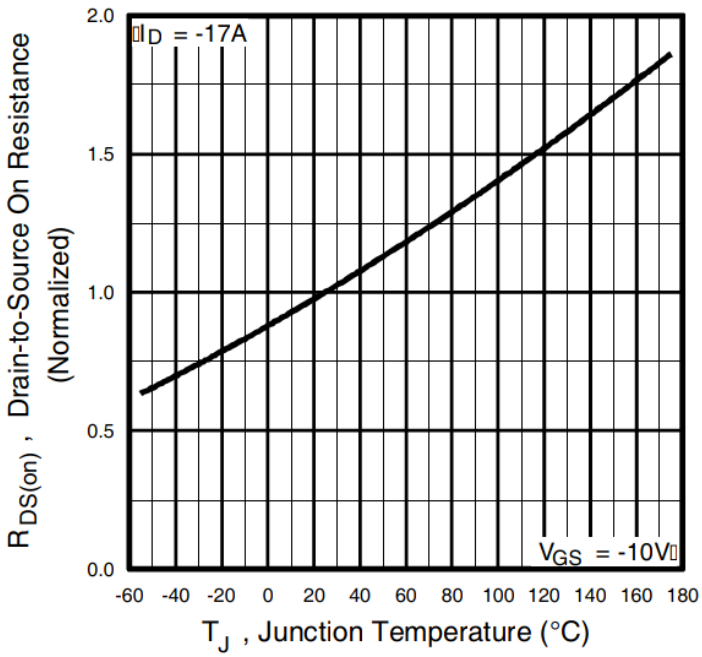

Fig. 4 Normalized On-Resistance vs. Temperature

Downloaded from Arrow.com.

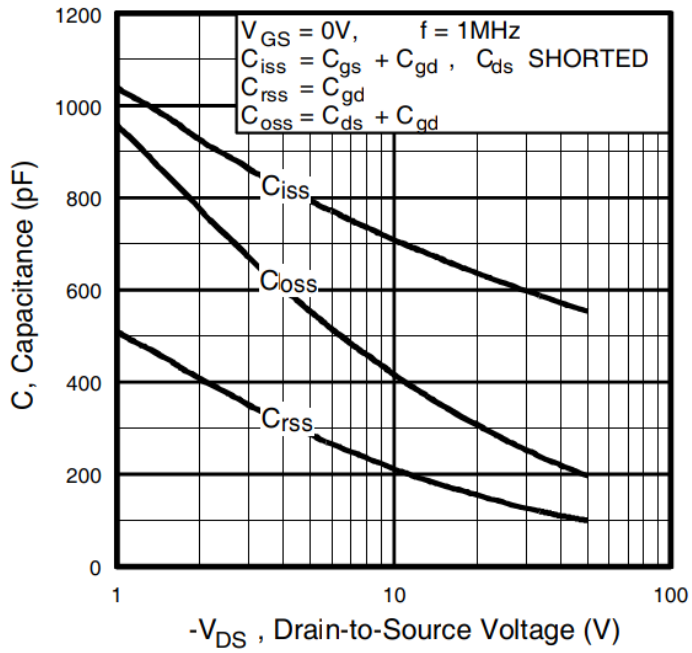

Fig 5. Typical Capacitance vs. Drain-to-Source Voltage

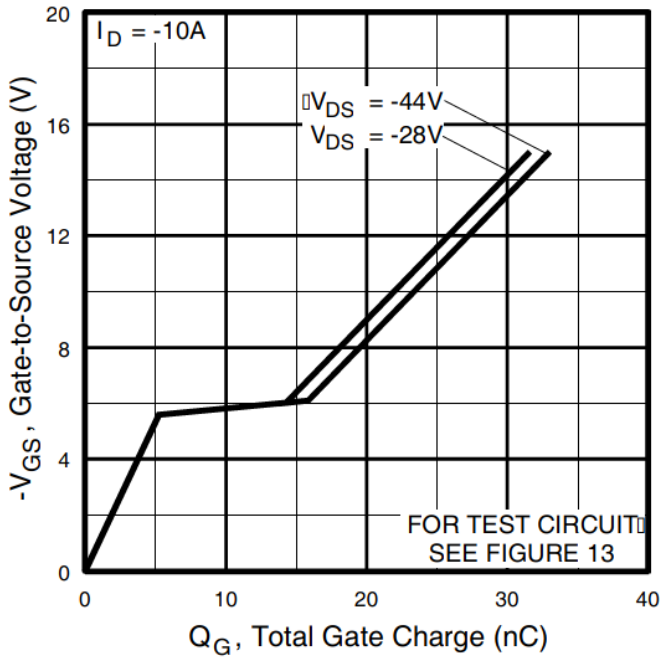

Fig 6. Typical Gate Charge vs. Gate-to-Source Voltage

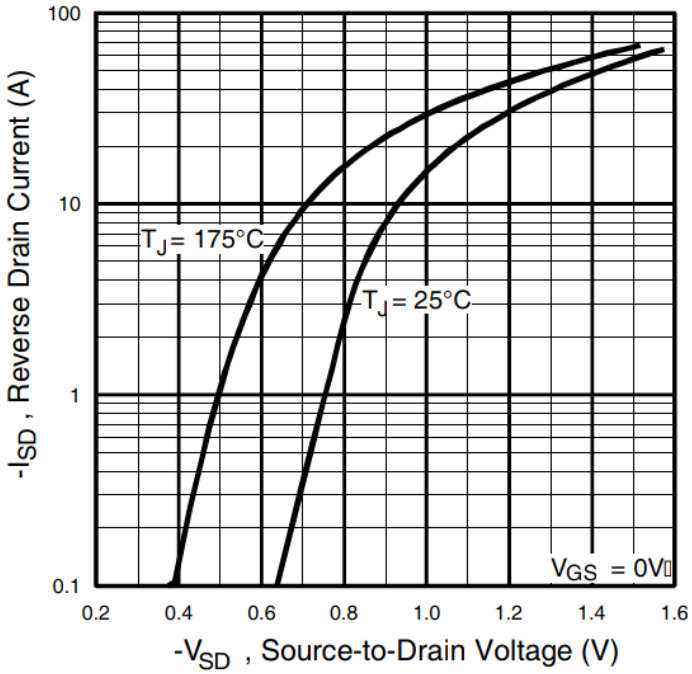

Fig. 7 Typical Source-to-Drain Diode Forward Voltage

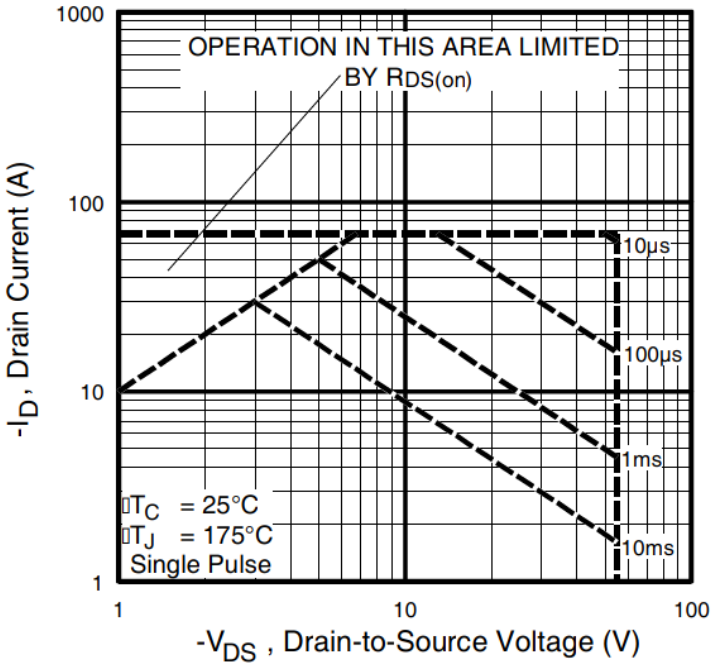

Fig 8. Maximum Safe Operating Area

Downloaded from Arrow.com.

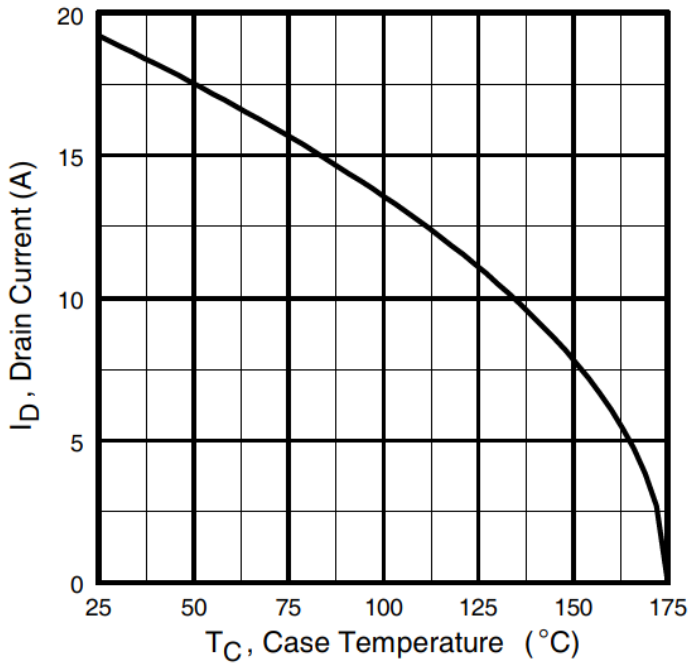

Fig 9. Maximum Drain Current vs. Case Temperature

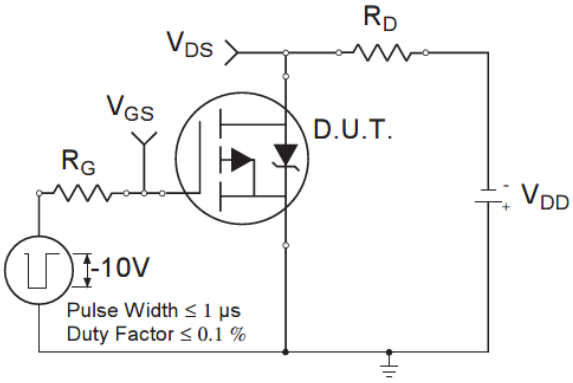

Fig 10a. Switching Time Test Circuit

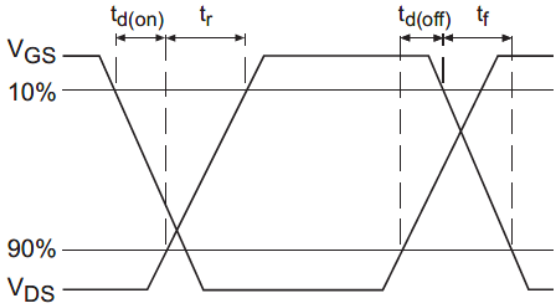

Fig 10a. Switching Time Waveforms

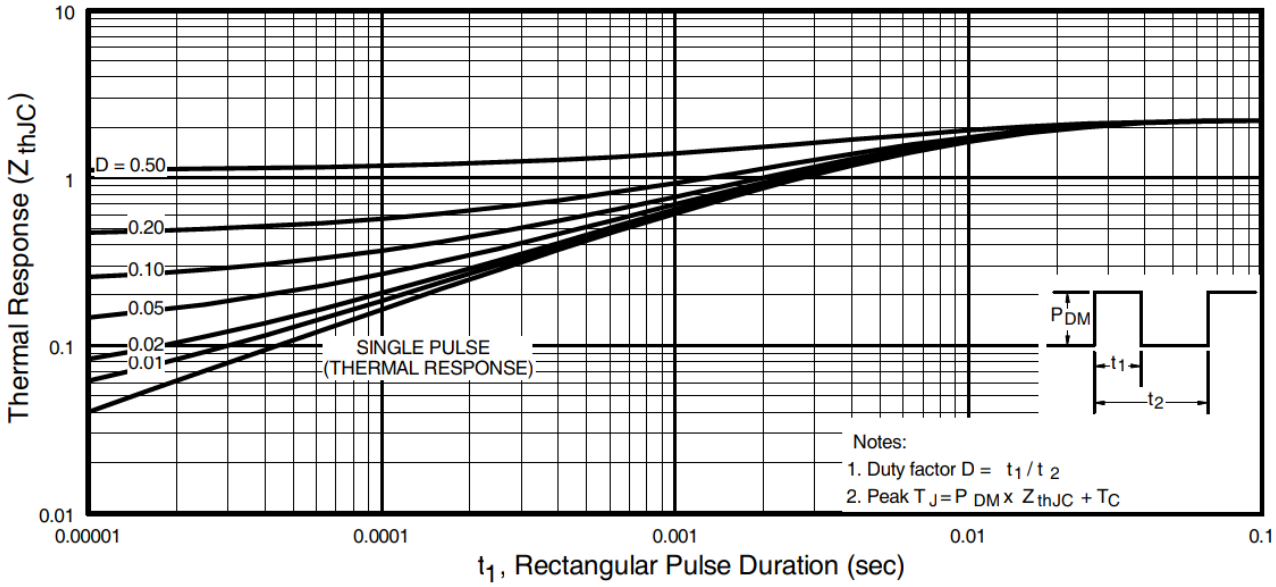

Fig 11. Maximum Effective Transient Thermal Impedance, Junction-to-Case

Downloaded from Arrow.com.

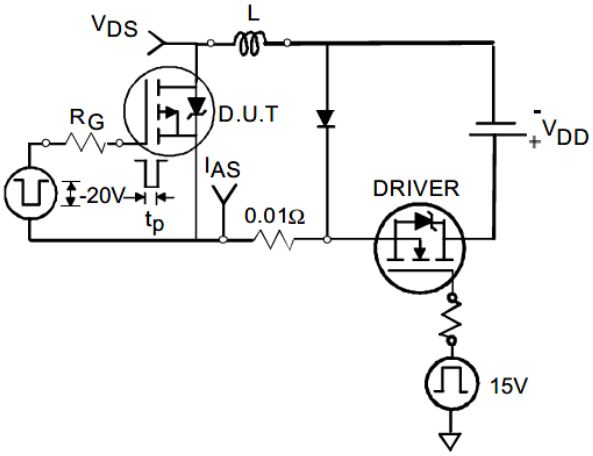

Fig. 12a. Unclamped Inductive Test Circuit

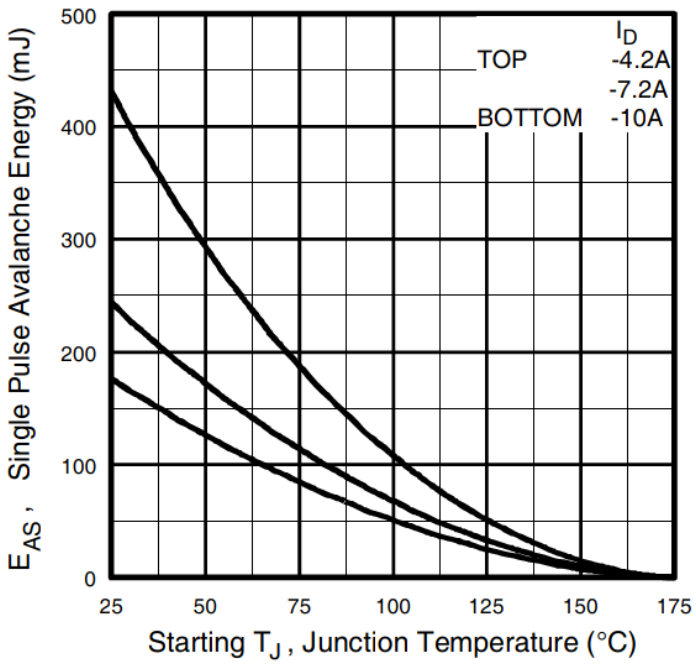

Fig 12c. Maximum Avalanche Energy vs. Drain Current

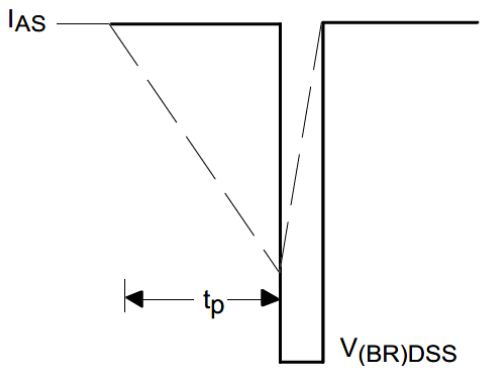

Fig. 12b. Unclamped Inductive Waveforms

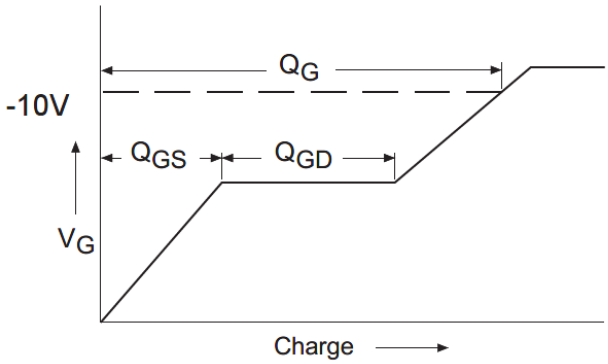

Fig 13a. Basic Gate Charge Waveform

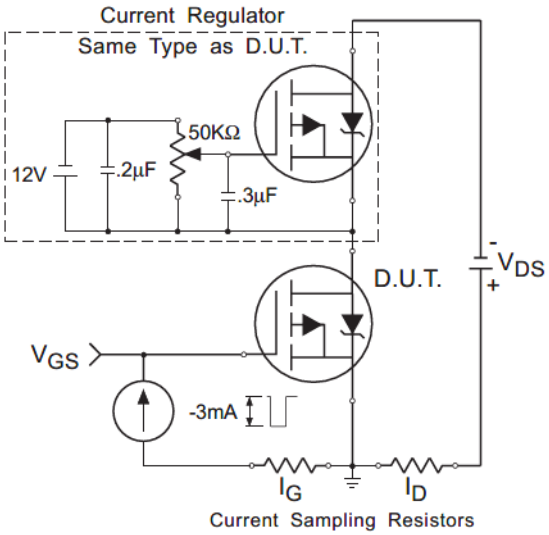

Fig 13b. Gate Charge Test Circuit

Downloaded from Arrow.com.

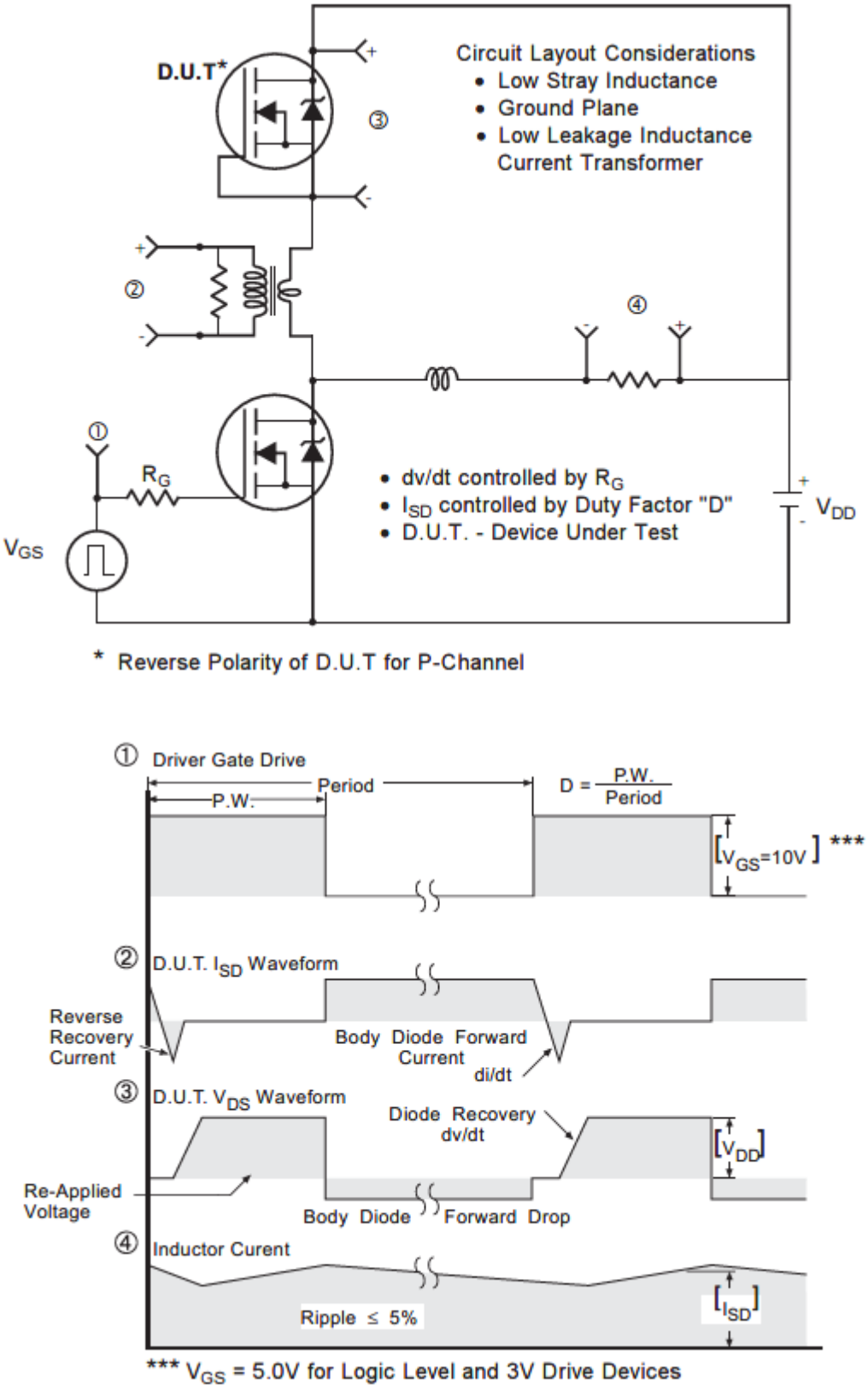

Fig 14. Peak Diode Recovery dv/dt Test Circuit for P-Channel

HEXFET® Power MOSFETs

Downloaded from Arrow.com.

TO-220 Package Outline (Dimensions are shown in millimeters (inches))

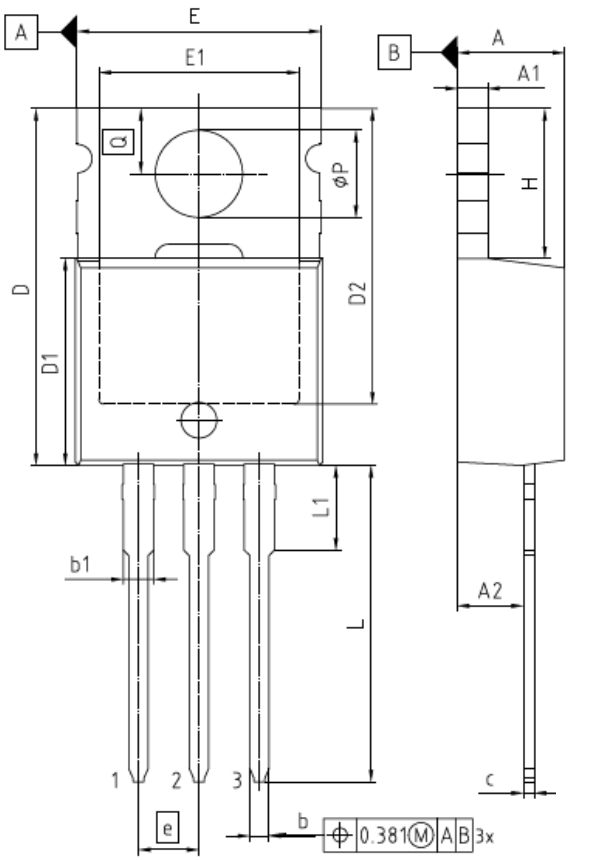

NOTES:
DIMENSIONS DO NOT INCLUDE MOLD FLASH, PROTRUSION OR GATE BURRS
GATE BURRS ARE LESS THAN 0.5 mm

PACKAGE - GROUP NUMBER:	PG-TO220-3-U05	
DIMENSIONS	MILLIMETERS	
	MIN.	MAX.
A	3.56	4.83
A1	1.14	1.40
A2	2.03	2.92
b	0.38	1.01
b1	1.14	1.78
c	0.36	0.61
D	14.22	16.51
D1	8.38	9.20
D2	11.68	12.88
E	9.65	10.67
E1	6.86	8.89
e	2.54	
N	3	
H	5.84	6.86
L	12.70	14.73
L1	3.56	4.06
øP	3.54	4.08
Q	2.54	3.42

TO-220 Part Marking Information

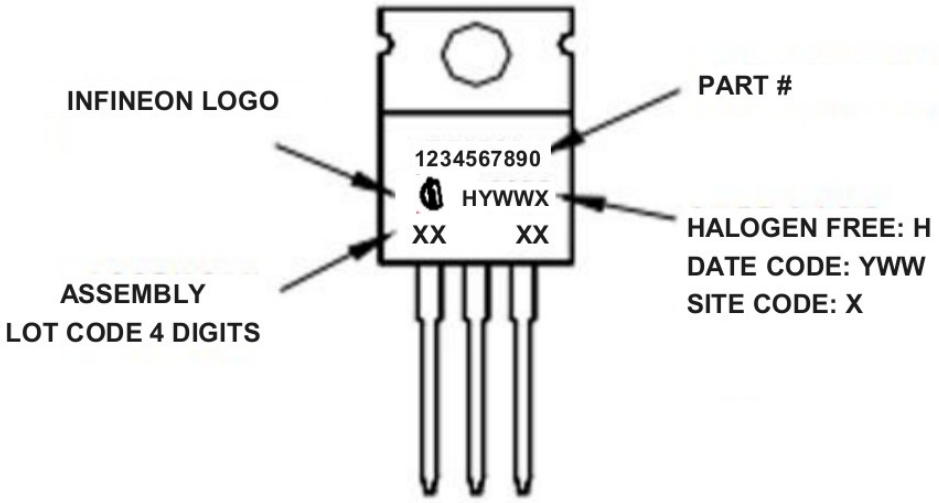

TO-220 packages are not recommended for Surface Mount Application.

Downloaded from Arrow.com.

Revision History

Date	Rev.	Comments
2026-07-28	2.1	• Update datasheet to Infineon format • Updated Package Outline and Part marking –page 8 • Added disclaimer on last page.

Trademarks

All referenced product or service names and trademarks are the property of their respective owners.

We Listen to Your Comments

Any information within this document that you feel is wrong, unclear or missing at all? Your feedback will help us to continuously improve the quality of this document. Please send your proposal (including a reference to this document) to:
erratum@infineon.com

Published by
Infineon Technologies AG
81726 München, Germany
© 2024 Infineon Technologies AG
All Rights Reserved.

Legal Disclaimer

The information given in this document shall in no event be regarded as a guarantee of conditions or characteristics

("Beschaffenheitsgarantie").

With respect to any examples, hints or any typical values stated herein and/or any information regarding the application of the product, Infineon Technologies hereby disclaims any and all warranties and liabilities of any kind, including without limitation warranties of non-infringement of intellectual property rights of any third party.

In addition, any information given in this document is subject to customer's compliance with its obligations stated in this document and any applicable legal requirements, norms and standards concerning customer's products and any use of the product of Infineon Technologies in customer's applications.

The data contained in this document is exclusively intended for technically trained staff. It is the responsibility of customer's technical departments to evaluate the suitability of the product for the intended application and the completeness of the product information given in this document with respect to such application.

Information

For further information on the product, technology, delivery terms and conditions and prices please contact your nearest Infineon Technologies office (www.infineon.com).

Warnings

Due to technical requirements products may contain dangerous substances. For information on the types in question please contact your nearest Infineon Technologies office.

The Infineon Technologies component described in this Data Sheet may be used in life support devices or systems and or automotive, aviation and aerospace applications or systems only with the express written approval of Infineon Technologies, if a failure of such components can reasonably be expected to cause the failure of that life support, automotive, aviation and aerospace device or system or to affect the safety or effectiveness of that device or system. Life support devices or systems are intended to be implanted in the human body or to support and/or maintain and sustain and/or protect human life. If they fail, it is reasonable to assume that the health of the user or other persons may be endangered.

Downloaded from Arrow.com.