REVISIONS					
REV	ECO	DESCRIPTION	DATE	BY	APPR
A1	-	FIRST RELEASE	Sep.07,2015	Drack	Tommy

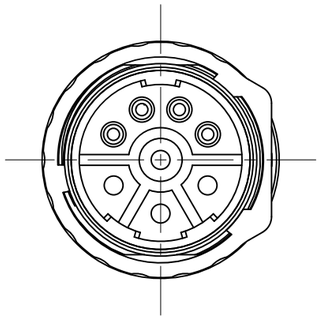

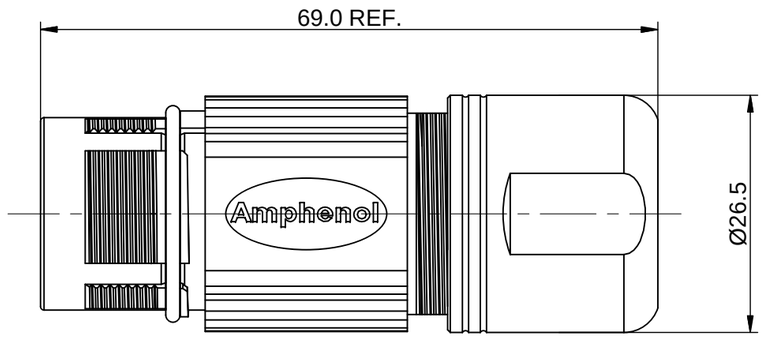

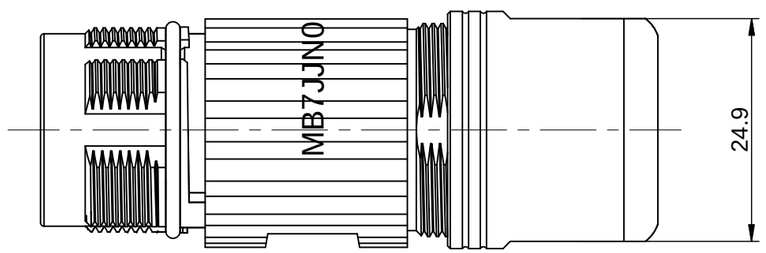

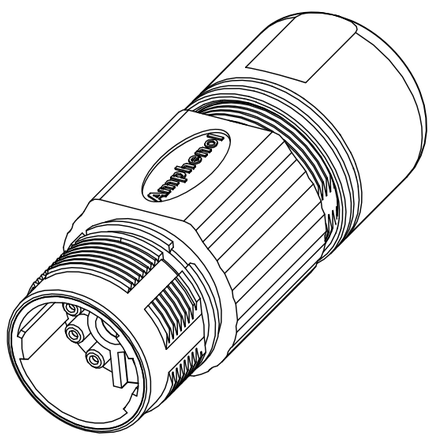

NOTES: UNLESS OTHERWISE SPECIFIED

1. MATERIAL:
   INSULATION INSERT:PA66,UL94 V0
   SEAL: VITON, SILICONE, EPDM
   HOUSING BODY: ZINC DIE CAST, NICKEL PLATED

2. SPECIFICATIONS:
   2.1 CURRENT RATING: SIGNAL: 10 AMPS
   POWER: 30AMPS
   2.2 VOLTAGE RATING: SIGNAL: 250V AC/DC
   POWER: 630V AC/DC
   2.3 OPERATING TEMPERATURE: -20°C TO +130°C
   2.4 DIELECTRIC WITHSTANDING VOLTAGE: LESS THAN 2 MILLIAMPS CURRENT LEAKAGE @ SIGNAL: 2500VOLTS AC.
   POWER: 6000 VOLTS AC.
   2.5 DEGREE OF PROTECTION: IP67 (MATED CONDITION)
   2.6 DEGREE OF POLLUTION: 3 PER UL840
   2.7 OVERVOLTAGE CATEGORY: III PER UL840
   2.8 MATING CYCLE DURABILITY: >500 CYCLES
   2.9 RoHS COMPLIANT

3. ALL DIMENSIONS ARE FOR REFERENCE USE ONLY.

Item	Part number	Cable OD Range
1	MB7JJN0800-S1	7.5~11.0 mm
2	MB7JJN0800-S2	11.0~14.5 mm
3	MB7JJN0800-S3	14.5~17.0 mm

QUANTITY	PART NUMBER	DESCRIPTION	ITEM
	SEE PART NUMBER CHART		

MATERIALS LIST

UNLESS OTHERWISE SPECIFIED
1) All dimensions are in metric(mm).
2) Tolerances are as follows:
1 PL DEC ±0.30 | Fractions ±1/64
2 PL DEC ±0.15 | Angles ±1°
3 PL DEC ±0.08
3) Note reference = X

MATERIAL SPECIFICATIONS:

PROCESS SPECIFICATIONS:

NEXT ASS'Y:

SIGNATURES		DATE
DRAWN:	Drack	Sep.07,2015
CHECKED:		
ENGINEER:		
APPROVAL:		
CUSTOMER:		

THIS DRAWING IS SUPPLIED FOR INFORMATION ONLY. DESIGN FEATURES, SPECIFICATIONS AND PERFORMANCE DATA SHOWN HEREON ARE THE PROPERTY OF THE AMPHENOL CORPORATION. NO RIGHTS OF REPRODUCTION ARE IMPLIED. ALL DIMENSIONS ARE SUBJECT TO NORMAL MANUFACTURING VARIATIONS.

Amphenol

Sine Systems - www.amphenol-sine.com
44724 Morley Drive
Clinton Township, MI 48036

M23B,RECEPTACLE,STR,8POS(4+4)

SIZE	TYPE	DWG NO:	REVISION
B	C-	MB7JJN0800-Sx	A1

SCALE: NONE SHEET 1 OF 1

TITLE: M23B,RECEPTACLE,STR,8POS(4+4)
DWG NO: MB7JJN0800-Sx
REV: A1
SH: 1
OF: 1

Downloaded from Arrow.com.