Data Sheet | Item Number: 2060-453/998-404

SMD PCB terminal block; push-button; 0.75 mm²; Pin spacing 4 mm; 3-pole; Push-in CAGE CLAMP®; in tape-and-reel packaging; white

https://www.wago.com/2060-453/998-404

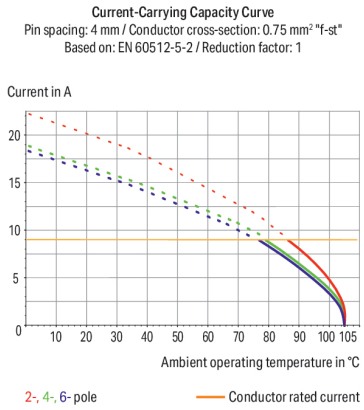

Color: white

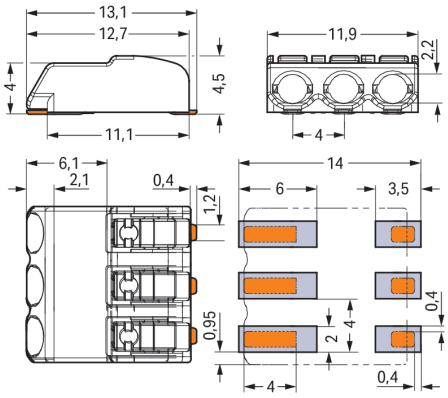

Dimensions in mm

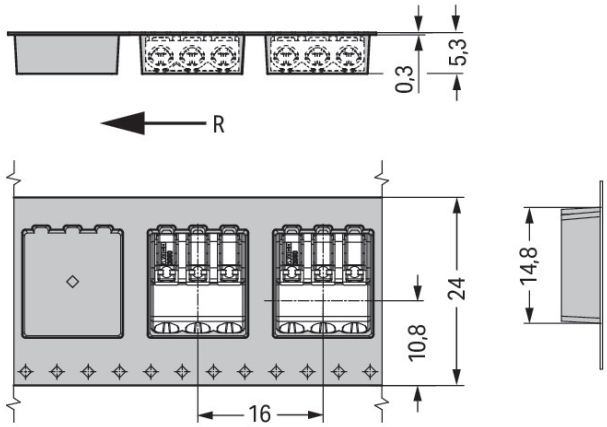

Dimensions in mm
R = feed direction

PCB terminal block, 2060 Series, white

Our PCB terminal block (item number 2060-453/998-404) is designed for seamless electrical installations. It is a universal connector that can be used almost anywhere, e.g., as a pluggable PCB connector, panel feedthrough header, connector for rail-mount terminal blocks, or a floating connector for different mounting methods. Strip lengths must be between 7 and 9 mm when connecting conductors to this PCB terminal block. This product features one conductor terminal and utilizes Push-in CAGE CLAMP®. Push-in CAGE CLAMP® connection technology is ideal for connecting all conductor types. Both solid and fine-stranded conductors with ferrules can be inserted without needing to use any tools—all thanks to its pluggable design. Dimensions: (11.9 x 4.5 x 13.1) mm (width x height x depth). Depending on the type of conductor, this PCB terminal block is ideal for conductor cross sections ranging from 0.2 mm² to 0.75 mm².

Tin is used for coating the contact surfaces. This PCB terminal block is operated with a push-button. SMD is used to assemble the PCB terminal block. The conductor is designed to be inserted into the board at an angle of 0°..

Downloaded from Arrow.com.

Notes

Note	Application notes: Suitable for lead-free, reflow-soldering profiles per DIN EN 61760-1 and IEC 60068-2-58 up to max. 260°C peak temperature. Due to application-specific variables (component configuration and orientation, type of soldering machine, solder paste), trial runs are recommended to ensure product and process compatibility under actual manufacturing conditions. Depending on reflow soldering temperatures and times, color deviations may occur. These deviations will have no impact on functionality.
Recommendation	Recommendation for stencil: 150 µm material thickness; Pattern layout identical to solder pad layout

Electrical data

Ratings per	IEC/EN 60664-1		
Overvoltage category	III	III	II
Pollution degree	3	2	2
Nominal voltage	63 V	160 V	320 V
Rated impulse withstand voltage	2.5 kV	2.5 kV	2.5 kV
Rated current	9 A	9 A	9 A

Ratings	
Approvals per	UL 1977
Rated voltage	600 V
Rated current	9 A

Connection Data

Clamping units	3
Total number of potentials	3
Number of connection types	1
Number of levels	1

Connection 1

Connection technology	Push-in CAGE CLAMP®
Actuation type	Push-button
Solid conductor	0.2 … 0.75 mm² / 24 … 18 AWG
Fine-stranded conductor	0.2 … 0.75 mm² / 24 … 18 AWG
Fine-stranded conductor; with insulated ferrule	0.25 … 0.34 mm²
Fine-stranded conductor; with uninsulated ferrule	0.25 … 0.34 mm²
Strip length	7 … 9 mm / 0.28 … 0.35 inches
Conductor connection direction to PCB	0 °
Pole number	3

Physical data

Pin spacing	4 mm / 0.157 inches
Width	11.9 mm / 0.469 inches
Height	4.5 mm / 0.177 inches
Depth	13.1 mm / 0.516 inches
Reel diameter of tape-and-reel packaging	330 mm
Tape width	24 mm

PCB contact

PCB contact	SMD
Solder pin arrangement	over the entire terminal strip (in-line)
Number of solder pins per potential	2

Downloaded from Arrow.com.

Material data

Note (material data)	Information on material specifications can be found here
Color	white
Material group	I
Insulation material (main housing)	Polyphthalamide (PPA GF)
Flammability class per UL94	V0
Clamping spring material	Copper alloy
Contact material	Copper alloy
Contact Plating	Tin
Fire load	0.005 MJ
Weight	0.8 g
MSL per J-STD 020D	1

Environmental requirements

Limit temperature range	-60 … +105 °C

Environmental Testing

Test specification: Railway applications – Rolling stock – Electronic equipment	DIN EN 50155 (VDE 0115-200):2022-06
Test procedure: Railway applications – Rolling stock equipment – Vibration and shock tests	DIN EN 61373 (VDE 0115-0106):2011-04
Spectrum/Mounting location	Service life test, Category 1, Class A/B
Functional test with noise-like oscillations	Test passed according to Section 8 of the standard
Frequency	f_1 = 5 Hz to f_2 = 150 Hz
Acceleration	0.101g (highest test level used for all axes)
Test duration per axis	10 min.
Test directions	X, Y and Z axes
Monitoring of contact faults and interruptions	Passed
Voltage drop measurement before and after each axis	Passed
Simulated service life test through increased levels of noise-like oscillations	Test passed according to Section 9 of the standard
Frequency	f_1 = 5 Hz to f_2 = 150 Hz
Acceleration	0.572g (highest test level used for all axes)
Test duration per axis	5 h
Test directions	X, Y and Z axes
Extended testing: Monitoring of contact faults and interruptions	Passed
Extended testing: Voltage drop measurement before and after each axis	Passed
Shock test	Test passed according to Section 10 of the standard
Shock pulse form	Half sine
Acceleration	5g (highest test level used for all axes)
Shock duration	30 ms
Number of shocks (per axis)	3 pos. und 3 neg.
Test directions	X, Y and Z axes
Extended testing: Monitoring of contact faults and interruptions	Passed
Extended testing: Voltage drop measurement before and after each axis	Passed
Vibration and shock stress for rolling stock equipment	Passed

Downloaded from Arrow.com.

Commercial data

Product Group	33 (SMT Terminal)
PU (SPU)	6750 (750) pcs
Packaging type	Box
Country of origin	CH
GTIN	4055143888196
Customs tariff number	85369010000

Product Classification

UNSPSC	39121409
eCl@ss 10.0	27-14-11-06
eCl@ss 9.0	27-14-11-06
ETIM 9.0	EC001284
ETIM 10.0	EC001284
ECCN	NO US CLASSIFICATION

Environmental Product Compliance

RoHS Compliance Status	Compliant,No Exemption

Approvals / Certificates

General approvals

Approval	Standard	Certificate Name
CCA DEKRA Certification B.V.	EN 60998	NTR NL 7725/M1
CCA DEKRA Certification B.V.	EN 60838	NTR NL 2168246
CCA DEKRA Certification B.V.	EN 60947-7-4	NTR NL-7843/1
cURus Underwriters Laboratories Inc.	UL 1977	E45171
KEMA/KEUR DEKRA Certification B.V.	EN 60838	2168246.01
KEMA/KEUR DEKRA Certification B.V.	EN 60947	71-108183
KEMA/KEUR DEKRA Certification B.V.	EN 60998	71-109040
KEMA/KEUR DEKRA Certification B.V.	EN 60947-7-4	71-114208
UL Underwriters Laboratories Inc.	UL 1059	E45172

Declarations of conformity and manufacturer's declarations

Approval	Standard	Certificate Name
EU-Declaration of Conformity WAGO GmbH & Co. KG	-	-
Railway WAGO GmbH & Co. KG	-	Z00004396.000
UK-Declaration of Conformity WAGO GmbH & Co. KG	-	-

Downloaded from Arrow.com.

Downloads

Environmental Product Compliance

Compliance Search

Environmental Product Compliance
2060-453/998-404

Documentation

Additional Information

Technical Section	03.04.2019	pdf 2027.26 KB	

CAD/CAE-Data

CAD data

2D/3D Models
2060-453/998-404

CAE data

ZUKEN Portal
2060-453/998-404

PCB Design

Symbol and Footprint via SamacSys
2060-453/998-404

Symbol and Footprint via Ultra Librarian
2060-453/998-404

1 Compatible Products

1.1 Optional Accessories

1.1.1 Board-to-board link

1.1.1.1 Board-to-board link

Item No.: 2060-953/028-000
Board-to-Board Link; Pin spacing 4 mm; 3-pole; Length: 28 mm; white

1.1.2 Ferrule

1.1.2.1 Ferrule

Item No.: 216-301
Ferrule; Sleeve for 0.25 mm² / AWG 24; insulated; electro-tin plated; yellow

Item No.: 216-131
Ferrule; Sleeve for 0.25 mm² / AWG 24; uninsulated; electro-tin plated; silver-colored

Item No.: 216-302
Ferrule; Sleeve for 0.34 mm² / 22 AWG; insulated; electro-tin plated; light turquoise

Item No.: 216-132
Ferrule; Sleeve for 0.34 mm² / 22 AWG; uninsulated; electro-tin plated

Downloaded from Arrow.com.

1.1.3 Tool

1.1.3.1 Operating tool

Item No.: 206-860
Operating tool; for 2060 Series; multi-coloured

Item No.: 2060-189
Operating tool; made of insulating material; for 2060 Series; white

Installation Notes

Conductor termination

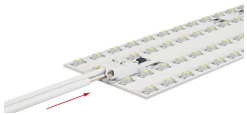

Insert solid conductors via push-in termination.

Conductor termination

Insert/remove fine-stranded conductors by lightly pressing on push-button, e.g., via optional operating tool (206-860).

Terminal blocks can be arranged side-by-side without loss of poles.

Downloaded from Arrow.com.