LPTC-V Series

Toroidal
Common Mode Chokes

The LPTC-V product Series are the continued expansion in the toroidal family of common mode chokes offered by Signal Transformer. These toroidal coils offer a wide variety of performance characteristics, designed around a UL94V-0 plastic cased ferrite core. All models are useful in various noise countermeasure applications such as power supplies, home appliances, IoT and AV equipment.

The LPTC-V Series of two-line common mode chokes are ideal for suppression of conductive EMI emissions as commonly found in many electronic circuit designs and offer a wide operating range of -55 °C to +125 °C. Custom versions are available upon request.

General Features

- Low DCR
- Wide range of inductance and current
- High impedance at low frequency
- Vertical design (no base)
- High temperature Operation
- Single layer wound coils
- Reach and RoHS compliant

Specifications

- 2 line common mode choke
- 0.51 to 25.5 mH Inductance range
- Current range 1 to 5 A
- Dielectric strength 3.75 kVrms
- Coil wound on UL94V-0 rated plastic cap
- Operating temperature -55°C to +125°C

Applications

- Power supplies
- Home appliances / IoT
- Audio-visual equipment

signal TRANSFORMER
a bel group

RoHS Compliant

REACH COMPLIANCE

belfuse.com/signal

Downloaded from Arrow.com.

Please read our datasheet & drawing disclaimer here.

DIMENSIONS & ELECTRICAL CHARACTERISTICS

Electrical specifications for all part numbers measured at 25°C unless otherwise stated. Dimensions are in mm.

Signal Part Number	Inductance (mH) @ 1 kHz	Current (A)	DCR (mΩ)	Max Diameter (A)	Max Width (B)	Max Height (C)	Leads Length (± 1) (D)	Lead Thickness (± 0.1) (E)	Max Tinning Height (F)
LPTC-V-0.51-1-40	0.51	1	40	18	13	17	12.7	0.4	1.5
LPTC-V-0.85-1-60	0.85	1	60	18	13	17	12.7	0.4	1.5
LPTC-V-1.7-1-70	1.70	1	70	18	13	17	12.7	0.4	1.5
LPTC-V-2.55-1-100	2.55	1	100	18	13	17	12.7	0.4	1.5
LPTC-V-4.25-1-150	4.25	1	150	18	13	17	12.7	0.4	1.5
LPTC-V-0.51-2-30	0.51	2	30	18	13	17	12.7	0.5	1.5
LPTC-V-0.85-2-40	0.85	2	40	18	13	17	12.7	0.5	1.5
LPTC-V-1.7-2-60	1.70	2	60	18	13	17	12.7	0.5	1.5
LPTC-V-2.55-2-75	2.55	2	75	18	13	17	12.7	0.5	1.5
LPTC-V-0.51-3-20	0.51	3	20	18	13	17	12. 7	0.65	1.5
LPTC-V-0.85-3-30	0.85	3	30	18	13	17	12. 7	0.65	1.5
LPTC-V-0.85-2-50	0.85	2	50	22	13	21	12.7	0.5	1.5
LPTC-V-1.7-2-75	1.70	2	75	22	13	21	12.7	0.5	1.5
LPTC-V-2.55-2-85	2.55	2	85	22	13	21	12.7	0.5	1.5
LPTC-V-4.25-2-110	4.25	2	110	22	13	21	12.7	0.5	1.5
LPTC-V-6.8-2-200	6.80	2	200	22	13	21	12.7	0.5	1.5
LPTC-V-0.85-5-35	0.85	5	35	22	13	21	12.7	0.8	1.5
LPTC-V-42.5-2-200	42.2	2	200	32	21	31	12.7	0.6	1.5
LPTC-V-4.25-4-46	4.25	4	46	32	21	31	12.7	0.7	1.5
LPTC-V-6.8-4-60	6.80	4	60	32	21	31	12.7	0.7	1.5
LPTC-V-25.5-4-130	25.5	4	130	32	21	31	12.7	0.7	1.5
LPTC-V-1.7-5-40	1.70	5	40	32	21	31	12.7	0.9	1.5
LPTC-V-9.35-5-72	9.35	5	72	32	21	31	12.7	0.9	1.5
LPTC-V-2.55-10-20	2.55	10	20	32	21	31	12.7	1.17	1.5

Custom versions available upon request.

signal TRANSFORMER a bel group

128 Atlantic Avenue, Lynbrook, NY 11563
Toll Free 866-239-5777 | Tel 516-239-5777 | Fax 516-239-7208
sales@signaltransformer.com | techhelp@signaltransformer.com
belfuse.com/signal

RoHS Compliant
REACH COMPLIANCE

© 2024 Signal Transformer

Downloaded from Arrow.com.

MECHANICAL SPECIFICATIONS

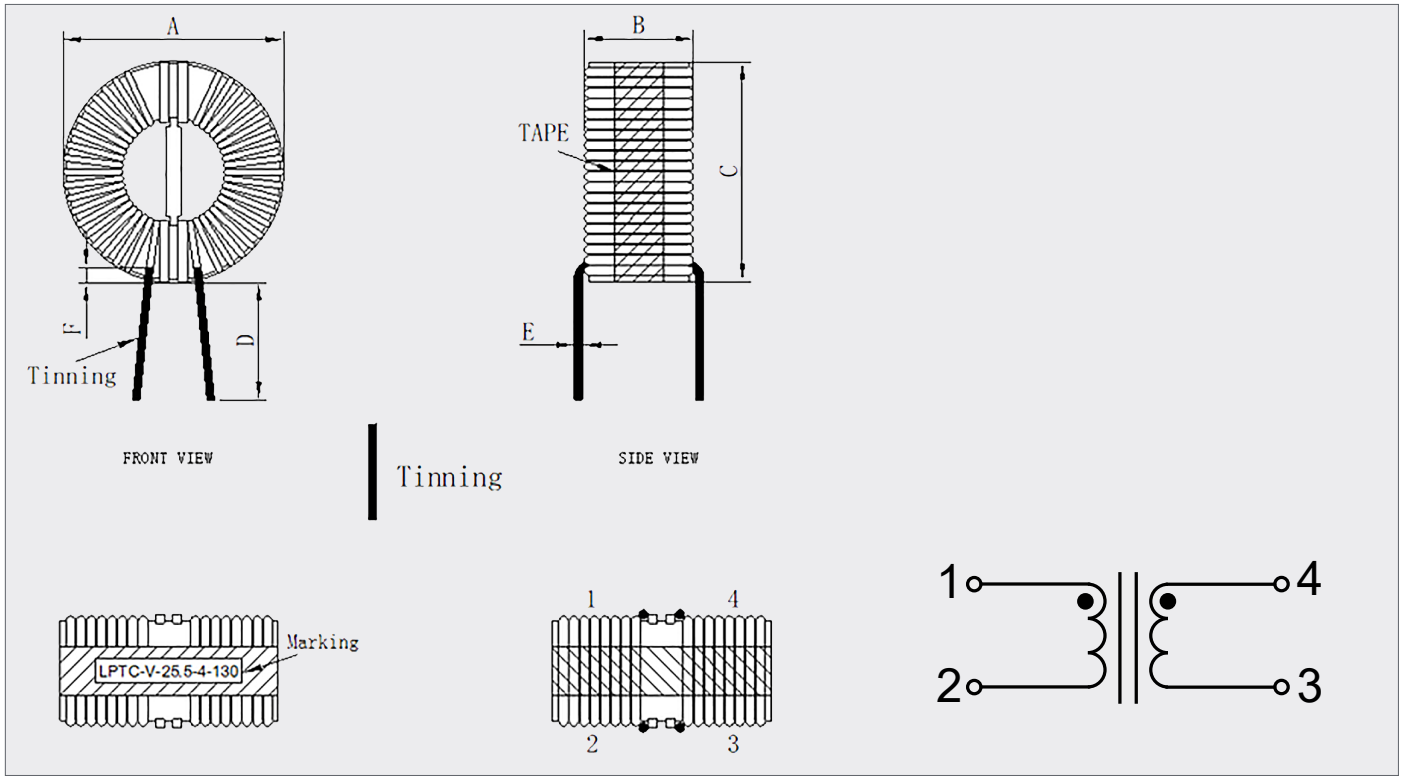

PRODUCT IDENTIFICATION

LPTC	-	V	-	4.25	-	1	-	150
(1)		(2)		(3)		(4)		(5)

(1) LPTC = Series
(2) V = Vertical mount
(3) 4.25 = Inductance value
(4) 1 = Current rating
(5) 150 = DCR, mΩ

Custom versions available upon request.

128 Atlantic Avenue, Lynbrook, NY 11563
Toll Free 866-239-5777 | Tel 516-239-5777 | Fax 516-239-7208
sales@signaltransformer.com | techhelp@signaltransformer.com
belfuse.com/signal

© 2024 Signal Transformer

Downloaded from Arrow.com.

PACKAGING INFORMATION

Signal Part Number	Qty per Plastic Tray	Pcs per Carton	Carton Dimensions (mm)	Total Carton Weight (lbs / kg)
LPTC-V-0.51-1-40	120	1560	350 x 350 x 250	19 / 9
LPTC-V-0.85-1-60				
LPTC-V-1.7-1-70				
LPTC-V-2.55-1-100				
LPTC-V-4.25-1-150				
LPTC-V-0.51-2-30				
LPTC-V-0.85-2-40				
LPTC-V-1.7-2-60				
LPTC-V-2.55-2-75				
LPTC-V-0.51-3-20				
LPTC-V-0.85-3-30				
LPTC-V-0.85-2-50	100	1300	350 x 350 x 250	29 / 13
LPTC-V-1.7-2-75				
LPTC-V-2.55-2-85				
LPTC-V-4.25-2-110				
LPTC-V-6.8-2-200				
LPTC-V-0.85-5-35				
LPTC-V-42.5-2-200	49	294	350 x 350 x 250	27 / 12
LPTC-V-4.25-4-46				
LPTC-V-6.8-4-60				
LPTC-V-25.5-4-130				
LPTC-V-1.7-5-40				
LPTC-V-9.35-5-72				
LPTC-V-2.55-10-20				

Custom versions available upon request.

128 Atlantic Avenue, Lynbrook, NY 11563
Toll Free 866-239-5777 | Tel 516-239-5777 | Fax 516-239-7208
sales@signaltransformer.com | techhelp@signaltransformer.com
belfuse.com/signal

© 2024 Signal Transformer

Downloaded from Arrow.com.

About Signal Transformer

Signal Transformer is known as the world's leader of wire wound magnetic solutions since 1959. With over 50 years of experience manufacturing transformers, chokes, inductors and custom or modified standard products. Signal offers not only the most comprehensive line of certified standard power conversion products, with our vast engineering, manufacturing and regulatory resources; Signal Transformer excels in the design and manufacturer of cost effective, specialized platforms.

For more information, please contact us:

128 Atlantic Avenue
Lynbrook, NY 11563

Toll Free +1 866-239-5777
Tel +1 516-239-5777
Fax +1 516-239-7208

sales@signaltransformer.com
techhelp@signaltransformer.com

signal TRANSFORMER
a bel group

belfuse.com/signal

© 2021 Signal Transformer Inc. Specifications subject to change without notice. LPTC-V Series Oct-17-2024

Downloaded from Arrow.com.