09225PB (旧3610PS)

92□X25L

AC Axial Fan



General Specifications

Motor Structure	Shaded Pole Induction Motor
Motor Protection	Impedance Protection
Insulation Resistance	Min 100MΩ by DC 500V Megger
Dielectric Withstand Voltage	: AC1800V 3s
Allowable Ambient Temperature Range	: − 10℃ ～ + 70℃ (Operating) − 40℃ ～ + 70℃ (Storage) non-condensing environment

Expected Life ※ Failure Rate: 10% (L10 Life)

25℃ 100,000 (Hours)

Outline

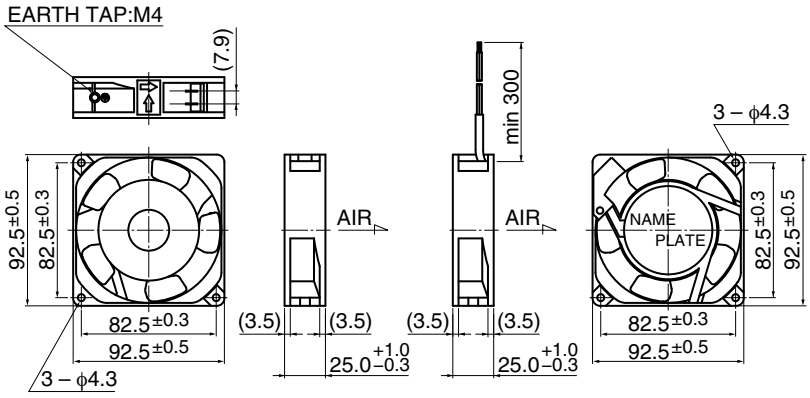

(0.5mm)

＊ Only flange type casing is available.

Panel Out-cuts

(Inlet Side) / Outlet Side)

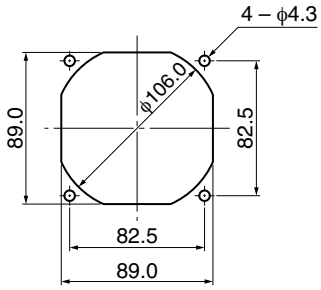

Characteristic Curves

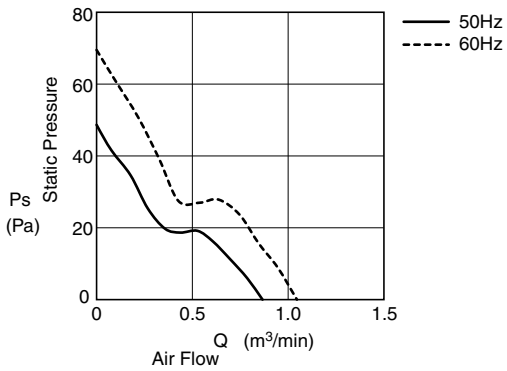

Material

Casing	: Aluminum (Black Painting)
Impeller	: Plastic (Black) UL94V-0
Bearing	: Ball Bearing
Terminal	: Faston #110 or Equiv

Lead Wire type is also available.

Lead Wire : UL3266, AWG22

AC FAN

Downloaded from Arrow.com.

Specifications

Model**	Product Number	Rating Voltage	Frequency	Starting Voltage	Current	Input Power	Speed	Max Air Flow		Max Static Pressure		Noise	Mass
		(V)	(Hz)	(V)	(A)*2	(W)*1	(min-1)*3	(m^3/min)*3	(CFM)*3	(Pa)*3	(In H2O)*3	(dB)*1	(g)
09225PB-A0L-EA-	00	100	50	65	0.190	13.0	2600	0.80	28.6	43.1	0.17	33.5	300
	00		60		0.150	10.0	3100	0.98	35.0	60.9	0.24	38.0	
09225PB-A1J-EA-	00	115	50	75	0.110	7.0	1450	0.46	16.2	13.8	0.06	21.0	
	00		60		0.090	6.0	1800	0.58	20.5	19.7	0.08	25.0	
09225PB-A1K-EA-	00		50		0.095	7.0	2100	0.60	21.2	29.4	0.12	30.0	
	00		60		0.090	6.0	2500	0.80	28.3	39.2	0.16	35.0	
09225PB-A1L-EA-	00		50		0.170	12.0	2600	0.80	28.6	43.1	0.17	33.5	
	00		60		0.130	9.0	3100	0.98	35.0	60.9	0.24	38.0	
09225PB-B0L-EA-	00	200	50	130	0.100	13.0	2600	0.80	28.6	43.1	0.17	33.5	
	00		60		0.080	10.0	3100	0.98	35.0	60.9	0.24	38.0	
09225PB-B2L-EA-	00	220	50	165	0.100	13.0	2600	0.80	28.6	43.1	0.17	33.5	
	00		60		0.080	10.0	3100	0.98	35.0	60.9	0.24	38.0	
09225PB-B3J-EA-	00	230	50	180	0.050	7.0	1450	0.46	16.2	13.8	0.06	21.0	
	00		60		0.040	6.0	1800	0.58	20.5	19.7	0.08	25.0	
09225PB-B3K-EA-	00		50		0.060	7.0	2100	0.60	21.2	29.4	0.12	30.0	
	00		60		0.060	6.0	2500	0.80	28.3	39.2	0.16	35.0	
09225PB-B3L-EA-	00		50	180	0.090	13.0	2600	0.80	28.6	43.1	0.17	33.5	
	00		60		0.070	10.0	3100	0.98	35.0	60.9	0.24	38.0	
09225PB-B4L-EA-	00	240	50	180	0.085	13.0	2600	0.80	28.6	43.1	0.17	33.5	
	00		60		0.065	10.0	3100	0.98	35.0	60.9	0.24	38.0	

Rotation: Counterclockwise as seen from the label side

Airflow Outlet: Label side

Terminal (-EA-) and lead wire (-AA-) version available

*1: Average Values in Free Air
*2: Maximum Values in Free Air
*3: Minimum Values in Free Air

Downloaded from Arrow.com.