TDB Series

Ultra-miniature Surface Mount Half-pitch DIP Switches

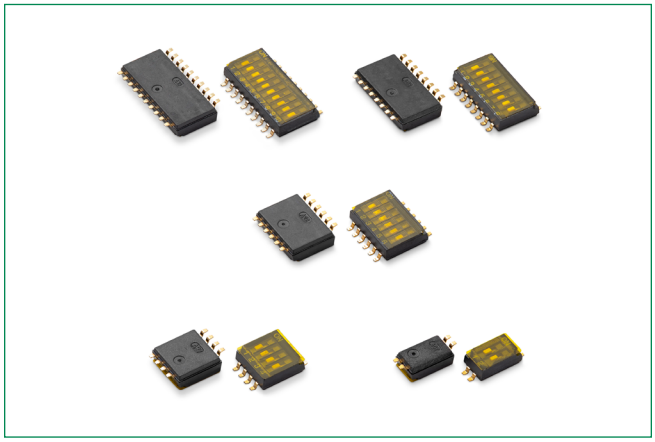

Description

The TDB series is an ultra-miniature, half-pitch surface-mount DIP switch (P = 1.27 mm), achieved by significantly reducing the size of its internal mechanism to enable high-density mounting. It is sealed with top tape to support washable processing. TDB Series comes as a sister solution to our TDA Series of DIP switches.

Features & Benefits

- Gold plated contacts
- Ultra miniature size enables high density mounting
- Top tape sealed to support washable processing
- RoHS compliant

Applications

- Industrial Control Equipment
- Power Supplies
- Security and Fire Systems
- IoT Devices
- Inverter systems

Specifications

Switch Function	SPST - 2, 4, 6 ,8 ,10 positions
Contact Rating	24 V DC, 25 mA (switching) 50 V DC, 100 mA (steady state)
Packaging	Tube Tape and Reel

Electrical & Mechanical Characteristics

Mechanical and Electrical Life	1,000 cycles
Contact Resistance	100 mΩ max.
Insulation Resistance	100M Ω @ 100 V DC min.
Dielectric Strength	300 V AC min.
Operating Force	4.9N max

Environmental Characteristics

Storage Temperature	-40˚C to 85˚C
Operating Temperature	
MSL	1

Materials

Case & Cover	PPS (UL 94 V-0)
Actuator	LCP (UL 94 V-0)
Contacts	Copper alloy with gold plate over nickel plate
Terminals	Copper alloy, with gold flash over nickel plate. All terminals are insert molded.
Tape Seal	Polyimide

Note: Specifications and materials listed above are for switches with standard options. For information on specific and custom switches, consult Customer Service Center. All switches supplied in "OFF" position.

Process

Soldering	IPC/JEDEC J-STD-020

© 2025 Littelfuse, Inc.
Specifications are subject to change without notice.
Revised: VL 12/17/25

Downloaded from Arrow.com.

TDB Series
Ultra-miniature Surface Mount Half-pitch DIP Switches

Ordering Number

Our easy build-a-switch concept allows you to mix and match options to create the switch you need. To order, select desired option from each category and and place it in the appropriate box. All switches supplied in "OFF" position.

TDBxx - H0 - x - B - 1 - x

Number of Positions
TDB02
TDB04
TDB06
TDB08
TDB10

Flush Actuator
H0

Termination
S: Gull wing

Packaging
None: Tubes
R: Tape and Reel

Sealing
1: Top tape seal

Contact Material
B: Gold

Dimensions (mm)

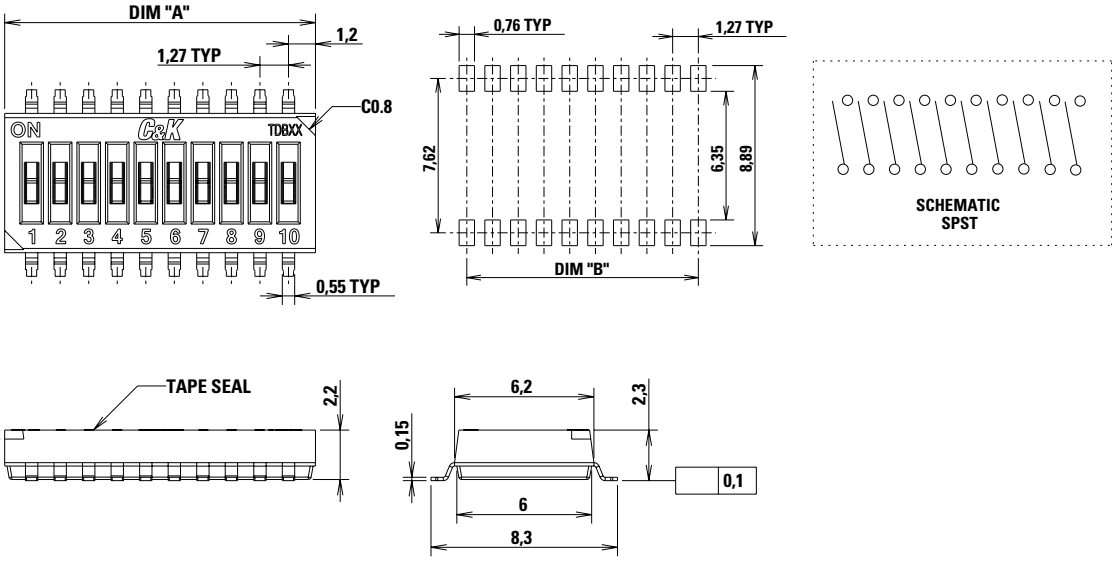

Series	No. Pos.	DIM 'A'	DIM "B"
TDB02	2	3.67	1.27
TDB04	4	6.21	3.81
TDB06	6	8.75	6.35
TDB08	8	11.29	8.89
TDB10	10	13.83	11.43

© 2025 Littelfuse, Inc.
Specifications are subject to change without notice.
Revised: VL 12/17/25

Downloaded from Arrow.com.

TDB Series
Ultra-miniature Surface Mount Half-pitch DIP Switches

Packaging

	Tube	Tape and reel
Quantity	TDB02 – 125pcs/tube, 12,500pcs/box TDB04 – 70pcs/tube, 7,000pcs/box TDB06 – 50pcs/tube, 5,000pcs/box TDB08 – 40pcs/tube, 4,000pcs/box TDB10 – 30pcs/tube, 3,000pcs/box	TDB02 – 2,000pcs/reel, 10,000pcs/box TDB04 – 2,000pcs/reel, 10,000pcs/box TDB06 – 2,000pcs/reel, 10,000pcs/box TDB08 – 2,000pcs/reel, 6,000pcs/box TDB10 – 2,000pcs/reel, 6,000pcs/box

Tape and Reel Dimensions (mm)

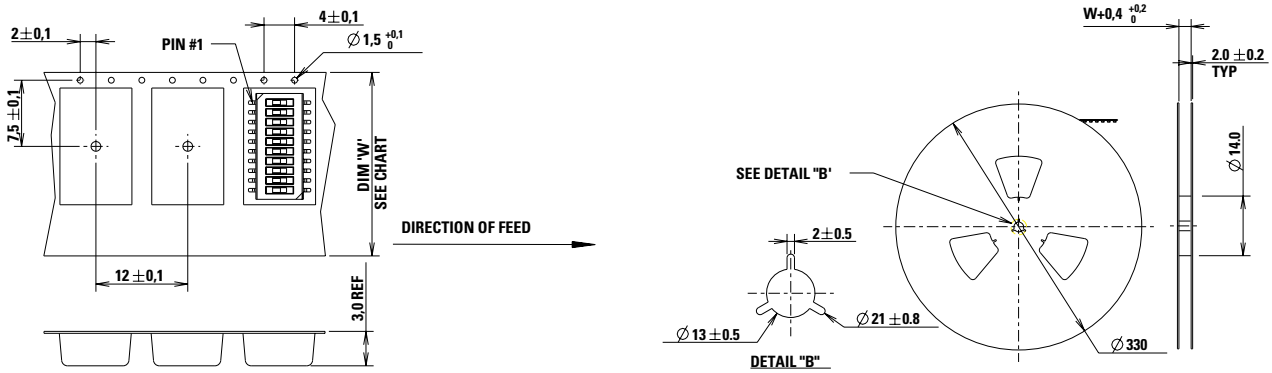

DIM Part #	DIM 'W'	Quantity / Reel
TDB02H0SB1R	16.0	2,000
TDB04H0SB1R		
TDB06H0SB1R		
TDB08H0SB1R	24.0	2,000
TDB10H0SB1R		

Orderable Part Numbers

Littelfuse orderable PN	Description	Number of positions	Packaging
G01821920	TDB02H0SB1R	2	Tape and reel
G01821919	TDB04H0SB1R	4	Tape and reel
G01821918	TDB06H0SB1R	6	Tape and reel
G01821917	TDB08H0SB1R	8	Tape and reel
G01821916	TDB10H0SB1R	10	Tape and reel
G01825572	TDB02H0SB1	2	Tube
G01825571	TDB04H0SB1	4	Tube
G01825570	TDB06H0SB1	6	Tube
G01825569	TDB08H0SB1	8	Tube
G01825568	TDB10H0SB1	10	Tube

Disclaimer Notice - Information furnished is believed to be accurate and reliable. However, users should independently evaluate the suitability of and test each product selected for their own applications. Littelfuse products are not designed for, and may not be used in, all applications. Read complete Disclaimer Notice at http://www.littelfuse.com/disclaimer-electronics.

© 2025 Littelfuse, Inc.
Specifications are subject to change without notice.
Revised: VL 12/17/25

Downloaded from Arrow.com.