THIS DRAWING IS UNPUBLISHED. RELEASED FOR PUBLICATION –,– .
© COPYRIGHT – TE Connectivity ALL RIGHTS RESERVED.

REVISIONS					
P	LTR	DESCRIPTION	DATE	DWN	APVD
	A	RELEASED	7–20–17	CT	EH

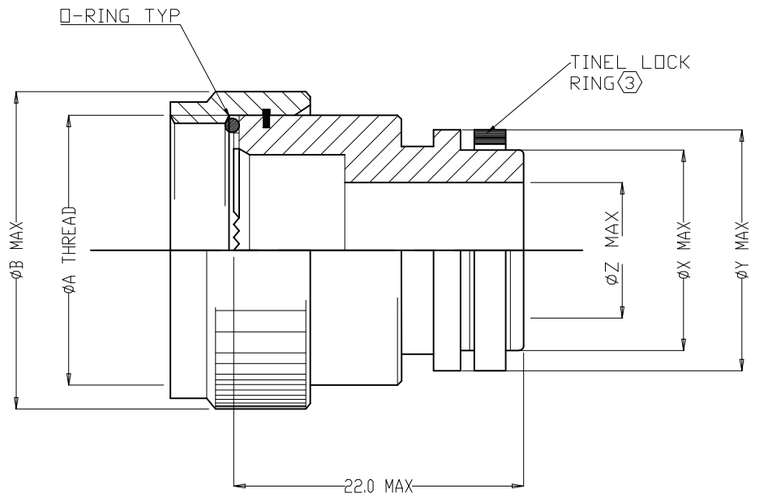

ORDER NUMBER	TINEL ENTRY SIZE	ØA THREAD RH CLASS 2B	ØB MAX	ØX	ØY +0.25 −0.25	ØZ +0.25 −0.50
08	03	0.4375″-28 UNEF	15.5	7.42–7.49	10.50	4.75
10	03	0.5625″-24 UNEF	18.5			
12	03	0.6875″-24 UNEF	22.0			

1. THIS PRODUCT IS DESIGNED TO TERMINATE A BRAIDED CABLE SHIELD AND A HEAT SHRINKABLE LIPPED BOOT TO A CONNECTOR.
2. FOR ALTERNATIVE MATERIALS OR FINISHES CONTACT TYCO ELECTRONICS
3. SEE DRAWING "TR" FOR DETAILS ON TINEL-LOCK RING. RINGS ARE DESIGNED TO BE HEATED ELECTRICALLY. ALL RINGS ARE MARKED WITH THERMOCHROMIC PAINT WHICH CHANGES COLOR WHEN INSTALLATION TEMPERATURE IS REACHED.
4. ADAPTOR TO BE BAGGED AND LABELED WITH CODE IDENTIFICATION NUMBER AND PART NUMBER (e.g 06090-200Z3580).
5. ADAPTOR MATESTO BENDIX. SJT COMMERCIAL SERIES CONNECTORS.

PART NUMBERING SYSTEM

200Z 3580-19 B

PREFIX

SEQUENTIAL NUMBER

MATERIAL

19 = ALUMINIUM ALLOY BS1474 6082-T6, BS4300/5 2011 OR QQ-A-225

FINISH

SEE S-CHOO-0157-002

THIS DRAWING IS A CONTROLLED DOCUMENT.

DIMENSIONS: INCHES

TOLERANCES UNLESS OTHERWISE SPECIFIED:
0 PLC ± –
1 PLC ± –
2 PLC ± 0.2
3 PLC ± 0.13
4 PLC ± –
ANGLES ± –

MATERIAL –

FINISH –

DWN	C.C.THOMAS 20JUL2017
CHK	E.HALEY 7–20–17
APVD	E.HALEY 7–20–17
PRODUCT SPEC	—
APPLICATION SPEC	—
WEIGHT	0

TE Connectivity

NAME: ADAPTER ASSY, STRAIGHT – –

SIZE	CAGE CODE	DRAWING NO	RESTRICTED TO
A3	06090	C-200Z3580T03600	—

CUSTOMER DRAWING | SCALE NTS | SHEET 1 OF 1 | REV A

Downloaded from Arrow.com.