REVISIONS					
REV	ECO	DESCRIPTION	DATE	BY	APPR
A1	--	RELEASED DRAWING	APR-05-2016	SULLEN	TOMMY
A2	--	UPDATE NOTES	JUN-20-2017	NICK	TOMMY
A3	--	UPDATE DRAWING	Mar-16-2018	White	Tommy

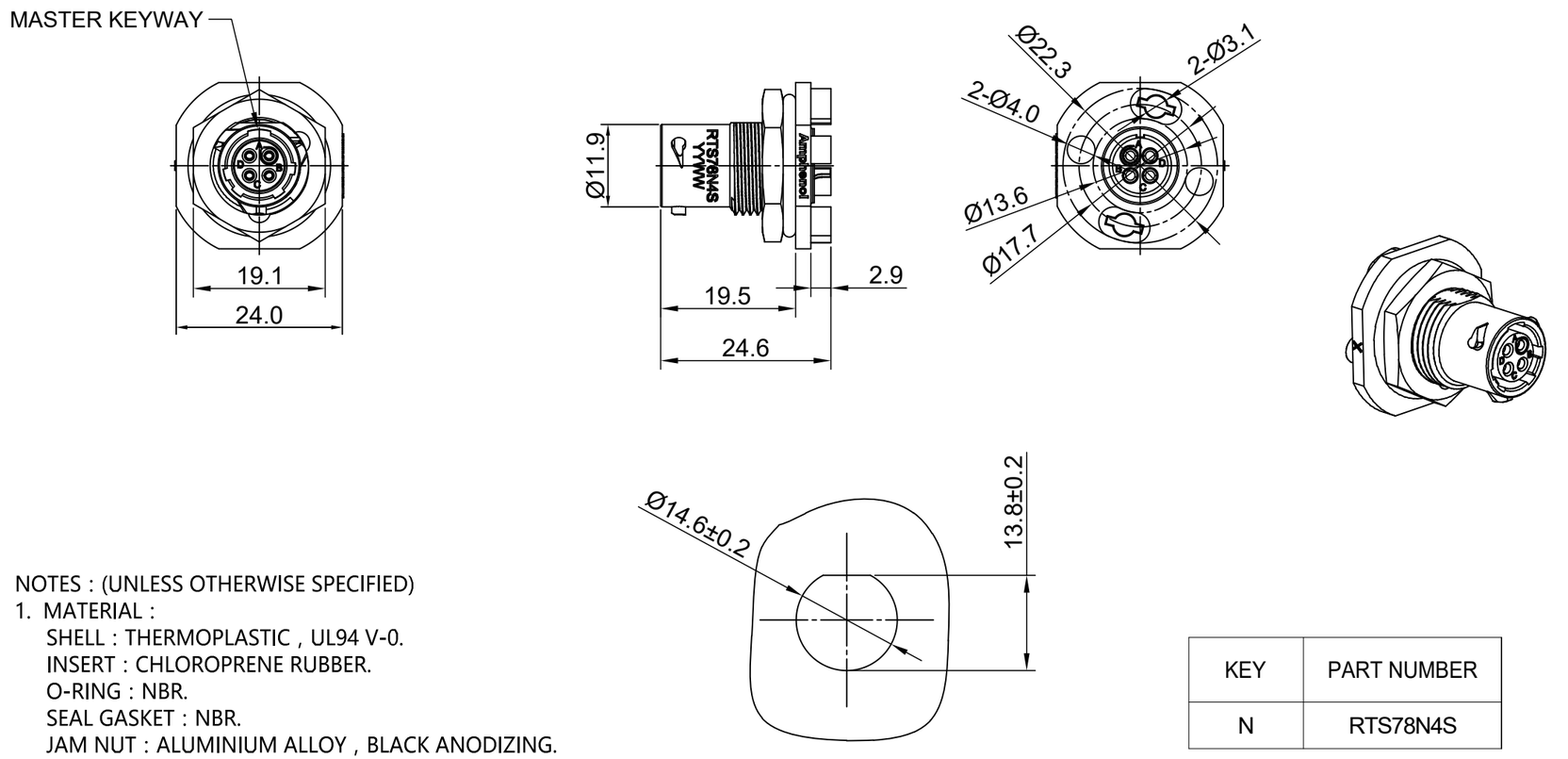

NOTES : (UNLESS OTHERWISE SPECIFIED)

1. MATERIAL :
   - SHELL : THERMOPLASTIC , UL94 V-0.
   - INSERT : CHLOROPRENE RUBBER.
   - O-RING : NBR.
   - SEAL GASKET : NBR.
   - JAM NUT : ALUMINIUM ALLOY , BLACK ANODIZING.
   - CONTACT : COPPER ALLOY , GOLD PLATED.
2. SPECIFICATIONS :
   - 2.1 RATED CURRENT : 7A (MAX).
   - 2.2 RATED VOLTAGE : 250V(AC/DC).
   - 2.3 OPERATING TEMPERATURE : -40°C ~ 105°C.
   - 2.4 DIELECTRIC WITHSTANDING VOLTAGE : LESS THAN 2 MILLIAMPS CURRENT LEAKAGE@1500 VOLTS AC.
   - 2.5 INSULATION RESISTANCE : 5000 MEGOHMS MIN.
   - 2.6 IP--CLASS : IP67 AND IP69K IN THE MATED CONDITION, PANEL EXTERNAL.
   - 2.7 MATING CYCLES DURABILITY : 500 CYCLES MIN.
   - 2.8 RoHS COMPLIANT.
3. ALL DIMENSIONS ARE FOR REFERENCE USE ONLY.

PANEL CUT OUT REFERENCE
PANEL THICKNESS : 3.2MM MAX.

KEY	PART NUMBER
N	RTS78N4S

QUANTITY	PART NUMBER	DESCRIPTION	ITEM

MATERIALS LIST

UNLESS OTHERWISE SPECIFIED
1) All dimensions are in metric(mm).
2) Tolerances are as follows:
1 PL DEC ±0.30
2 PL DEC ±0.15
3 PL DEC ±0.08
Fractions ±1/64
Angles ±1°
3) Note reference = X

MATERIAL SPECIFICATIONS:

PROCESS SPECIFICATIONS:

NEXT ASS'Y:

SIGNATURES		DATE
DRAWN:	White	Mar-16-2018
CHECKED:	Tod	Mar-16-2018
ENGINEER:		
APPROVAL:	Tommy	Mar-16-2018
CUSTOMER:		

THIS DRAWING IS SUPPLIED FOR INFORMATION ONLY. DESIGN FEATURES, SPECIFICATIONS AND PERFORMANCE DATA SHOWN HEREON ARE THE PROPERTY OF THE AMPHENOL CORPORATION. NO RIGHTS OF REPRODUCTION ARE IMPLIED. ALL DIMENSIONS ARE SUBJECT TO NORMAL MANUFACTURING VARIATIONS.

Amphenol
Sine Systems - www.amphenol-sine.com
44724 Morley Drive
Clinton Township, MI 48036

ECO-MATE,RECEPTACLE, JAM NUT, SIZE 8,4POS,SOCKET

SIZE	TYPE	DWG NO:	REVISION
B	C-	RTS78*4S	A3

SCALE: NONE SHEET 1 OF 1

TITLE: ECO-MATE,RECEPTACLE,JAM NUT,SIZE 8,4POS,SOCKET
DWG NO: RTS78*4S
REV: A3
SH: 1
OF: 1

Downloaded from Arrow.com.