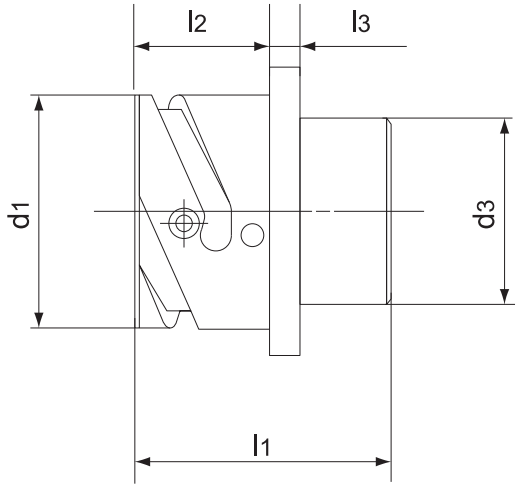

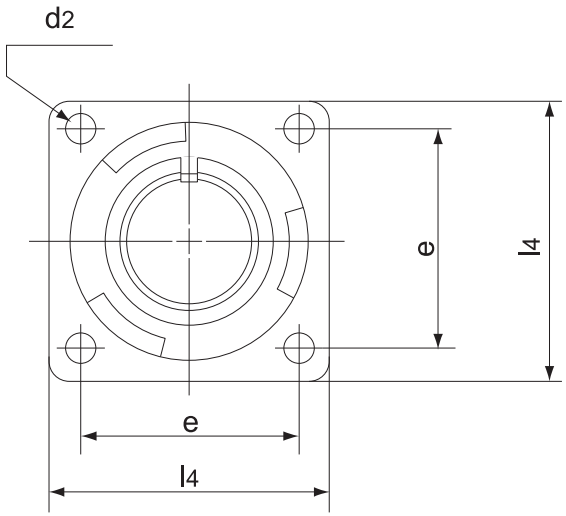

NO.	MASSE / DIM
D1 (+0 -0.15)	34.2
D2 (H13)	3.2
D3 (MAX)	29
E (±0.1)	29.4
L1 (MAX)	34.1
L2 (+0.4 -0)	19
L3 (±0.2)	4
L4 (±0.3)	38

NO	NOTE
1	SPECIFICATION AND DIMENSIONS ARE SUBJECT TO CHANGE
2	DRAWING ILLUSTRATE NORMAL INSULATOR POSITIONING

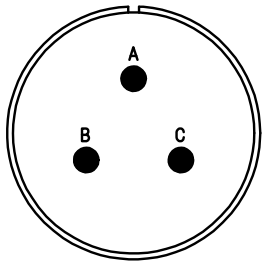

Material Specification:	
Shell Material:	Aluminium alloy
Shell Plating:	Chromate over Cadmium, olive drab
Insulator Material:	Chloroprene rubber
Contact Material:	Copper alloy
Contact Plating:	Silver

all dimensions are in mm
Dimensions without tolerance indications are general tolerances in acc. withISO2768-fH

drawing for
CUSTOMER

ITT
Engineered for life
ITT Cannon Veam ItalyS.r.L.
20020 Lainate(MI),Italy

description CIR02R-20-3S-F80
Front mounting receptacle through mounting holes
no endbell
Crimp for AWG wire (used in F80 insert) / Socket / Layout: 20-3

© All rights reserved, Reproduction or issue to third in any form whatever is only permitted with written authorization of ITT Cannon

page 1/1

revision 3616 18. Oct 19

Downloaded from Arrow.com.