ESP32-WROOM-32E
ESP32-WROOM-32UE

Datasheet Version 2.0

2.4 GHz Wi-Fi + Bluetooth® + Bluetooth LE module
Built around ESP32 series of SoCs, Xtensa® dual-core 32-bit LX6 microprocessor
4/8/16 MB flash available
26 GPIOs, rich set of peripherals
On-board PCB antenna or external antenna connector

ESP32-WROOM-32E

ESP32-WROOM-32UE

ESPRESSIF

www.espressif.com

Downloaded from Arrow.com.

1 Module Overview

Note:

Check the link or the QR code to make sure that you use the latest version of this document:
https://espressif.com/documentation/esp32-wroom-32e_esp32-wroom-32ue_datasheet_en.pdf

1.1 Features

CPU and On-Chip Memory

- ESP32-D0WD-V3 or ESP32-D0WDR2-V3 embedded, Xtensa dual-core 32-bit LX6 microprocessor, up to 240 MHz
- 448 KB ROM
- 520 KB SRAM
- 16 KB SRAM in RTC

Wi-Fi

- 802.11b/g/n
- Bit rate: 802.11n up to 150 Mbps
- A-MPDU and A-MSDU aggregation
- 0.4 μs guard interval support
- Center frequency range of operating channel: 2412 ~ 2484 MHz

Bluetooth®

- Bluetooth V4.2 BR/EDR and Bluetooth LE specification
- Class-1, class-2 and class-3 transmitter
- AFH
- CVSD and SBC

Peripherals

- Up to 26 GPIOs
  - 5 strapping GPIOs
- SD card, UART, SPI, SDIO, I2C, LED PWM, Motor PWM, I2S, IR, pulse counter, GPIO, capacitive touch sensor, ADC, DAC, TWAI® (compatible with ISO 11898-1, i.e. CAN Specification 2.0)

Integrated Components on Module

- 40 MHz crystal oscillator
- 4/8/16 MB SPI flash
- ESP32-D0WDR2-V3 also provides 2 MB PSRAM

Antenna Options

- ESP32-WROOM-32E: On-board PCB antenna
- ESP32-WROOM-32UE: external antenna via a connector

Operating Conditions

- Operating voltage/Power supply: 3.0 ~ 3.6 V
- Operating ambient temperature:
  - 85 °C version: −40 ~ 85 °C
  - 105 °C version: −40 ~ 105 °C. Note that only the modules embedded with a 4/8 MB flash support this version.

Certification

- Bluetooth certification: BQB
- RF certification: See certificates for ESP32-WROOM-32E and ESP32-WROOM-32UE
- Green certification: REACH/RoHS

Test

- HTOL/HTSL/uHAST/TCT/ESD

Downloaded from Arrow.com.

1.2 Series Comparison

ESP32-WROOM-32E and ESP32-WROOM-32UE are two powerful, generic Wi-Fi MCU modules that have a rich set of peripherals. They are an ideal choice for a wide variety of application scenarios related to Internet of Things (IoT), such as embedded systems, smart home, wearable electronics, etc.

ESP32-WROOM-32E comes with a PCB antenna, and ESP32-WROOM-32UE with a connector for an external antenna. **The information in this datasheet is applicable to both modules.**

The Series Comparison for the two modules is as follows:

Table 1: ESP32-WROOM-32E Series Comparison[1]

Ordering Code	Flash[2]	PSRAM	Ambient Temp.[3] (°C)	Size[4] (mm)
ESP32-WROOM-32E-N4	4 MB (Quad SPI)	—	−40 ~ 85	18.0 × 25.5 × 3.1
ESP32-WROOM-32E-N8	8 MB (Quad SPI)	—	−40 ~ 85	
ESP32-WROOM-32E-N16	16 MB (Quad SPI)	—	−40 ~ 85	
ESP32-WROOM-32E-H4	4 MB (Quad SPI)	—	−40 ~ 105	
ESP32-WROOM-32E-H8	8 MB (Quad SPI)	—	−40 ~ 105	
ESP32-WROOM-32E-N4R2	4 MB (Quad SPI)	2 MB (Quad SPI)[5]	−40 ~ 85	
ESP32-WROOM-32E-N8R2	8 MB (Quad SPI)	2 MB (Quad SPI)[5]	−40 ~ 85	
ESP32-WROOM-32E-N16R2	16 MB (Quad SPI)	2 MB (Quad SPI)[5]	−40 ~ 85	

[1] This table shares the same notes presented in the table 2 below.

Table 2: ESP32-WROOM-32UE Series Comparison

Ordering Code	Flash[2]	PSRAM	Ambient Temp.[3] (°C)	Size[4] (mm)
ESP32-WROOM-32UE-N4	4 MB (Quad SPI)	—	−40 ~ 85	18.0 × 19.2 × 3.2
ESP32-WROOM-32UE-N8	8 MB (Quad SPI)	—	−40 ~ 85	
ESP32-WROOM-32UE-N16	16 MB (Quad SPI)	—	−40 ~ 85	
ESP32-WROOM-32UE-H4	4 MB (Quad SPI)	—	−40 ~ 105	
ESP32-WROOM-32UE-H8	8 MB (Quad SPI)	—	−40 ~ 105	
ESP32-WROOM-32UE-N4R2	4 MB (Quad SPI)	2 MB (Quad SPI)[5]	−40 ~ 85	
ESP32-WROOM-32UE-N8R2	8 MB (Quad SPI)	2 MB (Quad SPI)[5]	−40 ~ 85	
ESP32-WROOM-32UE-N16R2	16 MB (Quad SPI)	2 MB (Quad SPI)[5]	−40 ~ 85	

[2] For specifications, refer to Section 6.5 *Memory Specifications*.

[3] Ambient temperature specifies the recommended temperature range of the environment immediately outside the Espressif module.

[4] For details, refer to Section 10.1 *Module Dimensions*.

[5] This module uses PSRAM integrated in the chip's package.

At the core of the module is the ESP32-D0WD-V3 chip or ESP32-D0WDR2-V3 chip. The chip embedded is designed to be scalable and adaptive. There are two CPU cores that can be individually controlled, and the CPU clock frequency is adjustable from 80 MHz to 240 MHz. You can power off the CPU and make use of the low-power coprocessor to constantly monitor the peripherals for changes or crossing of thresholds.

Downloaded from Arrow.com.

Note:

- For more information on ESP32-D0WD-V3 and ESP32-D0WDR2-V3 chip, please refer to *ESP32 Series Datasheet*.
- For chip revision identification, ESP-IDF release that supports a specific chip revision, and other information on chip revisions, please refer to *ESP32 Series SoC Errata* > Section *Chip Revision*.

1.3 Applications

- Smart Home
- Industrial Automation
- Health Care
- Consumer Electronics
- Smart Agriculture
- POS Machines
- Service Robot
- Audio Devices
- Generic Low-power IoT Sensor Hubs
- Generic Low-power IoT Data Loggers
- Cameras for Video Streaming
- Speech Recognition
- Image Recognition
- SDIO Wi-Fi + Bluetooth Networking Card

Downloaded from Arrow.com.

Contents

1 Module Overview 2
1.1 Features 2
1.2 Series Comparison 3
1.3 Applications 4

2 Block Diagram 9

3 Pin Definitions 10
3.1 Pin Layout 10
3.2 Pin Description 11

4 Boot Configurations 13
4.1 Chip Boot Mode Control 14
4.2 Internal LDO (VDD_SDIO) Voltage Control 15
4.3 U0TXD Printing Control 16
4.4 Timing Control of SDIO Slave 16
4.5 JTAG Signal Source Control 16
4.6 Chip Power-up and Reset 16

5 Peripherals 18
5.1 Peripheral Overview 18
5.2 Digital Peripherals 18
5.2.1 General Purpose Input / Output Interface (GPIO) 18
5.2.2 Serial Peripheral Interface (SPI) 18
5.2.3 Universal Asynchronous Receiver Transmitter (UART) 19
5.2.4 I2C Interface 19
5.2.5 I2S Interface 20
5.2.6 Remote Control Peripheral 20
5.2.7 Pulse Counter Controller (PCNT) 21
5.2.8 LED PWM Controller 21
5.2.9 Motor Control PWM 22
5.2.10 SD/SDIO/MMC Host Controller 23
5.2.11 SDIO/SPI Slave Controller 23
5.2.12 TWAI® Controller 24
5.2.13 Ethernet MAC Interface 24
5.3 Analog Peripherals 25
5.3.1 Analog-to-Digital Converter (ADC) 25
5.3.2 Digital-to-Analog Converter (DAC) 26
5.3.3 Touch Sensor 26

6 Electrical Characteristics 28
6.1 Absolute Maximum Ratings 28
6.2 Recommended Operating Conditions 28

Downloaded from Arrow.com.

6.3 DC Characteristics (3.3 V, 25 °C) 28
6.4 Current Consumption Characteristics 29
6.5 Memory Specifications 30

7 RF Characteristics 31
7.1 Wi-Fi Radio 31
7.1.1 Wi-Fi RF Transmitter (TX) Characteristics 31
7.1.2 Wi-Fi RF Receiver (RX) Characteristics 31
7.2 Bluetooth Radio 33
7.2.1 Receiver – Basic Data Rate 33
7.2.2 Transmitter – Basic Data Rate 33
7.2.3 Receiver – Enhanced Data Rate 34
7.2.4 Transmitter – Enhanced Data Rate 35
7.3 Bluetooth LE Radio 35
7.3.1 Receiver 35
7.3.2 Transmitter 36

8 Module Schematics 37

9 Peripheral Schematics 39

10 Physical Dimensions 40
10.1 Module Dimensions 40
10.2 Dimensions of External Antenna Connector 41

11 PCB Layout Recommendations 43
11.1 PCB Land Pattern 43
11.2 Module Placement for PCB Design 45

12 Product Handling 46
12.1 Storage Conditions 46
12.2 Electrostatic Discharge (ESD) 46
12.3 Reflow Profile 46
12.4 Ultrasonic Vibration 47

Datasheet Versioning 48

Related Documentation and Resources 49

Revision History 50

Downloaded from Arrow.com.

List of Tables

1	ESP32-WROOM-32E Series Comparison[1]	3
2	ESP32-WROOM-32UE Series Comparison	3
3	Pin Definitions	11
4	Default Configuration of Strapping Pins	13
5	Description of Timing Parameters for the Strapping Pins	14
6	Chip Boot Mode Control	14
7	U0TXD Printing Control	16
8	Timing Control of SDIO Slave	16
9	Description of Timing Parameters for Power-up and Reset	17
10	ADC Characteristics	25
11	ADC Calibration Results	26
12	Capacitive-Sensing GPIOs Available on ESP32	26
13	Absolute Maximum Ratings	28
14	Recommended Operating Conditions	28
15	DC Characteristics (3.3 V, 25 °C)	28
16	Current Consumption Depending on RF Modes	29
17	Flash Specifications	30
18	PSRAM Specifications	30
19	Wi-Fi RF Characteristics	31
20	TX Power with Spectral Mask and EVM Meeting 802.11 Standards	31
21	RX Sensitivity	31
22	Maximum RX Level	32
23	RX Adjacent Channel Rejection	33
24	Bluetooth LE RF Characteristics	33
25	Receiver Characteristics – Basic Data Rate	33
26	Transmitter Characteristics – Basic Data Rate	34
27	Receiver Characteristics – Enhanced Data Rate	34
28	Transmitter Characteristics – Enhanced Data Rate	35
29	Receiver Characteristics – Bluetooth LE	35
30	Transmitter Characteristics – Bluetooth LE	36

Downloaded from Arrow.com.

List of Figures

1 ESP32-WROOM-32E Block Diagram 9
2 ESP32-WROOM-32UE Block Diagram 9
3 Pin Layout (Top View) 10
4 Visualization of Timing Parameters for the Strapping Pins 14
5 Chip Boot Flow 15
6 Visualization of Timing Parameters for Power-up and Reset 16
7 ESP32-WROOM-32E Schematics 37
8 ESP32-WROOM-32UE Schematics 38
9 Peripheral Schematics 39
10 ESP32-WROOM-32E Physical Dimensions 40
11 ESP32-WROOM-32UE Physical Dimensions 40
12 Dimensions of External Antenna Connector 41
13 ESP32-WROOM-32E Recommended PCB Land Pattern 43
14 ESP32-WROOM-32UE Recommended PCB Land Pattern 44
15 Reflow Profile 46

Downloaded from Arrow.com.

2 Block Diagram

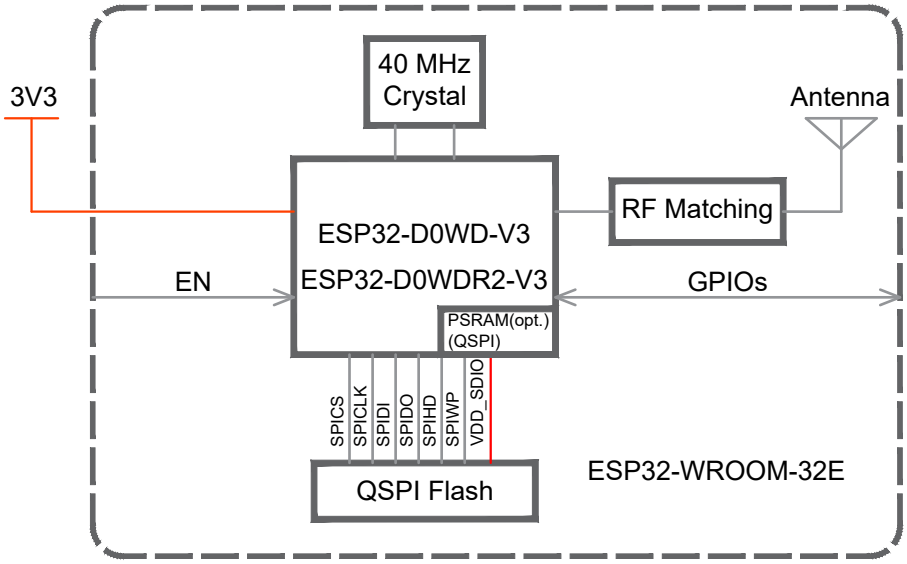

Figure 1: ESP32-WROOM-32E Block Diagram

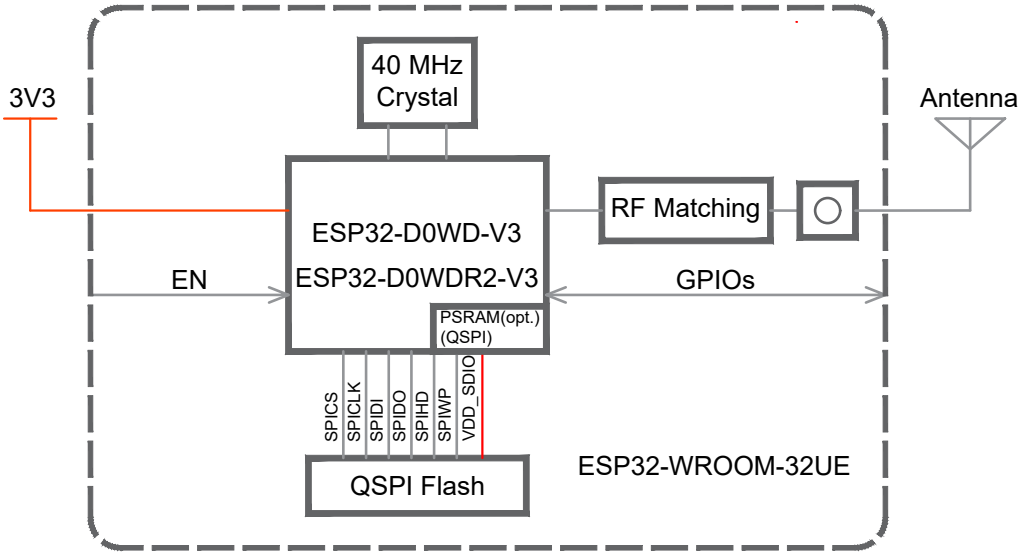

Figure 2: ESP32-WROOM-32UE Block Diagram

Note:
For the pin mapping between the chip and the in-package flash/PSRAM, please refer to *ESP32 Series Datasheet* > Table *Pin Mapping Between Chip and In-package Flash/PSRAM*.

Downloaded from Arrow.com.

3 Pin Definitions

3.1 Pin Layout

The pin diagram below shows the approximate location of pins on the module. For the actual diagram drawn to scale, please refer to Figure 10.1 *Module Dimensions*.

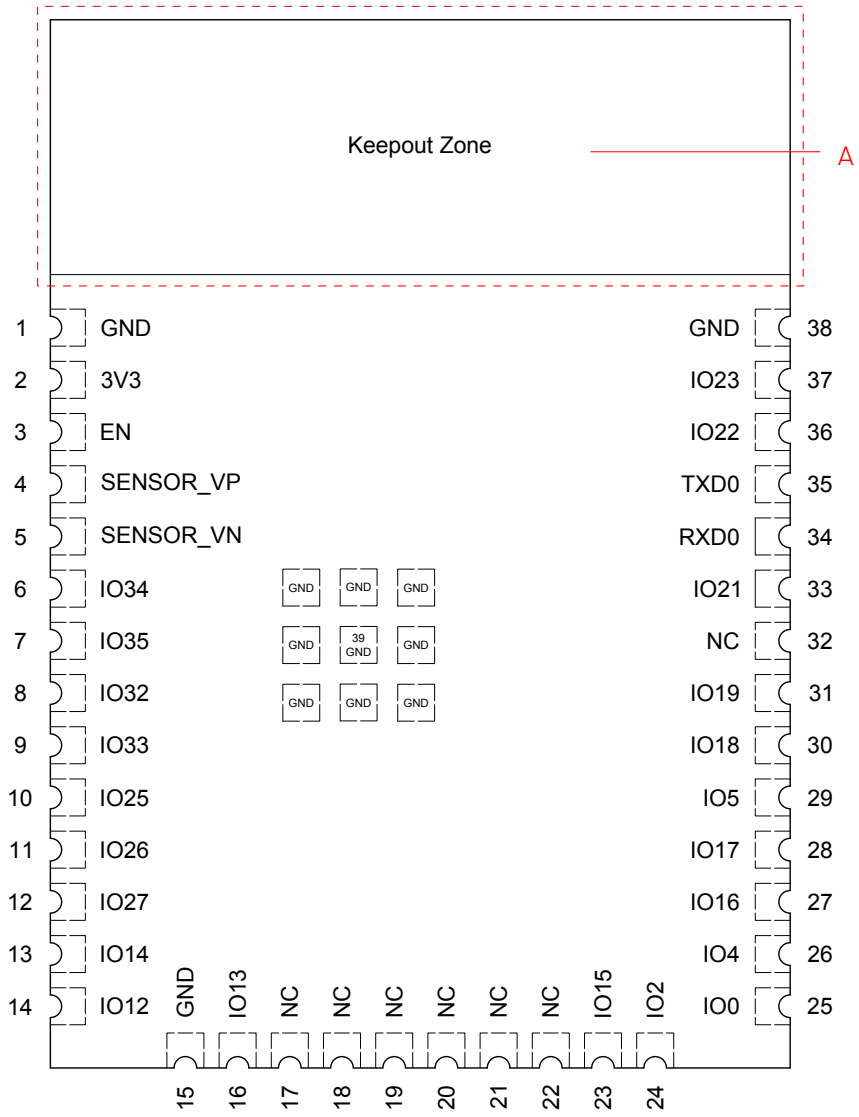

Figure 3: Pin Layout (Top View)

Note A:

- The zone marked with dotted lines is the antenna keepout zone. The pin layout of ESP32-WROOM-32UE is the same as that of ESP32-WROOM-32E, except that ESP32-WROOM-32UE has no keepout zone.
- To learn more about the keepout zone for module's antenna on the base board, please refer to *ESP32 Hardware Design Guidelines* > Section *Positioning a Module on a Base Board*.

Downloaded from Arrow.com.

3.2 Pin Description

The module has 38 pins. See pin definitions in Table 3 *Pin Description*.

For peripheral pin configurations, please refer to Section 5.2 *Digital Peripherals*.

Table 3: Pin Definitions

Name	No.	Type[1]	Function
GND	1	P	Ground
3V3	2	P	Power supply
EN	3	I	High: On; enables the chip Low: Off; the chip shuts down Note: Do not leave the pin floating.
SENSOR_VP	4	I	GPIO36, ADC1_CH0, RTC_GPIO0
SENSOR_VN	5	I	GPIO39, ADC1_CH3, RTC_GPIO3
IO34	6	I	GPIO34, ADC1_CH6, RTC_GPIO4
IO35	7	I	GPIO35, ADC1_CH7, RTC_GPIO5
IO32	8	I/O	GPIO32, XTAL_32K_P (32.768 kHz crystal oscillator input), ADC1_CH4, TOUCH9, RTC_GPIO9
IO33	9	I/O	GPIO33, XTAL_32K_N (32.768 kHz crystal oscillator output), ADC1_CH5, TOUCH8, RTC_GPIO8
IO25	10	I/O	GPIO25, DAC_1, ADC2_CH8, RTC_GPIO6, EMAC_RXD0
IO26	11	I/O	GPIO26, DAC_2, ADC2_CH9, RTC_GPIO7, EMAC_RXD1
IO27	12	I/O	GPIO27, ADC2_CH7, TOUCH7, RTC_GPIO17, EMAC_RX_DV
IO14	13	I/O	GPIO14, ADC2_CH6, TOUCH6, RTC_GPIO16, MTMS, HSPICLK, HS2_CLK, SD_CLK, EMAC_TXD2
IO12	14	I/O	GPIO12, ADC2_CH5, TOUCH5, RTC_GPIO15, MTDI, HSPIQ, HS2_DATA2, SD_DATA2, EMAC_TXD3
GND	15	P	Ground
IO13	16	I/O	GPIO13, ADC2_CH4, TOUCH4, RTC_GPIO14, MTCK, HSPID, HS2_DATA3, SD_DATA3, EMAC_RX_ER
NC	17	-	See note [2]
NC	18	-	See note [2]
NC	19	-	See note [2]
NC	20	-	See note [2]
NC	21	-	See note [2]
NC	22	-	See note [2]
IO15	23	I/O	GPIO15, ADC2_CH3, TOUCH3, MTDO, HSPICS0, RTC_GPIO13, HS2_CMD, SD_CMD, EMAC_RXD3
IO2	24	I/O	GPIO2, ADC2_CH2, TOUCH2, RTC_GPIO12, HSPIWP, HS2_DATA0, SD_DATA0
IO0	25	I/O	GPIO0, ADC2_CH1, TOUCH1, RTC_GPIO11, CLK_OUT1, EMAC_TX_CLK
IO4	26	I/O	GPIO4, ADC2_CH0, TOUCH0, RTC_GPIO10, HSPIHD, HS2_DATA1, SD_DATA1, EMAC_TX_ER
IO16[3]	27	I/O	GPIO16, HS1_DATA4, U2RXD, EMAC_CLK_OUT

Cont'd on next page

Downloaded from Arrow.com.

Table 3 – cont'd from previous page

Name	No.	Type[1]	Function
IO17	28	I/O	GPIO17, HS1_DATA5, U2TXD, EMAC_CLK_OUT_180
IO5	29	I/O	GPIO5, VSPICS0, HS1_DATA6, EMAC_RX_CLK
IO18	30	I/O	GPIO18, VSPICLK, HS1_DATA7
IO19	31	I/O	GPIO19, VSPIQ, U0CTS, EMAC_TXD0
NC	32	-	-
IO21	33	I/O	GPIO21, VSPIHD, EMAC_TX_EN
RXD0	34	I/O	GPIO3, U0RXD, CLK_OUT2
TXD0	35	I/O	GPIO1, U0TXD, CLK_OUT3, EMAC_RXD2
IO22	36	I/O	GPIO22, VSPIWP, U0RTS, EMAC_TXD1
IO23	37	I/O	GPIO23, VSPID, HS1_STROBE
GND	38	P	Ground

[1] P: power supply; I: input; O: output.

[2] Pins GPIO6 to GPIO11 on the ESP32-D0WD-V3/ESP32-D0WDR2-V3 chip are connected to the SPI flash integrated on the module and are not led out.

[3] In module variants that have embedded QSPI PSRAM, i.e., that embed ESP32-D0WDR2-V3, IO16 is connected to the embedded PSRAM and can not be used for other functions.

Downloaded from Arrow.com.

4 Boot Configurations

Note:
The content below is excerpted from *ESP32 Series Datasheet* > Section *Boot Configurations*. For the strapping pin mapping between the chip and modules, please refer to Chapter *8 Module Schematics*.

The chip allows for configuring the following boot parameters through strapping pins and eFuse bits at power-up or a hardware reset, without microcontroller interaction.

- **Chip boot mode**
  - Strapping pin: GPIO0 and GPIO2
- **Internal LDO (VDD_SDIO) Voltage**
  - Strapping pin: MTDI
  - eFuse bit: EFUSE_SDIO_FORCE and EFUSE_SDIO_TIEH
- **U0TXD printing**
  - Strapping pin: MTDO
- **Timing of SDIO Slave**
  - Strapping pin: MTDO and GPIO5
- **JTAG signal source**
  - eFuse bit: EFUSE_DISABLE_JTAG

The default values of all the above eFuse bits are 0, which means that they are not burnt. Given that eFuse is one-time programmable, once an eFuse bit is programmed to 1, it can never be reverted to 0. For how to program eFuse bits, please refer to *ESP32 Technical Reference Manual* > Chapter *eFuse Controller*.

The default values of the strapping pins, namely the logic levels, are determined by pins' internal weak pull-up/pull-down resistors at reset if the pins are not connected to any circuit, or connected to an external high-impedance circuit.

Table 4: Default Configuration of Strapping Pins

Strapping Pin	Default Configuration	Bit Value
GPIO0	Pull-up	1
GPIO2	Pull-down	0
MTDI	Pull-down	0
MTDO	Pull-up	1
GPIO5	Pull-up	1

To change the bit values, the strapping pins should be connected to external pull-down/pull-up resistances. If the ESP32 is used as a device by a host MCU, the strapping pin voltage levels can also be controlled by the host MCU.

All strapping pins have latches. At system reset, the latches sample the bit values of their respective strapping pins and store them until the chip is powered down or shut down. The states of latches cannot be changed in

Downloaded from Arrow.com.

any other way. It makes the strapping pin values available during the entire chip operation, and the pins are freed up to be used as regular IO pins after reset.

The timing of signals connected to the strapping pins should adhere to the *setup time* and *hold time* specifications in Table 5 and Figure 4.

Table 5: Description of Timing Parameters for the Strapping Pins

Parameter	Description	Min (ms)
t_{SU}	*Setup time* is the time reserved for the power rails to stabilize before the CHIP_PU pin is pulled high to activate the chip.	0
t_H	*Hold time* is the time reserved for the chip to read the strapping pin values after CHIP_PU is already high and before these pins start operating as regular IO pins.	1

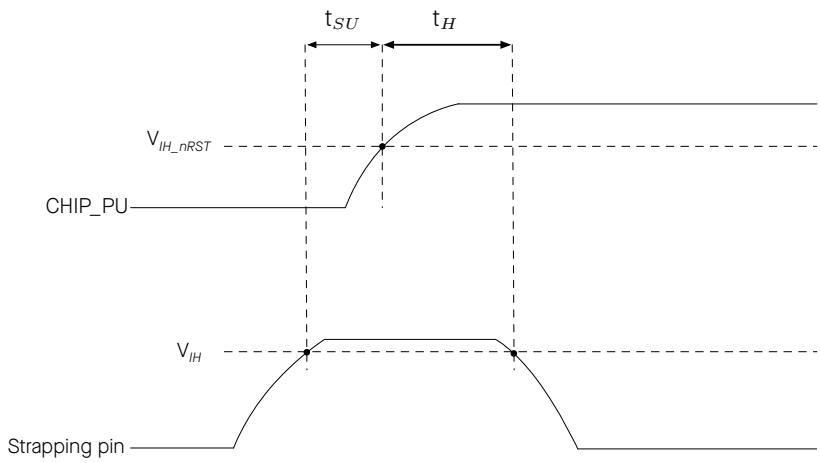

Figure 4: Visualization of Timing Parameters for the Strapping Pins

4.1 Chip Boot Mode Control

GPIO0 and GPIO2 control the boot mode after the reset is released. See Table 6 *Chip Boot Mode Control*.

Table 6: Chip Boot Mode Control

Boot Mode	GPIO0	GPIO2
SPI Boot Mode	**1**	Any value
Joint Download Boot Mode [2]	0	0

[1] **Bold** marks the default value and configuration.

[2] Joint Download Boot mode supports the following download methods:

- SDIO Download Boot
- UART Download Boot

In Joint Download Boot mode, the detailed boot flow of the chip is put below 5.

Downloaded from Arrow.com.

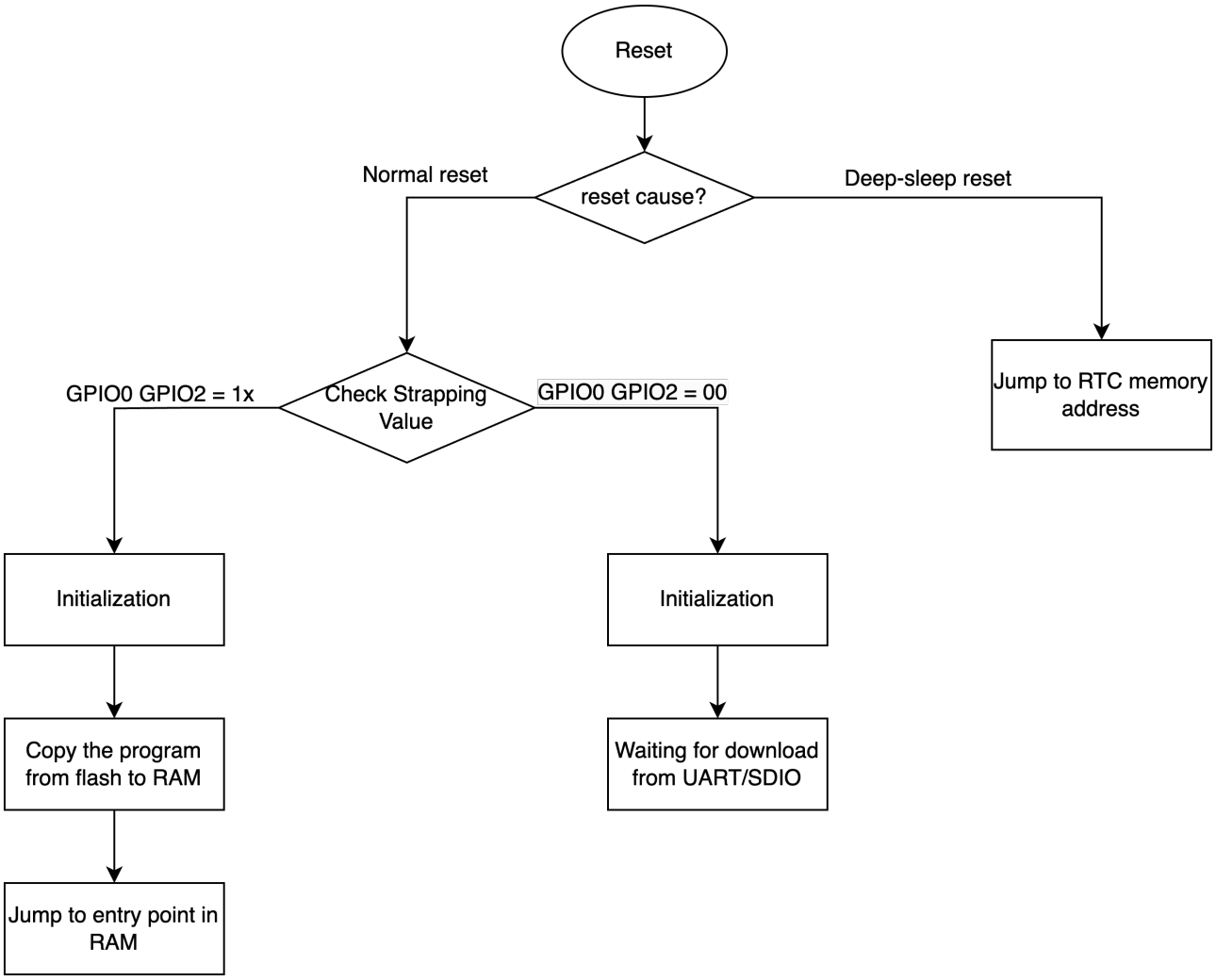

Figure 5: Chip Boot Flow

uart_download_dis controls boot mode behaviors:

It permanently disables Download Boot mode when uart_download_dis is set to 1 (valid only for ESP32 chip revisions v3.0 and higher).

4.2 Internal LDO (VDD_SDIO) Voltage Control

MTDI is used to select the VDD_SDIO power supply voltage at reset:

- MTDI = 0 (by default), VDD_SDIO pin is powered directly from VDD3P3_RTC. Typically this voltage is 3.3 V. For more information, see *ESP32 Series Datasheet* > Section *Power Scheme*.
- MTDI = 1, VDD_SDIO pin is powered from internal 1.8 V LDO.

This functionality can be overridden by setting EFUSE_SDIO_FORCE to 1, in which case the EFUSE_SDIO_TIEH determines the VDD_SDIO voltage:

- EFUSE_SDIO_TIEH = 0, VDD_SDIO connects to 1.8 V LDO.
- EFUSE_SPI_TIEH = 1, VDD_SDIO connects to VDD3P3_RTC.

Downloaded from Arrow.com.

4.3 U0TXD Printing Control

During booting, the strapping pin MTDO can be used to control the U0TXD Printing, as Table 7 shows.

Table 7: U0TXD Printing Control

U0TXD Printing Control	MTDO
Enabled [1]	**1**
Disabled	0

[1] **Bold** marks the default value and configuration.

4.4 Timing Control of SDIO Slave

The strapping pin MTDO and GPIO5 can be used to control the timing of SDIO slave, see Table 8 *Timing Control of SDIO Slave*.

Table 8: Timing Control of SDIO Slave

Edge behavior	MTDO	GPIO5
Falling edge sampling, falling edge output	0	0
Falling edge sampling, rising edge output	0	1
Rising edge sampling, falling edge output	1	0
Rising edge sampling, rising edge output	**1**	**1**

[1] **Bold** marks the default value and configuration.

4.5 JTAG Signal Source Control

If EFUSE_DISABLE_JTAG is set to 1, the source of JTAG signals can be disabled.

4.6 Chip Power-up and Reset

Once the power is supplied to the chip, its power rails need a short time to stabilize. After that, CHIP_PU – the pin used for power-up and reset – is pulled high to activate the chip. For information on CHIP_PU as well as power-up and reset timing, see Figure 6 and Table 9.

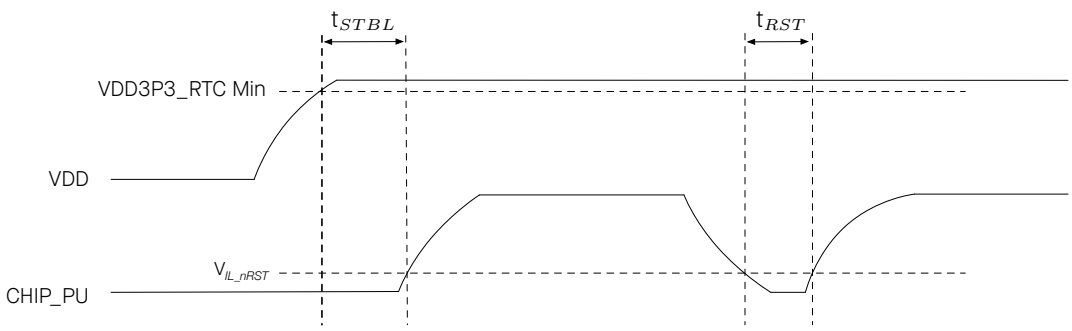

Figure 6: Visualization of Timing Parameters for Power-up and Reset

Downloaded from Arrow.com.

Table 9: Description of Timing Parameters for Power-up and Reset

Parameter	Description	Min (μs)
t_{STBL}	Time reserved for the 3.3 V rails to stabilize before the CHIP_PU pin is pulled high to activate the chip	50
t_{RST}	Time reserved for CHIP_PU to stay below V_{IL_nRST} to reset the chip (see Table 15)	50

For details, please refer to *ESP32 Series Datasheet* > Section *Chip Power-up and Reset*.

Downloaded from Arrow.com.

5 Peripherals

5.1 Peripheral Overview

ESP32-D0WD-V3 chip and ESP32-D0WDR2-V3 chip integrate a rich set of peripherals including SPI, I2S, UART, I2C, pulse count controller, TWAI®, ADC, DAC, touch sensor, etc.

To learn more about on-chip components, please refer to *ESP32 Series Datasheet* > Section *Functional Description*.

Note:

- The content below is sourced from *ESP32 Series Datasheet* > Section *Functional Description*. Some information may not be applicable to ESP32-WROOM-32E and ESP32-WROOM-32UE as not all the IO signals are exposed on the module.
- To learn more about peripheral signals, please refer to *ESP32 Technical Reference Manual* > Section *Peripheral Signal List*.

5.2 Digital Peripherals

5.2.1 General Purpose Input / Output Interface (GPIO)

ESP32 has 34 GPIO pins which can be assigned various functions by programming the appropriate registers. There are several kinds of GPIOs: digital-only, analog-enabled, capacitive-touch-enabled, etc. Analog-enabled GPIOs and Capacitive-touch-enabled GPIOs can be configured as digital GPIOs.

Most of the digital GPIOs can be configured as internal pull-up or pull-down, or set to high impedance. When configured as an input, the input value can be read through the register. The input can also be set to edge-trigger or level-trigger to generate CPU interrupts. Most of the digital IO pins are bi-directional, non-inverting and tristate, including input and output buffers with tristate control. These pins can be multiplexed with other functions, such as the SDIO, UART, SPI, etc. (More details can be found in *ESP32 Series Datasheet* > Appendix, Table *IO_MUX*.) For low-power operations, the GPIOs can be set to hold their states.

5.2.2 Serial Peripheral Interface (SPI)

ESP32 integrates four SPI controllers which can be used to communicate with external devices that use the SPI protocol. Controller SPI0 is used as a buffer for accessing external memory. Controller SPI1 can be used as a master. Controllers SPI2 and SPI3 can be configured as either a master or a slave.

SPI1, SPI2, and SPI3 use signal buses prefixed with SPI, HSPI, and VSPI, respectively.

Features of General Purpose SPI (GP-SPI)

- Programmable data transfer length, in multiples of 1 byte
- Four-line full-duplex/half-duplex communication and three-line half-duplex communication support
- Master mode and slave mode

Downloaded from Arrow.com.

- Programmable CPOL and CPHA
- Programmable clock

Pin Assignment

For SPI, the pins are multiplexed with GPIO6 ~ GPIO11 via the IO MUX. For HSPI, the pins are multiplexed with GPIO2, GPIO4, GPIO12 ~ GPIO15 via the IO MUX. For VSPI, the pins are multiplexed with GPIO5, GPIO18 ~ GPIO19, GPIO21 ~ GPIO23 via the IO MUX.

For more information about the pin assignment, see *ESP32 Series Datasheet* > Section *Peripheral Pin Configurations* and *ESP32 Technical Reference Manual* > Chapter *IO_MUX and GPIO Matrix*.

5.2.3 Universal Asynchronous Receiver Transmitter (UART)

The UART in the ESP32 chip facilitates the transmission and reception of asynchronous serial data between the chip and external UART devices. It consists of two UARTs in the main system, and one low-power LP UART.

Feature List

- Programmable baud rates up to 5 MBaud
- RAM shared by TX FIFOs and RX FIFOs
- Supports input baud rate self-check
- Support for various lengths of data bits and stop bits
- Parity bit support
- Asynchronous communication (RS232 and RS485) and IrDA support
- Supports DMA to communicate data in high speed
- Supports UART wake-up
- Supports both software and hardware flow control

Pin Assignment

The pins for UART can be chosen from any GPIOs via the GPIO Matrix.

For more information about the pin assignment, see *ESP32 Series Datasheet* > Section *Peripheral Pin Configurations* and *ESP32 Technical Reference Manual* > Chapter *IO_MUX and GPIO Matrix*.

5.2.4 I2C Interface

ESP32 has two I2C bus interfaces which can serve as I2C master or slave, depending on the user's configuration.

Feature List

- Two I2C controllers: one in the main system and one in the low-power system
- Standard mode (100 Kbit/s)

Downloaded from Arrow.com.

- Fast mode (400 Kbit/s)
- Up to 5 MHz, yet constrained by SDA pull-up strength
- Support for 7-bit and 10-bit addressing, as well as dual address mode
- Supports continuous data transmission with disabled Serial Clock Line (SCL)
- Supports programmable digital noise filter

Users can program command registers to control I2C interfaces, so that they have more flexibility.

Pin Assignment

For regular I2C, the pins used can be chosen from any GPIOs via the GPIO Matrix.

For more information about the pin assignment, see *ESP32 Series Datasheet* > Section *Peripheral Pin Configurations* and *ESP32 Technical Reference Manual* > Chapter *IO_MUX and GPIO Matrix*.

5.2.5 I2S Interface

The I2S Controller in the ESP32 chip provides a flexible communication interface for streaming digital data in multimedia applications, particularly digital audio applications.

Feature List

- Master mode and slave mode
- Full-duplex and half-duplex communications
- A variety of audio standards supported
- Configurable high-precision output clock
- Supports PDM signal input and output
- Configurable data transmit and receive modes

Pin Assignment

The pins for the I2S Controller can be chosen from any GPIOs via the GPIO Matrix.

For more information about the pin assignment, see *ESP32 Series Datasheet* > Section *Peripheral Pin Configurations* and *ESP32 Technical Reference Manual* > Chapter *IO_MUX and GPIO Matrix*.

5.2.6 Remote Control Peripheral

The Remote Control Peripheral (RMT) controls the transmission and reception of infrared remote control signals.

Feature List

- Eight channels for sending and receiving infrared remote control signals
- Independent transmission and reception capabilities for each channel
- Clock divider counter, state machine, and receiver for each RX channel

Downloaded from Arrow.com.

- Supports various infrared protocols

Pin Assignment

The pins for the Remote Control Peripheral can be chosen from any GPIOs via the GPIO Matrix.

For more information about the pin assignment, see *ESP32 Series Datasheet* > Section *Peripheral Pin Configurations* and *ESP32 Technical Reference Manual* > Chapter *IO_MUX and GPIO Matrix*.

5.2.7 Pulse Counter Controller (PCNT)

The pulse counter controller (PCNT) is designed to count input pulses by tracking rising and falling edges of the input pulse signal.

Feature List

- Eight independent pulse counter units
- Each pulse counter unit has a 16-bit signed counter register and two channels
- Counter modes: increment, decrement, or disable
- Glitch filtering for input pulse signals and control signals
- Selection between counting on rising or falling edges of the input pulse signal

Pin Assignment

The pins for the Pulse Count Controller can be chosen from any GPIOs via the GPIO Matrix.

For more information about the pin assignment, see *ESP32 Series Datasheet* > Section *Peripheral Pin Configurations* and *ESP32 Technical Reference Manual* > Chapter *IO_MUX and GPIO Matrix*.

5.2.8 LED PWM Controller

The LED PWM Controller (LEDC) is designed to generate PWM signals for LED control.

Feature List

- Sixteen independent PWM generators
- Maximum PWM duty cycle resolution of 20 bits
- Eight independent timers with 20-bit counters, configurable fractional clock dividers and counter overflow values
- Adjustable phase of PWM signal output
- PWM duty cycle dithering
- Automatic duty cycle fading

Pin Assignment

The pins for the LED PWM Controller can be chosen from any GPIOs via the GPIO Matrix.

Downloaded from Arrow.com.

For more information about the pin assignment, see *ESP32 Series Datasheet* > Section *Peripheral Pin Configurations* and *ESP32 Technical Reference Manual* > Chapter *IO_MUX and GPIO Matrix*.

5.2.9 Motor Control PWM

The Pulse Width Modulation (PWM) controller can be used for driving digital motors and smart lights. The controller consists of PWM timers, the PWM operator and a dedicated capture sub-module. Each timer provides timing in synchronous or independent form, and each PWM operator generates a waveform for one PWM channel. The dedicated capture sub-module can accurately capture events with external timing.

Feature List

- Three PWM timers for precise timing and frequency control
  - Every PWM timer has a dedicated 8-bit clock prescaler
  - The 16-bit counter in the PWM timer can work in count-up mode, count-down mode, or count-up-down mode
  - A hardware sync can trigger a reload on the PWM timer with a phase register. It will also trigger the prescaler' restart, so that the timer's clock can also be synced, with selectable hardware synchronization source
- Three PWM operators for generating waveform pairs
  - Six PWM outputs to operate in several topologies
  - Configurable dead time on rising and falling edges; each set up independently
  - Modulating of PWM output by high-frequency carrier signals, useful when gate drivers are insulated with a transformer
- Fault Detection module
  - Programmable fault handling in both cycle-by-cycle mode and one-shot mode
  - A fault condition can force the PWM output to either high or low logic levels
- Capture module for hardware-based signal processing
  - Speed measurement of rotating machinery
  - Measurement of elapsed time between position sensor pulses
  - Period and duty cycle measurement of pulse train signals
  - Decoding current or voltage amplitude derived from duty-cycle-encoded signals of current/voltage sensors
  - Three individual capture channels, each of which with a 32-bit time-stamp register
  - Selection of edge polarity and prescaling of input capture signals
  - The capture timer can sync with a PWM timer or external signals

Pin Assignment

The pins for the Motor Control PWM can be chosen from any GPIOs via the GPIO Matrix.

Downloaded from Arrow.com.

For more information about the pin assignment, see *ESP32 Series Datasheet* > Section *Peripheral Pin Configurations* and *ESP32 Technical Reference Manual* > Chapter *IO_MUX and GPIO Matrix*.

5.2.10 SD/SDIO/MMC Host Controller

An SD/SDIO/MMC host controller is available on ESP32.

Feature List

- Supports two external cards
- Supports SD Memory Card standard: version 3.0 and version 3.01)
- Supports SDIO Version 3.0
- Supports Consumer Electronics Advanced Transport Architecture (CE-ATA Version 1.1)
- Supports Multimedia Cards (MMC version 4.41, eMMC version 4.5 and version 4.51)

The controller allows up to 80 MHz clock output in three different data-bus modes: 1-bit, 4-bit, and 8-bit modes. It supports two SD/SDIO/MMC4.41 cards in a 4-bit data-bus mode. It also supports one SD card operating at 1.8 V.

Pin Assignment

The pins for SD/SDIO/MMC Host Controller are multiplexed with GPIO2, GPIO4, GPIO6 ~ GPIO15 via IO MUX.

For more information about the pin assignment, see *ESP32 Series Datasheet* > Section *Peripheral Pin Configurations* and *ESP32 Technical Reference Manual* > Chapter *IO_MUX and GPIO Matrix*.

5.2.11 SDIO/SPI Slave Controller

ESP32 integrates an SD device interface that conforms to the industry-standard SDIO Card Specification Version 2.0, and allows a host controller to access the SoC, using the SDIO bus interface and protocol. ESP32 acts as the slave on the SDIO bus. The host can access the SDIO-interface registers directly and can access shared memory via a DMA engine, thus maximizing performance without engaging the processor cores.

Feature List

The SDIO/SPI slave controller supports the following features:

- SPI, 1-bit SDIO, and 4-bit SDIO transfer modes over the full clock range from 0 to 50 MHz
- Configurable sampling and driving clock edge
- Special registers for direct access by host
- Interrupts to host for initiating data transfer
- Automatic loading of SDIO bus data and automatic discarding of padding data
- Block size of up to 512 bytes
- Interrupt vectors between the host and the slave, allowing both to interrupt each other
- Supports DMA for data transfer

Downloaded from Arrow.com.

Pin Assignment

The pins for SDIO/SPI Slave Controller are multiplexed with GPIO2, GPIO4, GPIO6 ~ GPIO15 via IO MUX.

For more information about the pin assignment, see *ESP32 Series Datasheet* > Section *Peripheral Pin Configurations* and *ESP32 Technical Reference Manual* > Chapter *IO_MUX and GPIO Matrix*.

5.2.12 TWAI® Controller

The Two-wire Automotive Interface (TWAI®) is a multi-master, multi-cast communication protocol designed for automotive applications. The TWAI controller facilitates the communication based on this protocol.

Feature List

- Compatible with ISO 11898-1 protocol (CAN Specification 2.0)
- Standard frame format (11-bit ID) and extended frame format (29-bit ID)
- Bit rates:
  - From 25 Kbit/s to 1 Mbit/s in chip revision v0.0/v1.0/v1.1
  - From 12.5 Kbit/s to 1 Mbit/s in chip revision v3.0/v3.1
- Multiple modes of operation: Normal, Listen Only, and Self-Test
- 64-byte receive FIFO
- Special transmissions: single-shot transmissions and self reception
- Acceptance filter (single and dual filter modes)
- Error detection and handling: error counters, configurable error interrupt threshold, error code capture, arbitration lost capture

Pin Assignment

The pins for the Two-wire Automotive Interface can be chosen from any GPIOs via the GPIO Matrix.

For more information about the pin assignment, see *ESP32 Series Datasheet* > Section *Peripheral Pin Configurations* and *ESP32 Technical Reference Manual* > Chapter *IO_MUX and GPIO Matrix*.

5.2.13 Ethernet MAC Interface

An IEEE-802.3-2008-compliant Media Access Controller (MAC) is provided for Ethernet LAN communications. ESP32 requires an external physical interface device (PHY) to connect to the physical LAN bus (twisted-pair, fiber, etc.). The PHY is connected to ESP32 through 17 signals of MII or nine signals of RMII.

Feature List

- 10 Mbps and 100 Mbps rates
- Dedicated DMA controller allowing high-speed transfer between the dedicated SRAM and Ethernet MAC
- Tagged MAC frame (VLAN support)
- Half-duplex (CSMA/CD) and full-duplex operation

Downloaded from Arrow.com.

- MAC control sublayer (control frames)
- 32-bit CRC generation and removal
- Several address-filtering modes for physical and multicast address (multicast and group addresses)
- 32-bit status code for each transmitted or received frame
- Internal FIFOs to buffer transmit and receive frames. The transmit FIFO and the receive FIFO are both 512 words (32-bit)
- Hardware PTP (Precision Time Protocol) in accordance with IEEE 1588 2008 (PTP V2)
- 25 MHz/50 MHz clock output

Pin Assignment

For information about the pin assignment of Ethernet MAC Interface, see *ESP32 Series Datasheet* > Section *Peripheral Pin Configurations* and *ESP32 Technical Reference Manual* > Chapter *IO_MUX and GPIO Matrix*.

5.3 Analog Peripherals

5.3.1 Analog-to-Digital Converter (ADC)

ESP32 integrates two 12-bit SAR ADCs and supports measurements on 18 channels (analog-enabled pins). The ULP coprocessor in ESP32 is also designed to measure voltage, while operating in the sleep mode, which enables low-power consumption. The CPU can be woken up by a threshold setting and/or via other triggers.

Table 10 describes the ADC characteristics.

Table 10: ADC Characteristics

Parameter	Description	Min	Max	Unit
DNL (Differential nonlinearity)	RTC controller; ADC connected to an external 100 nF capacitor; DC signal input; ambient temperature at 25 °C; Wi-Fi&Bluetooth off	–7	7	LSB
INL (Integral nonlinearity)		–12	12	LSB
Sampling rate	RTC controller	—	200	ksps
	DIG controller	—	2	Msps

Notes:

- When atten = 3 and the measurement result is above 3000 (voltage at approx. 2450 mV), the ADC accuracy will be worse than described in the table above.
- To get better DNL results, users can take multiple sampling tests with a filter, or calculate the average value.
- The input voltage range of GPIO pins within VDD3P3_RTC domain should strictly follow the DC characteristics provided in Table 15. Otherwise, measurement errors may be introduced, and chip performance may be affected.

Downloaded from Arrow.com.

By default, there are ±6% differences in measured results between chips. ESP-IDF provides couple of calibration methods for ADC1. Results after calibration using eFuse Vref value are shown in Table 11. For higher accuracy, users may apply other calibration methods provided in ESP-IDF, or implement their own.

Table 11: ADC Calibration Results

Parameter	Description	Min	Max	Unit
Total error	Atten = 0, effective measurement range of 100 ~ 950 mV	−23	23	mV
	Atten = 1, effective measurement range of 100 ~ 1250 mV	−30	30	mV
	Atten = 2, effective measurement range of 150 ~ 1750 mV	−40	40	mV
	Atten = 3, effective measurement range of 150 ~ 2450 mV	−60	60	mV

Pin Assignment

With appropriate settings, the ADCs can be configured to measure voltage on 18 pins maximum. For detailed information about the pin assignment, see *ESP32 Series Datasheet* > Section *Peripheral Pin Configurations* and *ESP32 Technical Reference Manual* > Chapter *IO_MUX and GPIO Matrix*.

5.3.2 Digital-to-Analog Converter (DAC)

Two 8-bit DAC channels can be used to convert two digital signals into two analog voltage signal outputs. The design structure is composed of integrated resistor strings and a buffer. This dual DAC supports power supply as input voltage reference. The two DAC channels can also support independent conversions.

Pin Assignment

The DAC can be configured by GPIO 25 and GPIO 26. For detailed information about the pin assignment, see *ESP32 Series Datasheet* > Section *Peripheral Pin Configurations* and *ESP32 Technical Reference Manual* > Chapter *IO_MUX and GPIO Matrix*.

5.3.3 Touch Sensor

ESP32 has 10 capacitive-sensing GPIOs, which detect variations induced by touching or approaching the GPIOs with a finger or other objects. The low-noise nature of the design and the high sensitivity of the circuit allow relatively small pads to be used. Arrays of pads can also be used, so that a larger area or more points can be detected.

Pin Assignment

The 10 capacitive-sensing GPIOs are listed in Table 12.

Table 12: Capacitive-Sensing GPIOs Available on ESP32

Capacitive-Sensing Signal Name	Pin Name
T0	GPIO4
T1	GPIO0
T2	GPIO2
T3	MTDO
T4	MTCK

Downloaded from Arrow.com.

Capacitive-Sensing Signal Name	Pin Name
T5	MTDI
T6	MTMS
T7	GPIO27
T8	32K_XN
T9	32K_XP

Note:
ESP32 Touch Sensor has not passed the Conducted Susceptibility (CS) test for now, and thus has limited application scenarios.

Downloaded from Arrow.com.

6 Electrical Characteristics

6.1 Absolute Maximum Ratings

Stresses above those listed in *Absolute Maximum Ratings* may cause permanent damage to the device. These are stress ratings only and functional operation of the device at these or any other conditions beyond those indicated under *Recommended Operating Conditions* is not implied. Exposure to absolute-maximum-rated conditions for extended periods may affect device reliability.

Table 13: Absolute Maximum Ratings

Symbol	Parameter	Min	Max	Unit
VDD33	Power supply voltage	−0.3	3.6	V
T_{STORE}	Storage temperature	−40	105	°C

* Please see Appendix IO MUX of *ESP32 Series Datasheet* for IO's power domain.

6.2 Recommended Operating Conditions

Table 14: Recommended Operating Conditions

Symbol	Parameter		Min	Typ	Max	Unit
VDD33	Power supply voltage		3.0	3.3	3.6	V
I_{VDD}	Current delivered by external power supply		0.5	—	—	A
T	Operating ambient temperature	85 °C version	−40	—	85	°C
		105 °C version			105	

6.3 DC Characteristics (3.3 V, 25 °C)

Table 15: DC Characteristics (3.3 V, 25 °C)

Symbol	Parameter	Min	Typ	Max	Unit
C_{IN}	Pin capacitance	—	2	—	pF
V_{IH}	High-level input voltage	0.75 × VDD[1]	—	VDD[1] + 0.3	V
V_{IL}	Low-level input voltage	−0.3	—	0.25 × VDD[1]	V
I_{IH}	High-level input current	—	—	50	nA
I_{IL}	Low-level input current	—	—	50	nA
V_{OH}	High-level output voltage	0.8 × VDD[1]	—	—	V
V_{OL}	Low-level output voltage	—	—	0.1 × VDD[1]	V

Cont'd on next page

Downloaded from Arrow.com.

Table 15 – cont'd from previous page

Symbol	Parameter		Min	Typ	Max	Unit
I_{OH}	High-level source current (VDD[1] = 3.3 V, V_{OH} >= 2.64 V, output drive strength set to the maximum)	VDD3P3_CPU power domain [1, 2]	—	40	—	mA
		VDD3P3_RTC power domain [1, 2]	—	40	—	mA
		VDD_SDIO power domain [1, 3]	—	20	—	mA
I_{OL}	Low-level sink current (VDD[1] = 3.3 V, V_{OL} = 0.495 V, output drive strength set to the maximum)		—	28	—	mA
R_{PU}	Resistance of internal pull-up resistor		—	45	—	kΩ
R_{PD}	Resistance of internal pull-down resistor		—	45	—	kΩ
V_{IH_nRST}	Chip reset release voltage (CHIP_PU voltage is within the specified range)		0.75 × VDD [1]	—	VDD [1] + 0.3	V
V_{IL_nRST}	Low-level input voltage of CHIP_PU to shut down the chip		—	—	0.6	V

[1] Please see Appendix IO MUX of *ESP32 Series Datasheet* for IO's power domain. VDD is the I/O voltage for a particular power domain of pins.

[2] For VDD3P3_CPU and VDD3P3_RTC power domain, per-pin current sourced in the same domain is gradually reduced from around 40 mA to around 29 mA, V_{OH}>=2.64 V, as the number of current-source pins increases.

[3] Pins occupied by flash and/or PSRAM in the VDD_SDIO power domain were excluded from the test.

6.4 Current Consumption Characteristics

Owing to the use of advanced power-management technologies, the module can switch between different power modes. For details on different power modes, please refer to Section *RTC and Low-Power Management*
in *ESP32 Series Datasheet*.

The current consumption measurements are taken with a 3.3 V supply at 25 °C ambient temperature.

TX current consumption is rated at a 100% duty cycle.

RX current consumption is rated when the peripherals are disabled and the CPU idle.

Table 16: Current Consumption Depending on RF Modes

Work mode	Description		Average (mA)	Peak (mA)
Active (RF working)	TX	802.11b, 20 MHz, 1 Mbps, @19.5 dBm	239	379
		802.11g, 20 MHz, 54 Mbps, @15 dBm	190	276
		802.11n, 20 MHz, MCS7, @13 dBm	183	258
		802.11n, 40 MHz, MCS7, @13 dBm	165	211
	RX	802.11b/g/n, 20 MHz	112	112
		802.11n, 40 MHz	118	118

Downloaded from Arrow.com.

6.5 Memory Specifications

The data below is sourced from the memory vendor datasheet. These values are guaranteed through design and/or characterization but are not fully tested in production. Devices are shipped with the memory erased.

Table 17: Flash Specifications

Parameter	Description	Min	Typ	Max	Unit
VCC	Power supply voltage (1.8 V)	1.65	1.80	2.00	V
	Power supply voltage (3.3 V)	2.7	3.3	3.6	V
F_C	Maximum clock frequency	80	—	—	MHz
—	Program/erase cycles	100,000	—	—	cycles
T_{RET}	Data retention time	20	—	—	years
T_{PP}	Page program time	—	0.8	5	ms
T_{SE}	Sector erase time (4 KB)	—	70	500	ms
T_{BE1}	Block erase time (32 KB)	—	0.2	2	s
T_{BE2}	Block erase time (64 KB)	—	0.3	3	s
T_{CE}	Chip erase time (16 Mb)	—	7	20	s
	Chip erase time (32 Mb)	—	20	60	s
	Chip erase time (64 Mb)	—	25	100	s
	Chip erase time (128 Mb)	—	60	200	s
	Chip erase time (256 Mb)	—	70	300	s

Table 18: PSRAM Specifications

Parameter	Description	Min	Typ	Max	Unit
VCC	Power supply voltage (1.8 V)	1.62	1.80	1.98	V
	Power supply voltage (3.3 V)	2.7	3.3	3.6	V
F_C	Maximum clock frequency	80	—	—	MHz

Downloaded from Arrow.com.

7 RF Characteristics

This section contains tables with RF characteristics of the Espressif product.

The RF data is measured at the antenna port, where RF cable is connected, including the front-end loss. The external antennas used for the tests on the modules with external antenna connectors have an impedance of 50 Ω.Devices should operate in the center frequency range allocated by regional regulatory authorities. The target center frequency range and the target transmit power are configurable by software. See ESP RF Test Tool and Test Guide for instructions.

Unless otherwise stated, the RF tests are conducted with a 3.3 V (±5%) supply at 25 °C ambient temperature.

7.1 Wi-Fi Radio

Table 19: Wi-Fi RF Characteristics

Name	Description
Center frequency range of operating channel	2412 ~ 2484 MHz
Wi-Fi wireless standard	IEEE 802.11b/g/n

7.1.1 Wi-Fi RF Transmitter (TX) Characteristics

Table 20: TX Power with Spectral Mask and EVM Meeting 802.11 Standards

Rate	Min (dBm)	Typ (dBm)	Max (dBm)
802.11b, 1 Mbps	—	19.5	—
802.11b, 11 Mbps	—	19.5	—
802.11g, 6 Mbps	—	18.0	—
802.11g, 54 Mbps	—	14.0	—
802.11n, HT20, MCS0	—	18.0	—
802.11n, HT20, MCS7	—	13.0	—
802.11n, HT40, MCS0	—	18.0	—
802.11n, HT40, MCS7	—	13.0	—

7.1.2 Wi-Fi RF Receiver (RX) Characteristics

For RX tests, the PER (packet error rate) limit is 8% for 802.11b, and 10% for 802.11g/n.

Table 21: RX Sensitivity

Rate	Min (dBm)	Typ (dBm)	Max (dBm)
802.11b, 1 Mbps	—	-97.0	—
802.11b, 2 Mbps	—	-94.0	—

Cont'd on next page

Downloaded from Arrow.com.

Table 21 – cont'd from previous page

Rate	Min (dBm)	Typ (dBm)	Max (dBm)
802.11b, 5.5 Mbps	—	−92.0	—
802.11b, 11 Mbps	—	−88.0	—
802.11g, 6 Mbps	—	−93.0	—
802.11g, 9 Mbps	—	−91.0	—
802.11g, 12 Mbps	—	−89.0	—
802.11g, 18 Mbps	—	−87.0	—
802.11g, 24 Mbps	—	−84.0	—
802.11g, 36 Mbps	—	−80.0	—
802.11g, 48 Mbps	—	−77.0	—
802.11g, 54 Mbps	—	−75.0	—
802.11n, HT20, MCS0	—	−92.0	—
802.11n, HT20, MCS1	—	−88.0	—
802.11n, HT20, MCS2	—	−86.0	—
802.11n, HT20, MCS3	—	-83.0	—
802.11n, HT20, MCS4	—	−80.0	—
802.11n, HT20, MCS5	—	−76.0	—
802.11n, HT20, MCS6	—	−74.0	—
802.11n, HT20, MCS7	—	−72.0	—
802.11n, HT40, MCS0	—	−89.0	—
802.11n, HT40, MCS1	—	−85.0	—
802.11n, HT40, MCS2	—	−83.0	—
802.11n, HT40, MCS3	—	−80.0	—
802.11n, HT40, MCS4	—	−76.0	—
802.11n, HT40, MCS5	—	−72.0	—
802.11n, HT40, MCS6	—	−71.0	—
802.11n, HT40, MCS7	—	−69.0	—

Table 22: Maximum RX Level

Rate	Min (dBm)	Typ (dBm)	Max (dBm)
802.11b, 1 Mbps	—	5	—
802.11b, 11 Mbps	—	5	—
802.11g, 6 Mbps	—	0	—
802.11g, 54 Mbps	—	-8	—
802.11n, HT20, MCS0	—	0	—
802.11n, HT20, MCS7	—	-8	—
802.11n, HT40, MCS0	—	0	—
802.11n, HT40, MCS7	—	-8	—

Downloaded from Arrow.com.

Table 23: RX Adjacent Channel Rejection

Rate	Min (dB)	Typ (dB)	Max (dB)
802.11b, 11 Mbps	—	35	—
802.11g, 6 Mbps	—	27	—
802.11g, 54 Mbps	—	13	—
802.11n, HT20, MCS0	—	27	—
802.11n, HT20, MCS7	—	12	—
802.11n, HT40, MCS0	—	16	—
802.11n, HT40, MCS7	—	7	—

7.2 Bluetooth Radio

Table 24: Bluetooth LE RF Characteristics

Name	Description
Center frequency range of operating channel	2402 ~ 2480 MHz
RF transmit power range	−12.0 ~ 9.0 dBm

7.2.1 Receiver – Basic Data Rate

Table 25: Receiver Characteristics – Basic Data Rate

Parameter	Conditions	Min	Typ	Max	Unit
Sensitivity @0.1% BER	—	−90	−89	−88	dBm
Maximum received signal @0.1% BER	—	0	—	—	dBm
Co-channel C/I	—	—	+7	—	dB
Adjacent channel selectivity C/I	F = F0 + 1 MHz	—	—	−6	dB
	F = F0 − 1 MHz	—	—	−6	dB
	F = F0 + 2 MHz	—	—	−25	dB
	F = F0 − 2 MHz	—	—	−33	dB
	F = F0 + 3 MHz	—	—	−25	dB
	F = F0 − 3 MHz	—	—	−45	dB
Out-of-band blocking performance	30 MHz ~ 2000 MHz	−10	—	—	dBm
	2000 MHz ~ 2400 MHz	−27	—	—	dBm
	2500 MHz ~ 3000 MHz	−27	—	—	dBm
	3000 MHz ~ 12.5 GHz	−10	—	—	dBm
Intermodulation	—	−36	—	—	dBm

7.2.2 Transmitter – Basic Data Rate

Downloaded from Arrow.com.

Table 26: Transmitter Characteristics – Basic Data Rate

Parameter	Conditions	Min	Typ	Max	Unit
RF transmit power*	—	—	0	—	dBm
Gain control step	—	—	3	—	dB
RF power control range	—	−12	—	+9	dBm
+20 dB bandwidth	—	—	0.9	—	MHz
Adjacent channel transmit power	F = F0 ± 2 MHz	—	−55	—	dBm
	F = F0 ± 3 MHz	—	−55	—	dBm
	F = F0 ± > 3 MHz	—	−59	—	dBm
$\Delta f1_{avg}$	—	—	—	155	kHz
$\Delta f2_{max}$	—	127	—	—	kHz
$\Delta f2_{avg}/\Delta f1_{avg}$	—	—	0.92	—	—
ICFT	—	—	−7	—	kHz
Drift rate	—	—	0.7	—	kHz/50 μs
Drift (DH1)	—	—	6	—	kHz
Drift (DH5)	—	—	6	—	kHz

* There are a total of eight power levels from 0 to 7, and the transmit power ranges from −12 dBm to 9 dBm. When the power level rises by 1, the transmit power increases by 3 dB. Power level 4 is used by default and the corresponding transmit power is 0 dBm.

7.2.3 Receiver – Enhanced Data Rate

Table 27: Receiver Characteristics – Enhanced Data Rate

Parameter	Conditions	Min	Typ	Max	Unit
$\pi/4$ DQPSK					
Sensitivity @0.01% BER	—	−90	−89	−88	dBm
Maximum received signal @0.01% BER	—	—	0	—	dBm
Co-channel C/I	—	—	11	—	dB
Adjacent channel selectivity C/I	F = F0 + 1 MHz	—	−7	—	dB
	F = F0 − 1 MHz	—	−7	—	dB
	F = F0 + 2 MHz	—	−25	—	dB
	F = F0 − 2 MHz	—	−35	—	dB
	F = F0 + 3 MHz	—	−25	—	dB
	F = F0 − 3 MHz	—	−45	—	dB
8DPSK					
Sensitivity @0.01% BER	—	−84	−83	−82	dBm
Maximum received signal @0.01% BER	—	—	−5	—	dBm
C/I c-channel	—	—	18	—	dB
Adjacent channel selectivity C/I	F = F0 + 1 MHz	—	2	—	dB
	F = F0 − 1 MHz	—	2	—	dB
	F = F0 + 2 MHz	—	−25	—	dB
	F = F0 − 2 MHz	—	−25	—	dB
	F = F0 + 3 MHz	—	−25	—	dB

Cont'd on next page

Downloaded from Arrow.com.

Table 27 – cont'd from previous page

Parameter	Conditions	Min	Typ	Max	Unit
	F = F0 – 3 MHz	—	–38	—	dB

7.2.4 Transmitter – Enhanced Data Rate

Table 28: Transmitter Characteristics – Enhanced Data Rate

Parameter	Conditions	Min	Typ	Max	Unit
RF transmit power (see note under Table 26)	—	—	0	—	dBm
Gain control step	—	—	3	—	dB
RF power control range	—	–12	—	+9	dBm
$\pi/4$ DQPSK max w0	—	—	–0.72	—	kHz
$\pi/4$ DQPSK max wi	—	—	–6	—	kHz
$\pi/4$ DQPSK max |wi + w0|	—	—	–7.42	—	kHz
8DPSK max w0	—	—	0.7	—	kHz
8DPSK max wi	—	—	–9.6	—	kHz
8DPSK max |wi + w0|	—	—	–10	—	kHz
$\pi/4$ DQPSK modulation accuracy	RMS DEVM	—	4.28	—	%
	99% DEVM	—	100	—	%
	Peak DEVM	—	13.3	—	%
8 DPSK modulation accuracy	RMS DEVM	—	5.8	—	%
	99% DEVM	—	100	—	%
	Peak DEVM	—	14	—	%
In-band spurious emissions	F = F0 ± 1 MHz	—	–46	—	dBm
	F = F0 ± 2 MHz	—	–44	—	dBm
	F = F0 ± 3 MHz	—	–49	—	dBm
	F = F0 +/– > 3 MHz	—	—	–53	dBm
EDR differential phase coding	—	—	100	—	%

7.3 Bluetooth LE Radio

7.3.1 Receiver

Table 29: Receiver Characteristics – Bluetooth LE

Parameter	Conditions	Min	Typ	Max	Unit
Sensitivity @30.8% PER	—	–94	–93	–92	dBm
Maximum received signal @30.8% PER	—	0	—	—	dBm
Co-channel C/I	—	—	+10	—	dB
Adjacent channel selectivity C/I	F = F0 + 1 MHz	—	–5	—	dB
	F = F0 – 1 MHz	—	–5	—	dB
	F = F0 + 2 MHz	—	–25	—	dB
	F = F0 – 2 MHz	—	–35	—	dB
	F = F0 + 3 MHz	—	–25	—	dB

Downloaded from Arrow.com.

Parameter	Conditions	Min	Typ	Max	Unit
	F = F0 – 3 MHz	—	–45	—	dB
Out-of-band blocking performance	30 MHz ~ 2000 MHz	–10	—	—	dBm
	2000 MHz ~ 2400 MHz	–27	—	—	dBm
	2500 MHz ~ 3000 MHz	–27	—	—	dBm
	3000 MHz ~ 12.5 GHz	–10	—	—	dBm
Intermodulation	—	–36	—	—	dBm

7.3.2 Transmitter

Table 30: Transmitter Characteristics – Bluetooth LE

Parameter	Conditions	Min	Typ	Max	Unit
RF transmit power (see note under Table 26)	—	—	0	—	dBm
Gain control step	—	—	3	—	dB
RF power control range	—	–12	—	+9	dBm
Adjacent channel transmit power	F = F0 ± 2 MHz	—	–55	—	dBm
	F = F0 ± 3 MHz	—	–57	—	dBm
	F = F0 ± > 3 MHz	—	–59	—	dBm
$\Delta f1_{avg}$	—	—	—	265	kHz
$\Delta f2_{max}$	—	210	—	—	kHz
$\Delta f2_{avg}/\Delta f1_{avg}$	—	—	+0.92	—	—
ICFT	—	—	–10	—	kHz
Drift rate	—	—	0.7	—	kHz/50 μs
Drift	—	—	2	—	kHz

Downloaded from Arrow.com.

8 Module Schematics

This is the reference design of the module.

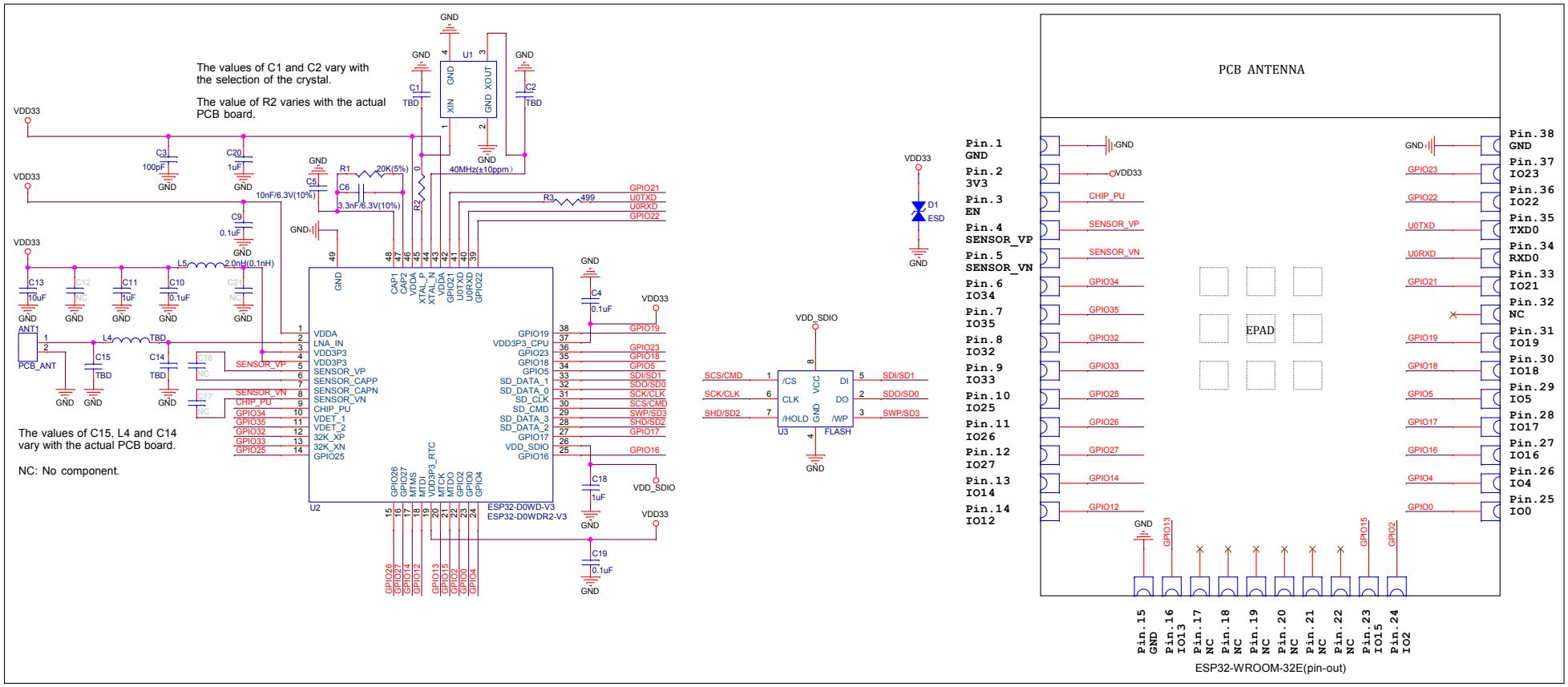

Figure 7: ESP32-WROOM-32E Schematics

Downloaded from Arrow.com.

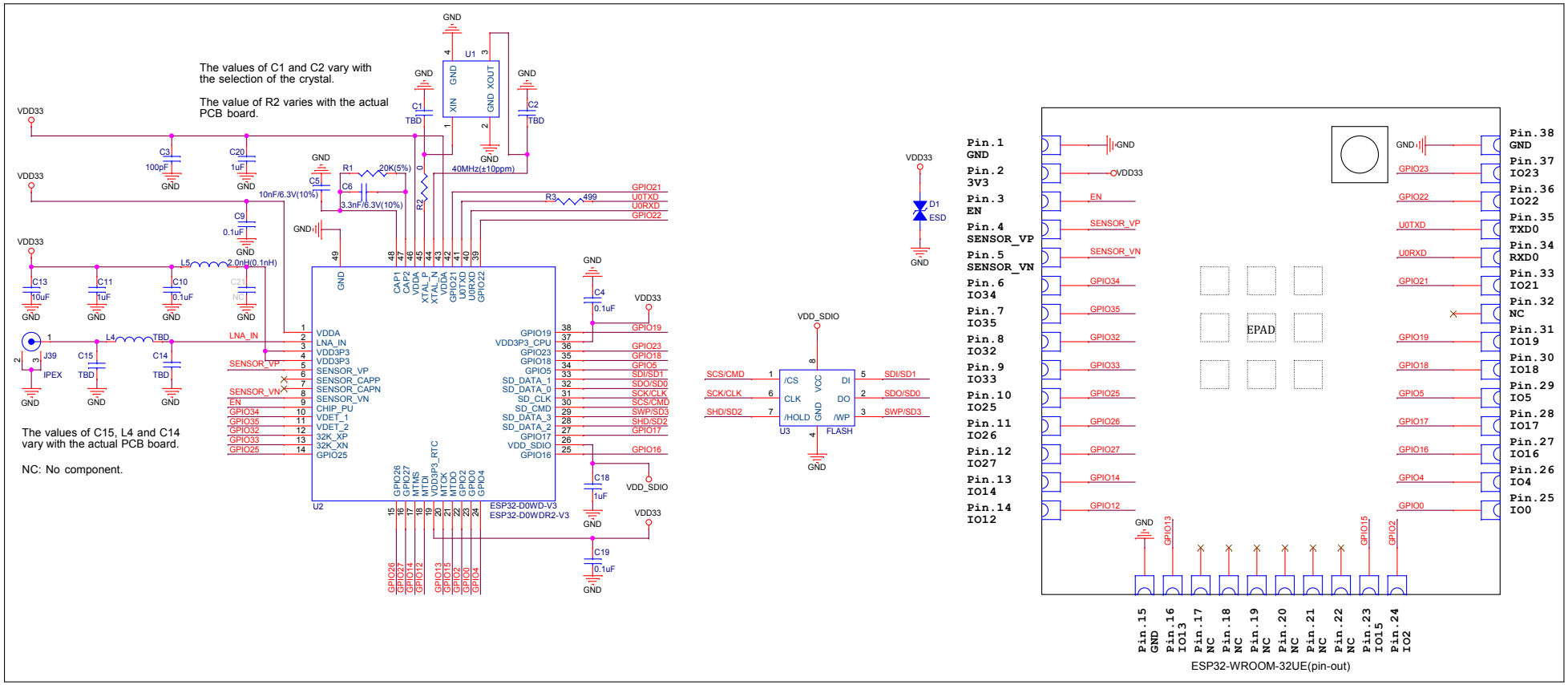

Figure 8: ESP32-WROOM-32UE Schematics

Downloaded from Arrow.com.

9 Peripheral Schematics

This is the typical application circuit of the module connected with peripheral components (for example, power supply, antenna, reset button, JTAG interface, and UART interface).

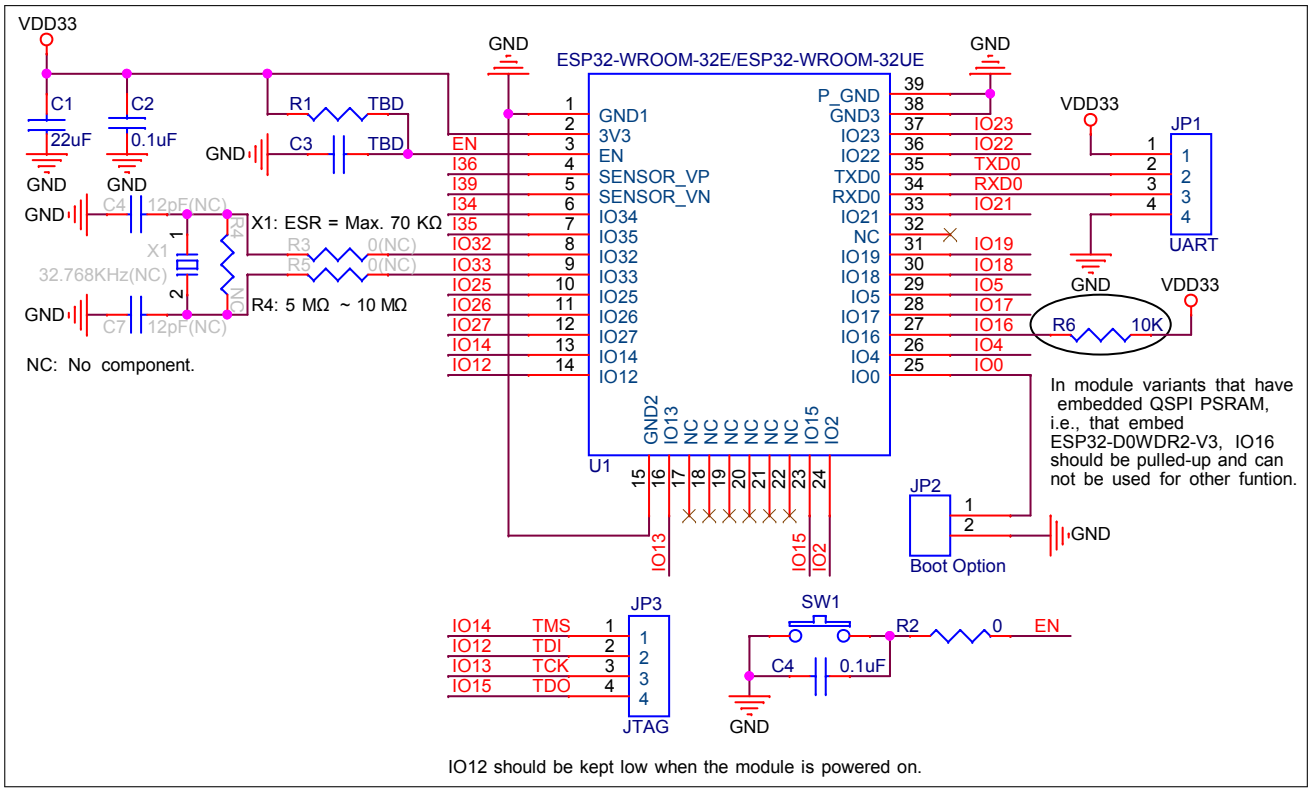

Figure 9: Peripheral Schematics

- Soldering EPAD Pin 39 to the ground of the base board is not a must. If you choose to solder it, please apply the correct amount of soldering paste. Too much soldering paste may increase the gap between the module and the baseboard. As a result, the adhesion between other pins and the baseboard may be poor.
- To ensure that the power supply to the ESP32 chip is stable during power-up, it is advised to add an RC delay circuit at the EN pin. The recommended setting for the RC delay circuit is usually R = 10 kΩ and C = 1 μF. However, specific parameters should be adjusted based on the power-up timing of the module and the power-up and reset sequence timing of the chip. For ESP32's power-up and reset sequence timing diagram, please refer to Section 4.6 *Chip Power-up and Reset*.
- UART0 is used to download firmware and log output. When using the AT firmware, please note that the UART GPIO is already configured (refer to *Hardware Connection*). It is recommended to use the default configuration.

Downloaded from Arrow.com.

10 Physical Dimensions

10.1 Module Dimensions

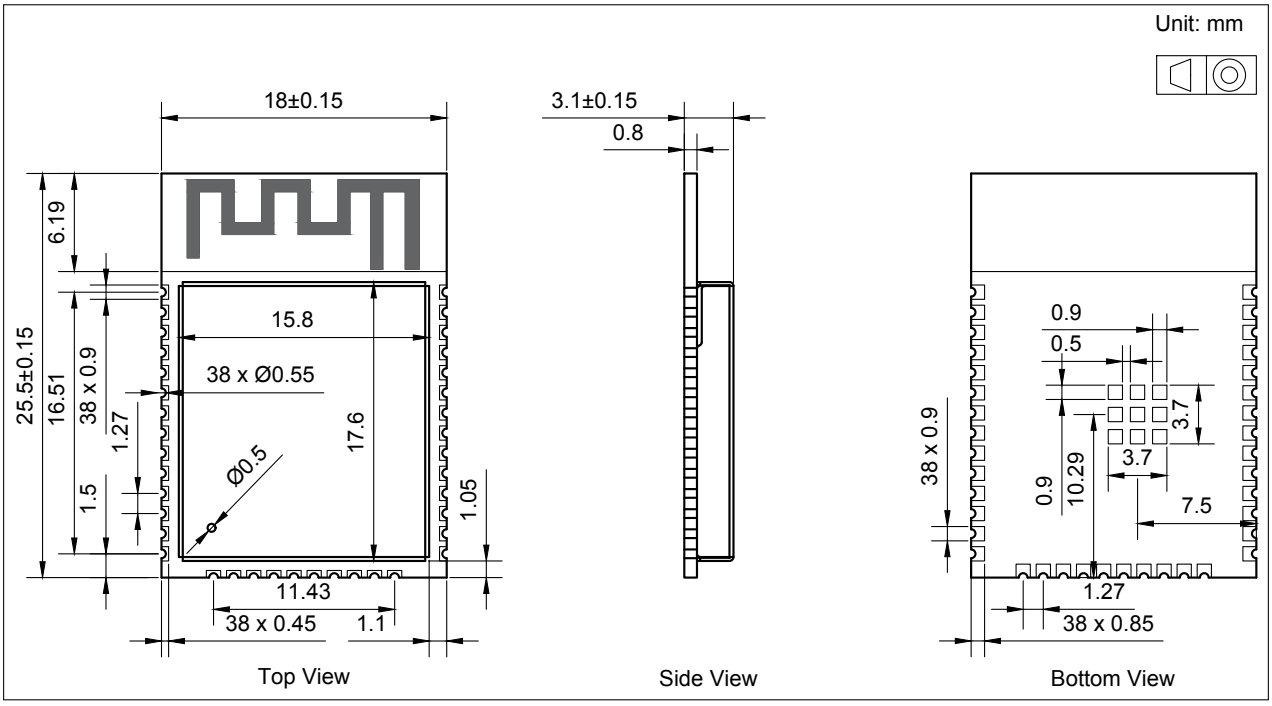

Figure 10: ESP32-WROOM-32E Physical Dimensions

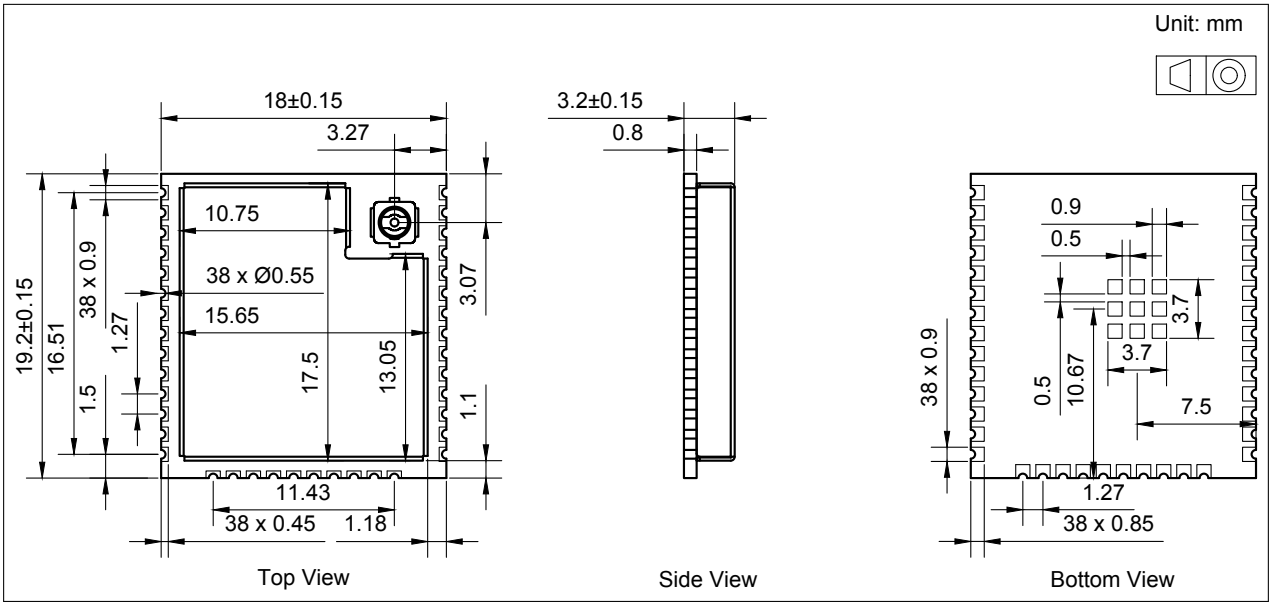

Figure 11: ESP32-WROOM-32UE Physical Dimensions

Note:

For information about tape, reel, and product marking, please refer to *ESP32 Module Packaging Information*.

Downloaded from Arrow.com.

10.2 Dimensions of External Antenna Connector

ESP32-WROOM-32UE uses the first generation external antenna connector as shown in Figure 12 *Dimensions of External Antenna Connector*. This connector is compatible with the following connectors:

- U.FL Series connector from Hirose
- MHF I connector from I-PEX
- AMC connector from Amphenol

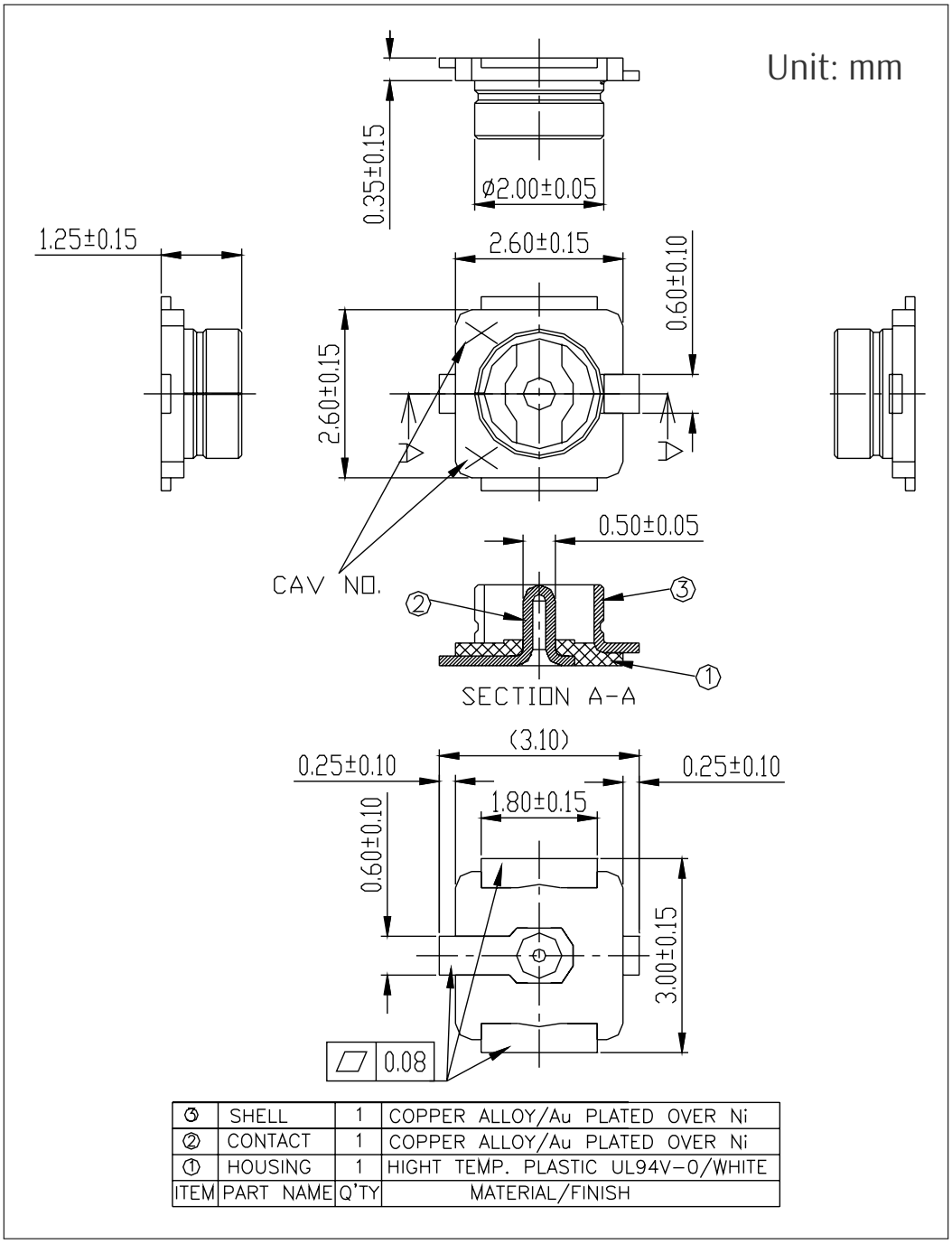

Figure 12: Dimensions of External Antenna Connector

The external antenna used for ESP32-WROOM-32UE during certification testing is the first generation

Downloaded from Arrow.com.

monopole antenna, with material code TFPD05H08750011.

The module does not include an external antenna upon shipment. If needed, select a suitable external antenna based on the product's usage environment and performance requirements.

It is recommended to select an antenna that meets the following requirements:

- 2.4 GHz band
- 50 Ω impedance
- The maximum gain does not exceed 2.33 dBi, the gain of the antenna used for certification
- The connector matches the specifications shown in Figure 12 *Dimensions of External Antenna Connector*

Note:
If you use an external antenna of a different type or gain, additional testing, such as EMC, may be required beyond the existing antenna test reports for Espressif modules. Specific requirements depend on the certification type.

Downloaded from Arrow.com.

11 PCB Layout Recommendations

11.1 PCB Land Pattern

This section provides the following resources for your reference:

- Figures for recommended PCB land patterns with all the dimensions needed for PCB design. See Figure 13 *ESP32-WROOM-32E Recommended PCB Land Pattern* and Figure 14 *ESP32-WROOM-32UE Recommended PCB Land Pattern*.
- Source files of recommended PCB land patterns to measure dimensions not covered in Figure 13 and Figure 14. You can view the source files for ESP32-WROOM-32E and ESP32-WROOM-32UE with Autodesk Viewer.
- 3D models of ESP32-WROOM-32E and ESP32-WROOM-32UE. Please make sure that you download the 3D model file in .STEP format (beware that some browsers might add .txt).

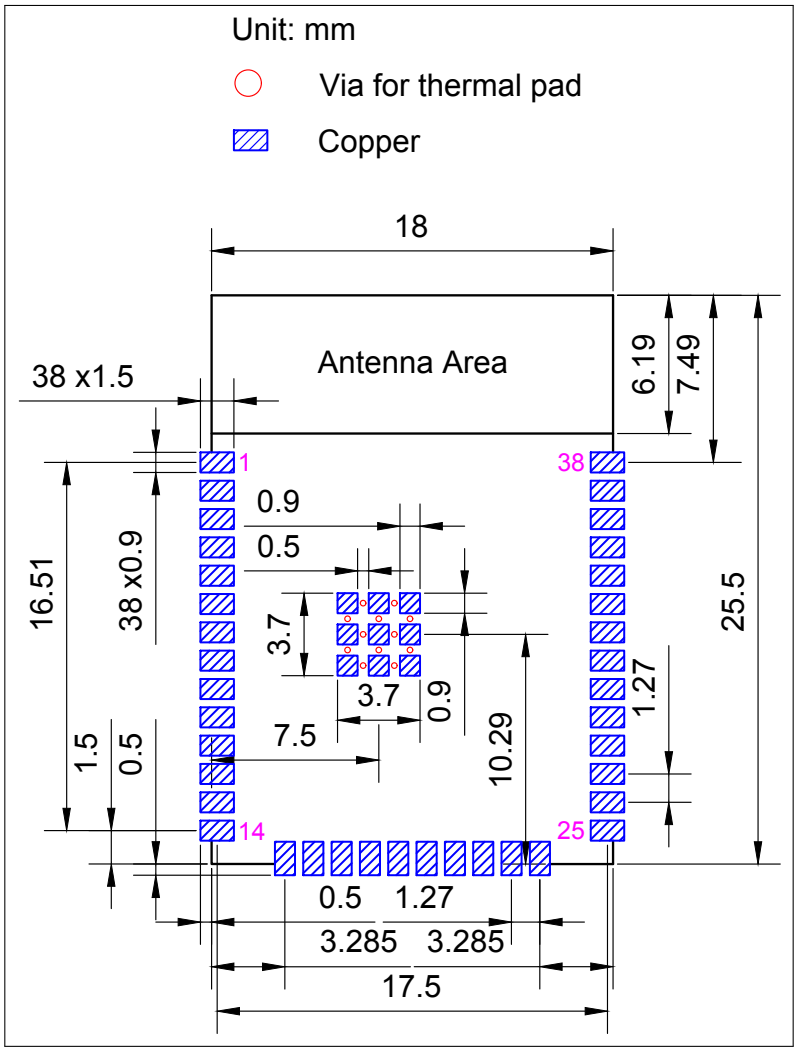

Figure 13: ESP32-WROOM-32E Recommended PCB Land Pattern

Downloaded from Arrow.com.

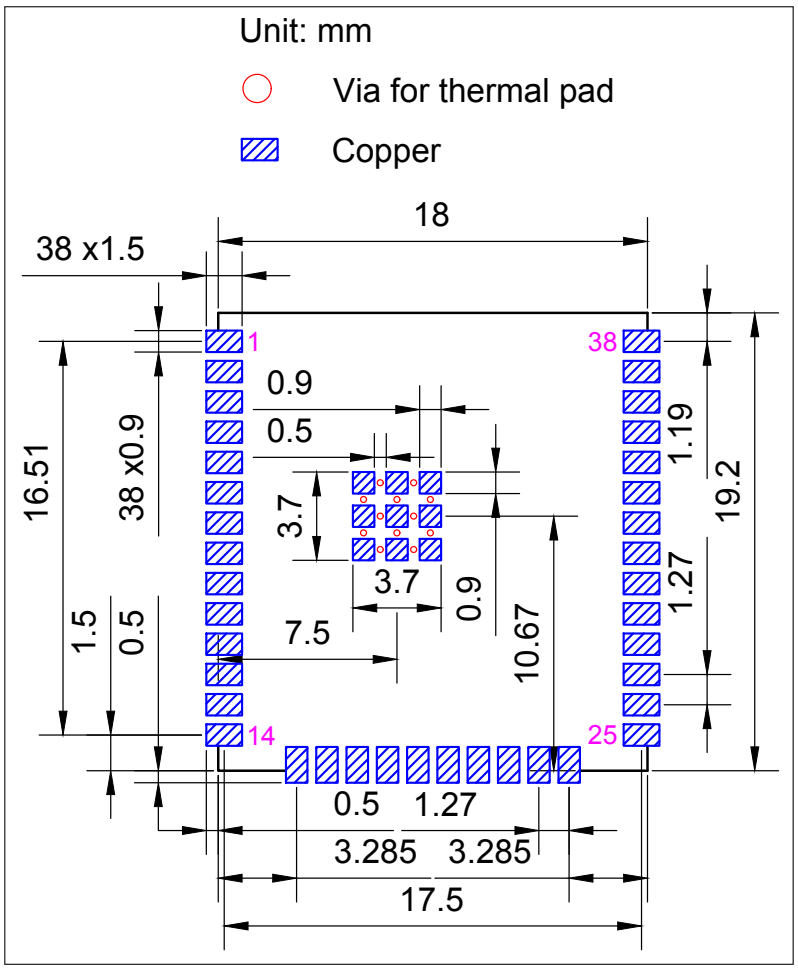

Figure 14: ESP32-WROOM-32UE Recommended PCB Land Pattern

Downloaded from Arrow.com.

11.2 Module Placement for PCB Design

If module-on-board design is adopted, attention should be paid while positioning the module on the base board. The interference of the base board on the module's antenna performance should be minimized.

For details about module placement for PCB design, please refer to *ESP32 Hardware Design Guidelines* > Section *Positioning a Module on a Base Board*.

Downloaded from Arrow.com.

12 Product Handling

12.1 Storage Conditions

The products sealed in moisture barrier bags (MBB) should be stored in a non-condensing atmospheric environment of < 40 °C and 90%RH. The module is rated at the moisture sensitivity level (MSL) of 3.

After unpacking, the module must be soldered within 168 hours with the factory conditions 25 ± 5 °C and 60 %RH. If the above conditions are not met, the module needs to be baked.

12.2 Electrostatic Discharge (ESD)

- Human body model (HBM): ±2000 V
- Charged-device model (CDM): ±500 V

12.3 Reflow Profile

Solder the module in a single reflow.

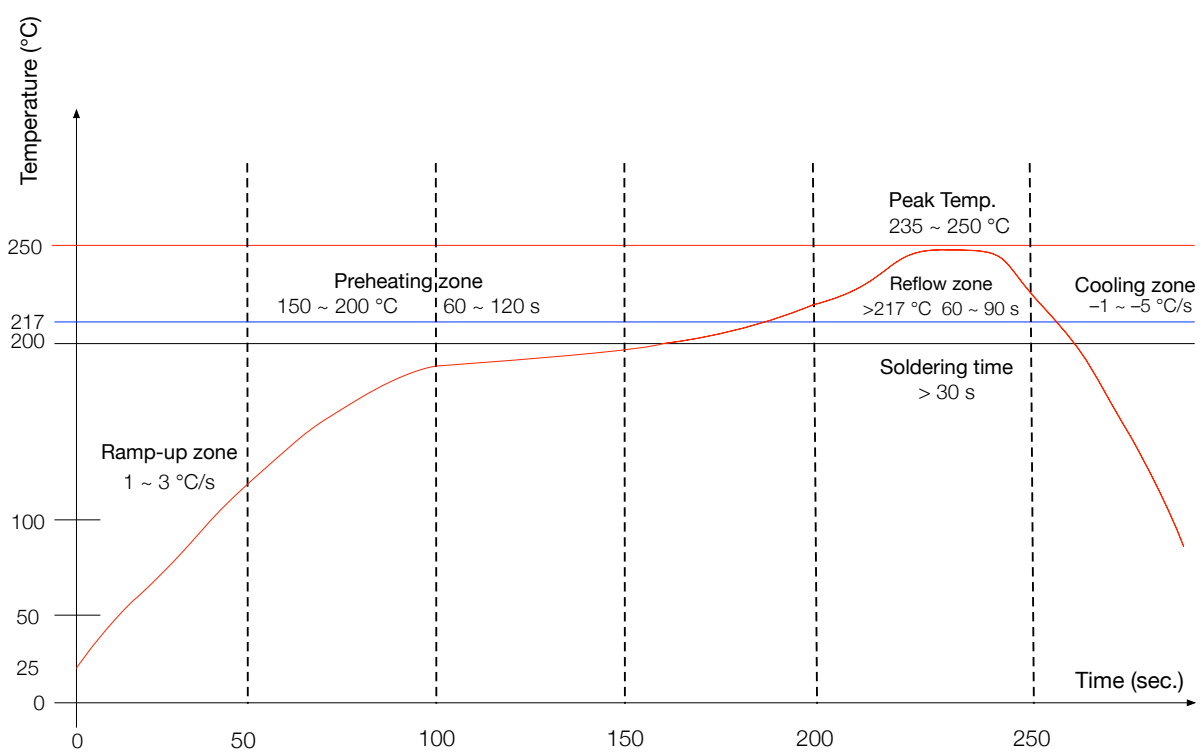

Ramp-up zone — Temp.: 25 ~ 150 °C Time: 60 ~ 90 s Ramp-up rate: 1 ~ 3 °C/s
Preheating zone — Temp.: 150 ~ 200 °C Time: 60 ~ 120 s
Reflow zone — Temp.: >217 °C Time: 60 ~ 90 s; Peak Temp.: 235 ~ 250 °C Time: 30 ~ 70 s
Cooling zone — Peak Temp. ~ 180 °C Ramp-down rate: −1 ~ −5 °C/s
Solder — Sn-Ag-Cu (SAC305) lead-free solder alloy

Figure 15: Reflow Profile

Downloaded from Arrow.com.

12.4 Ultrasonic Vibration

Avoid exposing Espressif modules to vibration from ultrasonic equipment, such as ultrasonic welders or ultrasonic cleaners. This vibration may induce resonance in the in-module crystal and lead to its malfunction or even failure. As a consequence, **the module may stop working or its performance may deteriorate**.

Downloaded from Arrow.com.

Datasheet Versioning

Datasheet Version	Status	Watermark	Definition
v0.1 ~ v0.5 (excluding v0.5)	Draft	Confidential	This datasheet is under development for products in the design stage. Specifications may change without prior notice.
v0.5 ~ v1.0 (excluding v1.0)	Preliminary release	Preliminary	This datasheet is actively updated for products in the verification stage. Specifications may change before mass production, and the changes will be documentation in the datasheet's Revision History.
v1.0 and higher	Official release	—	This datasheet is publicly released for products in mass production. Specifications are finalized, and major changes will be communicated via Product Change Notifications (PCN).
Any version	—	Not Recommended for New Design (NRND)[1]	This datasheet is updated less frequently for products not recommended for new designs.
Any version	—	End of Life (EOL)[2]	This datasheet is no longer mtained for products that have reached end of life.

[1] Watermark will be added to the datasheet title page only when all the product variants covered by this datasheet are not recommended for new designs.

[2] Watermark will be added to the datasheet title page only when all the product variants covered by this datasheet have reached end of life.

Downloaded from Arrow.com.

Related Documentation and Resources

Related Documentation

- ESP32 Series Datasheet – Specifications of the ESP32 hardware.
- ESP32 Technical Reference Manual – Detailed information on how to use the ESP32 memory and peripherals.
- ESP32 Hardware Design Guidelines – Guidelines on how to integrate the ESP32 into your hardware product.
- ESP32 ECO and Workarounds for Bugs – Correction of ESP32 design errors.
- ESP32 Series SoC Errata – Descriptions of known errors in ESP32 series of SoCs.
- *Certificates*
  https://espressif.com/en/support/documents/certificates
- *ESP32 Product/Process Change Notifications (PCN)*
  https://espressif.com/en/support/documents/pcns
- *ESP32 Advisories* – Information on security, bugs, compatibility, component reliability.
  https://espressif.com/en/support/documents/advisories
- *Documentation Updates and Update Notification Subscription*
  https://espressif.com/en/support/download/documents

Developer Zone

- ESP-IDF Programming Guide for ESP32 – Extensive documentation for the ESP-IDF development framework.
- *ESP-IDF* and other development frameworks on GitHub.
  https://github.com/espressif
- *ESP32 BBS Forum* – Engineer-to-Engineer (E2E) Community for Espressif products where you can post questions, share knowledge, explore ideas, and help solve problems with fellow engineers.
  https://esp32.com/
- *The ESP Journal* – Best Practices, Articles, and Notes from Espressif folks.
  https://blog.espressif.com/
- See the tabs *SDKs and Demos*, *Apps*, *Tools*, *AT Firmware*.
  https://espressif.com/en/support/download/sdks-demos

Products

- *ESP32 Series SoCs* – Browse through all ESP32 SoCs.
  https://espressif.com/en/products/socs?id=ESP32
- *ESP32 Series Modules* – Browse through all ESP32-based modules.
  https://espressif.com/en/products/modules?id=ESP32
- *ESP32 Series DevKits* – Browse through all ESP32-based devkits.
  https://espressif.com/en/products/devkits?id=ESP32
- *ESP Product Selector* – Find an Espressif hardware product suitable for your needs by comparing or applying filters.
  https://products.espressif.com/#/product-selector?language=en

Contact Us

- See the tabs *Sales Questions*, *Technical Enquiries*, *Circuit Schematic & PCB Design Review*, *Get Samples* (Online stores), *Become Our Supplier*, *Comments & Suggestions*.
  https://espressif.com/en/contact-us/sales-questions

Downloaded from Arrow.com.

Revision History

Date	Version	Release notes
2025-10-20	v2.0	• Section 2 *Block Diagram*: Added a note about pin mapping between the chip and the in-package flash/PSRAM • Updated Figure 4 *Visualization of Timing Parameters for the Strapping Pins* • Added Section 4.6 *Chip Power-up and Reset* • Table 15 *DC Characteristics (3.3 V, 25 °C)*: Added V_{IH_nRST} • Added Section 6.5 *Memory Specifications* • Added Section Datasheet Versioning
2025-07-15	v1.9	• Section 10.2 *Dimensions of External Antenna Connector*: Added the external antenna information for certification.
2025-04-14	v1.8	• Section 9 *Peripheral Schematics*: Added a note about UART
2024-09	v1.7	• Improved the wording and structure of following sections: – Updated Section "Strapping Pins" and renamed to 4 *Boot Configurations* – Added Chapter 5 *Peripherals* – Updated Table "Wi-Fi RF Standards" and renamed to Wi-Fi RF Characteristics – Added notes about erase cycles and retention time for flash in Table 2 *Series Comparison* – Updated note 1 in Chapter 9 *Peripheral Schematics*
2023-01-18	v1.6	• Major updates: – Removed contents about hall sensor according to PCN20221202 • Other updates: – Added source files of PCB land patterns and 3D models of the modules in Section 11.1 *PCB Land Pattern*
2022-07-20	v1.5	• Added module variants embedded with ESP32-D0WDR2-V3 chip • Added Table 1 *Series Comparison* and Table 2 *Series Comparison* • Added Figure 4 *Visualization of Timing Parameters for the Strapping Pins* and Table 5 *Description of Timing Parameters for the Strapping Pins* in Section 4 *Boot Configurations* • Updated Section 12 *Product Handling*
2022-02-22	v1.4	• Added a link to RF certificates in Section 1.1 *Features* • Fixed a pin name typo in Figure 9 *Peripheral Schematics*

Cont'd on next page

Downloaded from Arrow.com.

Cont'd from previous page

Date	Version	Release notes
2021-11-08	v1.3	• Added a 105 °C module variant • Updated Table 13 *Absolute Maximum Ratings* • Updated Table 14 *Recommended Operating Conditions* • Replaced Espressif Product Ordering Information with ESP Product Selector • Updated the description of TWAI in Section 1.1 *Features* • Added a note below Figure 11 *ESP32-WROOM-32UE Physical Dimensions* • Upgraded figure formatting • Upgraded document formatting
2021-02-09	v1.2	• Updated Figure 13 *ESP32-WROOM-32E Recommended PCB Land Pattern*, Figure 14 *ESP32-WROOM-32UE Recommended PCB Land Pattern*, Figure 10 *ESP32-WROOM-32E Physical Dimensions*, and Figure 11 *ESP32-WROOM-32UE Physical Dimensions* • Modified the note below Figure 15 *Reflow Profile* • Updated the trade mark from TWAI™ to TWAI®
2020-11-02	v1.1	• Updated the table 16 *Current Consumption Depending on RF Modes* • Added a note to EPAD in Section 11.1 *PCB Land Pattern* • Updated the note to RC circuit in Section 9 *Peripheral Schematics*
2020-05-29	v1.0	Official release
2020-05-18	v0.5	Preliminary release

Downloaded from Arrow.com.

Disclaimer and Copyright Notice

Information in this document, including URL references, is subject to change without notice.

ALL THIRD PARTY'S INFORMATION IN THIS DOCUMENT IS PROVIDED AS IS WITH NO WARRANTIES TO ITS AUTHENTICITY AND ACCURACY.

NO WARRANTY IS PROVIDED TO THIS DOCUMENT FOR ITS MERCHANTABILITY, NON-INFRINGEMENT, FITNESS FOR ANY PARTICULAR PURPOSE, NOR DOES ANY WARRANTY OTHERWISE ARISING OUT OF ANY PROPOSAL, SPECIFICATION OR SAMPLE.

All liability, including liability for infringement of any proprietary rights, relating to use of information in this document is disclaimed. No licenses express or implied, by estoppel or otherwise, to any intellectual property rights are granted herein.

The Wi-Fi Alliance Member logo is a trademark of the Wi-Fi Alliance. The Bluetooth logo is a registered trademark of Bluetooth SIG.

All trade names, trademarks and registered trademarks mentioned in this document are property of their respective owners, and are hereby acknowledged.

Copyright © 2025 Espressif Systems (Shanghai) Co., Ltd. All rights reserved.

www.espressif.com

Downloaded from Arrow.com.