We connect and protect

# CompacPRO Desktop Case, Unshielded, 3 U, 63 HP, 331 mm

## CATALOG NUMBER

**14575-145**

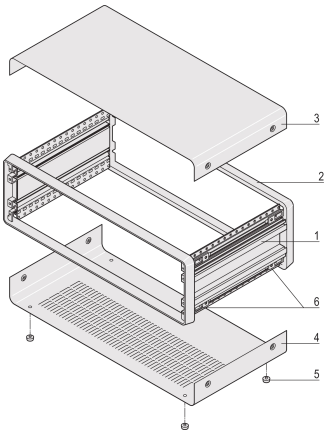


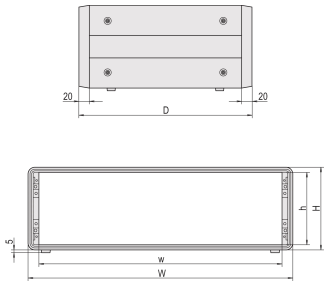


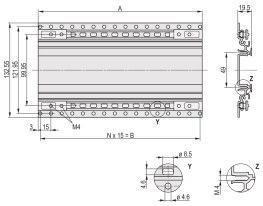

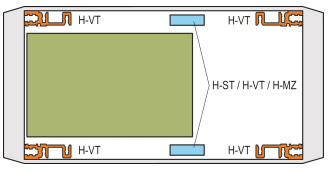


The nVent SCHROFF CompacPRO case provides electronics protection for 19" and individual electronic assemblies. The aluminum die cast frame and profile sidepanels guarantee a robust solution. In addition an extensive accessory range is available.

## CERTIFICATIONS

RoHS COMPLIANT

## FEATURES

- Desktop case for individual assembly
- Aluminum construction ensures robust solution
- International dimensions in accordance with IEC 6297-3-101

Downloaded from Arrow.com.

| |
|---|
| Side panel with integrated handle function |
| Front and rear identical, depth-symmetrical construction |
| Ventilation slots in base plate |
| IP 20 in accordance with IEC 60529 |

## PRODUCT ATTRIBUTES

| |
|---|
| Rack Height: 3U |
| Rack Width: 63HP |
| Package Quantity: 1 |
| Front Frame Construction: Single Piece |
| Cooling Option: No |
| Complies With: IEC 60297-3-103 |
| EMC Shielding: No |
| Finish: Powder Coated |
| Material: Aluminum |
| Product Family: CompacPRO |
| Product Type: Case |
| Protection Rating: IP20 |
| Type: Case for Individual Electronic Components |
| Net Weight: 3.1kg |

## ADDITIONAL PRODUCT DETAILS

GND / earthing connections in accordance with

## WARNING

nVent products shall be installed and used only as indicated in nVent's product instruction sheets and training materials. Instruction sheets are available at www.nvent.com and from your nVent customer service representative. Improper installation, misuse, misapplication or other failure to completely follow nVent's instructions and warnings may cause product malfunction, property damage, serious bodily injury and death and/or void your warranty.



Downloaded from Arrow.com.

**North America**
All locations
+1.763.422.2661
Chat with us:
nvent.com/schroff

**Europe**
Straubenhardt, Germany
+49.7082.794.0
Betschdorf, France
+33.3.88.90.64.90
Warsaw, Poland
+48.22.209.98.35
Assago, Italy
+39.02.932.7141
Chat with us:
nvent.com/schroff

**Asia**
Shanghai, China
+86.21.2412.6943
Qingdao, China
+86.532.8771.6101
Singapore
+65.6768.5800
Shin-Yokohama, Japan
+81.45.476.0271
Chat with us:
nvent.com/schroff

**Middle East & India**
Dubai, United Arab Emirates
+971.4.378.1700
Bangalore, India
+91.80.6715.2001
Istanbul, Turkey
+90.216.250.7374
Chat with us:
nvent.com/schroff

Our powerful portfolio of brands:

**CADDY ERICO HOFFMAN ILSCO SCHROFF TRACHTE**

©2026 nVent. All nVent marks and logos are owned or licensed by nVent Services GmbH or its affiliates. All other trademarks are the property of their respective owners. nVent reserves the right to change specifications without notice.

This document is system-generated.



Downloaded from Arrow.com.