PART NAME	UTILIBOX (STYLE E)	PART No.	CU-795-MB

MATERIAL: ABS THERMOPLASTIC (FLAMMABILITY RATING OF 94-V0 AT 0.070" THICKNESS AND CONTINUOUS USE TEMPERATURE OF 70° C.)

FINISH:
BODY - OUTSIDE SURFACES ARE TEXTURED FINISH WITH TEXTURED INSERT AREA.
COVER - SURFACES ARE SMOOTH.

COLOR: BLACK

COVER REDUCES INSIDE HEIGHT BY 0.085.

LENGTH AND WIDTH DIMENSIONS ARE TAKEN FROM CLOSED END OF THE BOX. DIMENSIONS INCREASE SLIGHTLY AT OPEN END DUE TO TAPER.

FOUR (4) #4 x 1/2 LG. SELF THREADING SCREWS WITH HI/LOW THREADS ARE SUPPLIED FOR MOUNTING COVER.

NOTE: ALL DIMENSIONS HAVE ±0.010 TOLERANCE UNLESS OTHERWISE SPECIFIED.

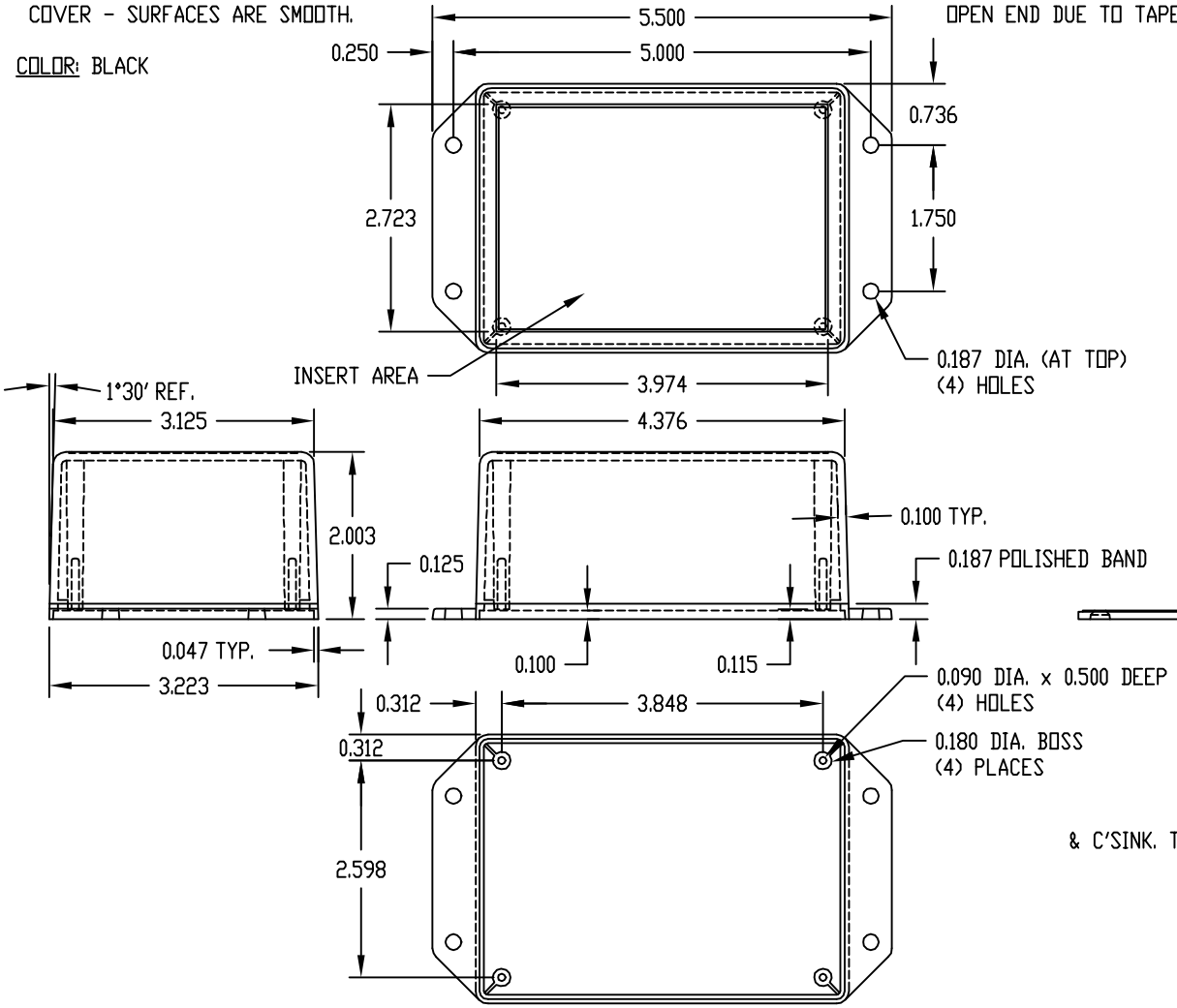

BODY

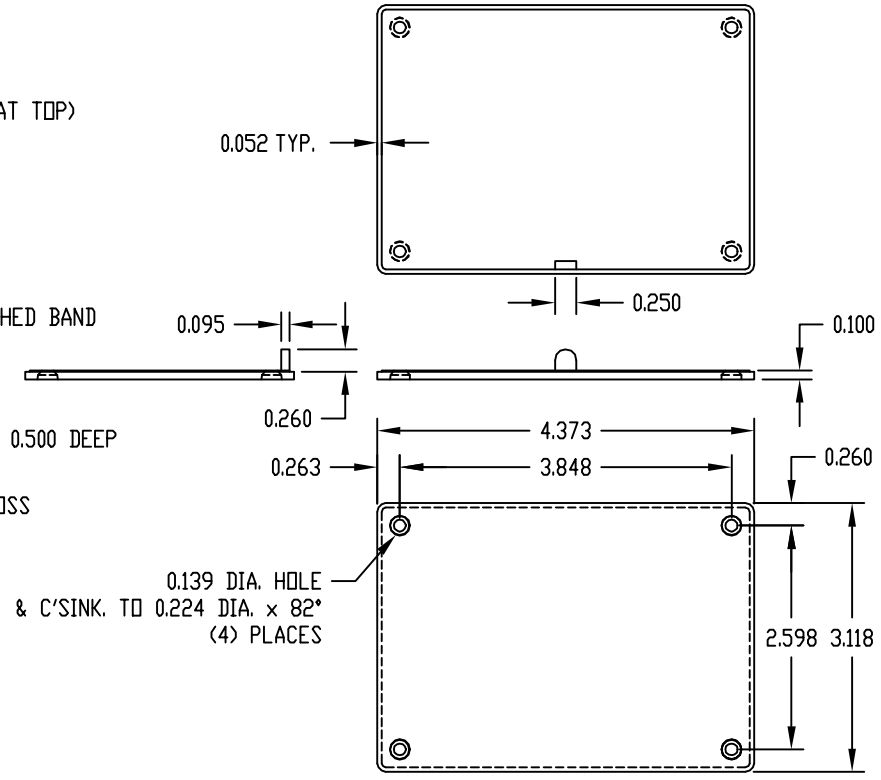

COVER

Downloaded from Arrow.com.