NHD-0216HZ-FSW-FBW-33V3C

Character Liquid Crystal Display Module

NHD-	Newhaven Display
0216-	2 Lines x 16 Characters
HZ-	Model
F-	Transflective
SW-	Side White LED Backlight
F-	FSTN (+)
B-	Optimal 6:00 View
W-	Wide Temperature
33V3-	3.3 VDD, 3 Volt Backlight
C-	Temperature Compensation Circuit
	RoHS Compliant

Newhaven Display International, Inc.

2511 Technology Drive, Suite 101

Elgin IL, 60124

Ph: 847-844-8795 Fax: 847-844-8796

www.newhavendisplay.com

nhtech@newhavendisplay.com nhsales@newhavendisplay.com

Downloaded from Arrow.com.

Document Revision History

Revision	Date	Description	Changed by
0	10/31/2011	33V – improved liquid; VDD = 3.3V	SB
1	11/07/2013	Datasheet reformatted	ML

Functions and Features

- **2 lines x 16 characters**
- **Built-in controller (ST7066U or equivalent)**
- **+3.3V Power Supply**
- **1/16 duty, 1/5 bias**
- **RoHS compliant**

Downloaded from Arrow.com.

Mechanical Drawing

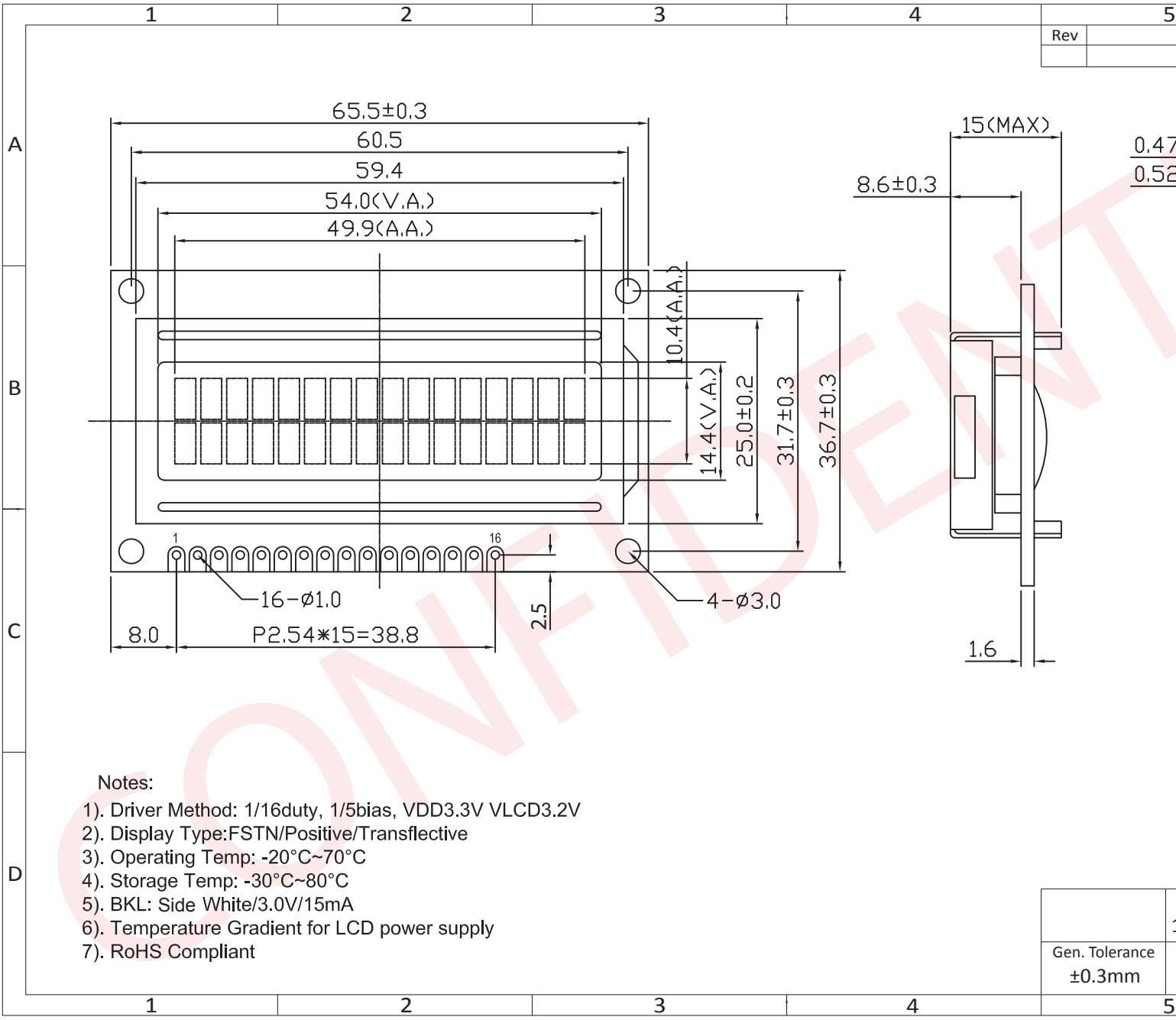

Notes:

1). Driver Method: 1/16duty, 1/5bias, VDD3.3V VLCD3.2V
2). Display Type:FSTN/Positive/Transflective
3). Operating Temp: -20°C~70°C
4). Storage Temp: -30°C~80°C
5). BKL: Side White/3.0V/15mA
6). Temperature Gradient for LCD power supply
7). RoHS Compliant

CONFIDENT

The drawing contained herein is the exclusive property of Newhaven Display International, Inc. and shall not be copied, reproduced, and/or disc

Downloaded from Arrow.com.

Pin Description and Wiring Diagram

Pin No.	Symbol	External Connection	Function Description
1	VSS	Power Supply	Ground
2	VDD	Power Supply	Supply Voltage for LCD and Logic (+3.3V)
3	NC	NC	No Connect
4	RS	MPU	Register Select signal. RS=0: Command, RS=1: Data
5	R/W	MPU	Read/Write select signal. R/W=1: Read, R/W=0: Write
6	E	MPU	Operation Enable signal. Falling edge triggered.
7-10	DB0 – DB3	MPU	Four low order bi-directional three-state data bus lines. These four are not used during 4-bit operation.
11-14	DB4 – DB7	MPU	Four high order bi-directional three-state data bus lines.
15	LED+	Power Supply	Backlight Anode (+3.0V)
16	LED-	Power Supply	Backlight Cathode (Ground)

Recommended LCD connector: 2.54mm pitch pins
Backlight connector: --- **Mates with:** ---

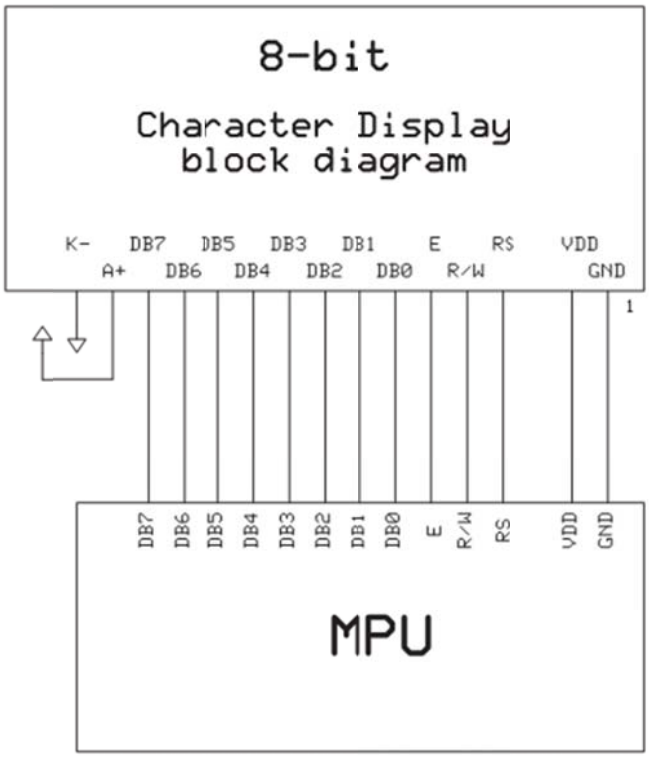

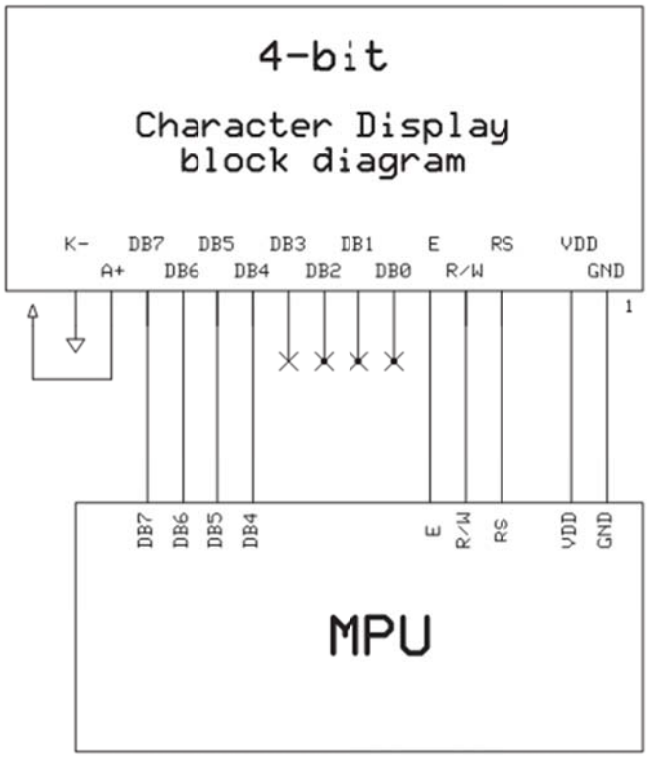

Downloaded from Arrow.com.

Electrical Characteristics

Item	Symbol	Condition	Min.	Typ.	Max.	Unit
Operating Temperature Range	Top	Absolute Max	-20	-	+70	ºC
Storage Temperature Range	Tst	Absolute Max	-30	-	+80	ºC
Supply Voltage	VDD		-	3.3	-	V
Supply Current	IDD	Ta=25°C, VDD=3.3V	-	1.5	2.5	mA
Supply for LCD (contrast)	VDD-V0	Ta=25°C	-	3.2	-	V
"H" Level input	Vih		0.7*VDD	-	VDD	V
"L" Level input	Vil		0	-	0.6	V
"H" Level output	Voh		0.75*VDD	-	-	V
"L" Level output	Vol		-	-	0.2*VDD	V
Backlight Supply Voltage	Vled	-	-	3.0		V
Backlight Supply Current	Iled	Vled=3.0V	-	15	-	mA

Optical Characteristics

Item	Symbol	Condition	Min.	Typ.	Max.	Unit
Viewing Angle – Top	-	Cr ≥ 3	-	20	-	º
Viewing Angle – Bottom	-		-	50	-	º
Viewing Angle – Left	-		-	30	-	º
Viewing Angle – Right	-		-	30	-	º
Contrast Ratio	Cr		3	5	-	-
Response Time (rise)	Tr	-	-	150	250	ms
Response Time (fall)	Tf	-	-	150	250	ms

Controller Information

Built-in ST7066U controller.
Please download specification at http://www.newhavendisplay.com/app_notes/ST7066U.pdf

DDRAM Address

1	2	3	4	5	6	7	8	9	10	11	12	13	14	15	16
00	01	02	03	04	05	06	07	08	09	0A	0B	0C	0D	0E	0F
40	41	42	43	44	45	46	47	48	49	4A	4B	4C	4D	4E	4F

Downloaded from Arrow.com.

Table of Commands

Instruction	Instruction code										Description	Execution time (fosc= 270 KHZ
	RS	R/W	DB7	DB6	DB5	DB4	DB3	DB2	DB1	DB0		
Clear Display	0	0	0	0	0	0	0	0	0	1	Write “20H” to DDRA and set DDRAM address to “00H” from AC	1.53ms
Return Home	0	0	0	0	0	0	0	0	1	-	Set DDRAM address to “00H” From AC and return cursor to Its original position if shifted. The contents of DDRAM are not changed.	1.53ms
Entry mode Set	0	0	0	0	0	0	0	1	I/D	SH	Assign cursor moving direction And blinking of entire display	39us
Display ON/ OFF control	0	0	0	0	0	0	1	D	C	B	Set display (D), cursor (C), and Blinking of cursor (B) on/off Control bit.	
Cursor or Display shift	0	0	0	0	0	1	S/C	R/L	-	-	Set cursor moving and display Shift control bit, and the Direction, without changing of DDRAM data.	39us
Function set	0	0	0	0	1	DL	N	F	-	-	Set interface data length (DL: 8-Bit/4-bit), numbers of display Line (N: =2-line/1-line) and, Display font type (F: 5x11/5x8)	39us
Set CGRAM Address	0	0	0	1	AC5	AC4	AC3	AC2	AC1	AC0	Set CGRAM address in address counter.	39us
Set DDRAM Address	0	0	1	AC6	AC5	AC4	AC3	AC2	AC1	AC0	Set DDRAM address in address counter.	39us
Read busy Flag and Address	0	1	BF	AC6	AC5	AC4	AC3	AC2	AC1	AC0	Whether during internal Operation or not can be known By reading BF. The contents of Address counter can also be read.	0us
Write data To Address	1	0	D7	D6	D5	D4	D3	D2	D1	D0	Write data into internal RAM (DDRAM/CGRAM).	43us
Read data From RAM	1	1	D7	D6	D5	D4	D3	D2	D1	D0	Read data from internal RAM (DDRAM/CGRAM).	43us

Downloaded from Arrow.com.

Timing Characteristics

Writing data from MPU to ST7066U

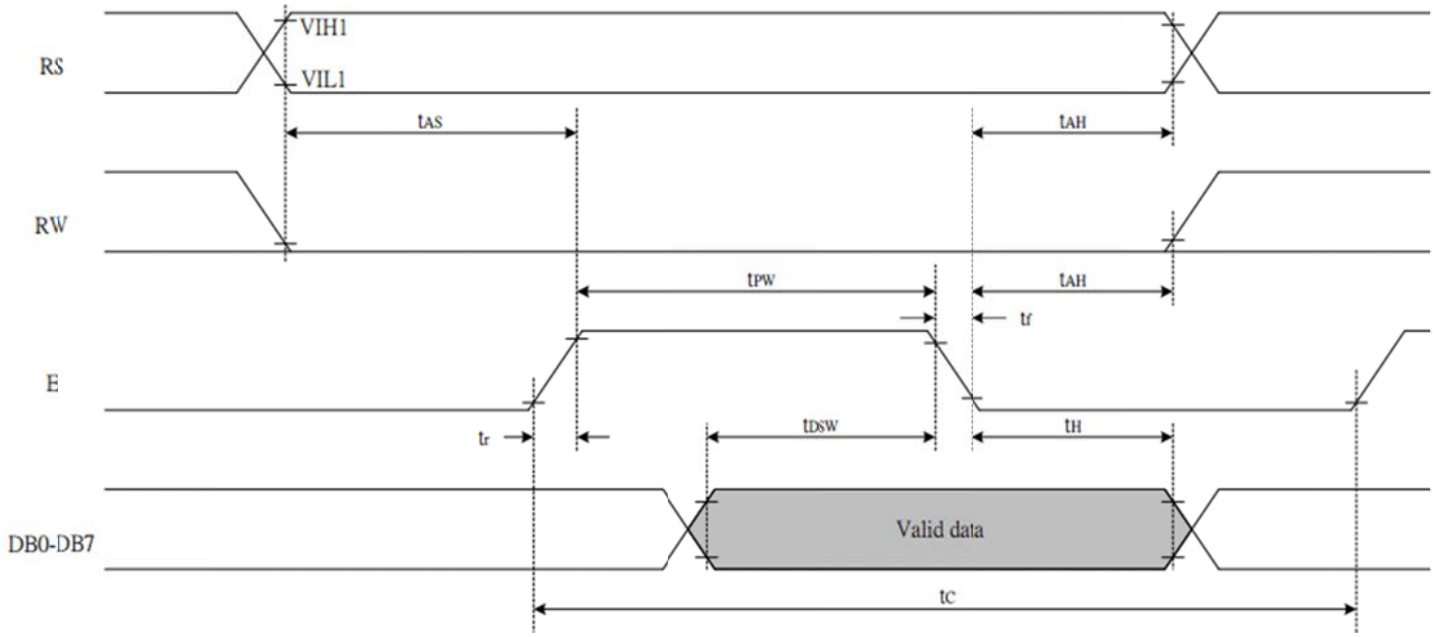

Reading data from ST7066U to MPU

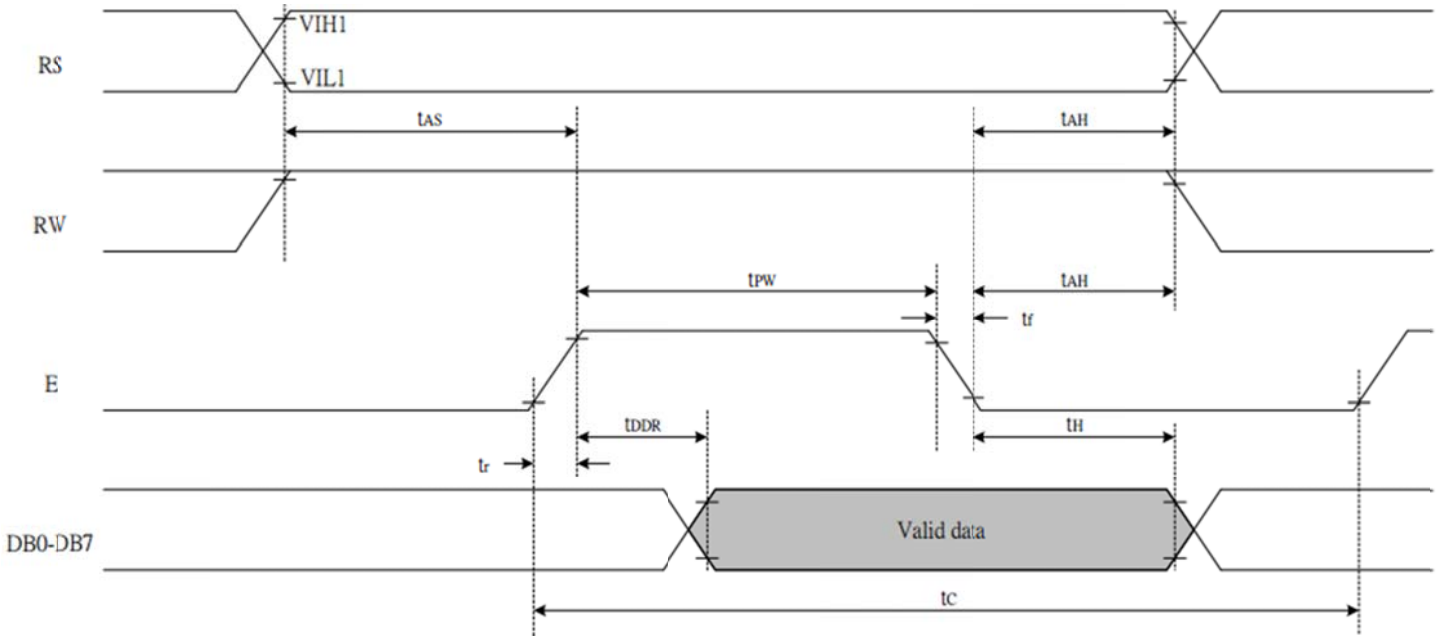

Downloaded from Arrow.com.

Symbol	Characteristics	Test Condition	Min.	Typ.	Max.	Unit
Internal Clock Operation						
f_{OSC}	OSC Frequency	R = 75KΩ	190	270	350	KHz
External Clock Operation						
f_{EX}	External Frequency	-	125	270	410	KHz
	Duty Cycle	-	45	50	55	%
T_R, T_F	Rise/Fall Time	-	-	-	0.2	μs
Write Mode (Writing data from MPU to ST7066U)						
T_C	Enable Cycle Time	Pin E	1200	-	-	ns
T_{PW}	Enable Pulse Width	Pin E	460	-	-	ns
T_R, T_F	Enable Rise/Fall Time	Pin E	-	-	25	ns
T_{AS}	Address Setup Time	Pins: RS,RW,E	0	-	-	ns
T_{AH}	Address Hold Time	Pins: RS,RW,E	10	-	-	ns
T_{DSW}	Data Setup Time	Pins: DB0 - DB7	80	-	-	ns
T_H	Data Hold Time	Pins: DB0 - DB7	10	-	-	ns
Read Mode (Reading Data from ST7066U to MPU)						
T_C	Enable Cycle Time	Pin E	1200	-	-	ns
T_{PW}	Enable Pulse Width	Pin E	480	-	-	ns
T_R, T_F	Enable Rise/Fall Time	Pin E	-	-	25	ns
T_{AS}	Address Setup Time	Pins: RS,RW,E	0	-	-	ns
T_{AH}	Address Hold Time	Pins: RS,RW,E	10	-	-	ns
T_{DDR}	Data Setup Time	Pins: DB0 - DB7	-	-	320	ns
T_H	Data Hold Time	Pins: DB0 - DB7	10	-	-	ns
Interface Mode with LCD Driver(ST7065)						
T_{CWH}	Clock Pulse with High	Pins: CL1, CL2	800	-	-	ns
T_{CWL}	Clock Pulse with Low	Pins: CL1, CL2	800	-	-	ns
T_{CST}	Clock Setup Time	Pins: CL1, CL2	500	-	-	ns
T_{SU}	Data Setup Time	Pin: D	300	-	-	ns
T_{DH}	Data Hold Time	Pin: D	300	-	-	ns
T_{DM}	M Delay Time	Pin: M	0	-	2000	ns

Downloaded from Arrow.com.

Built-in Font Table

Lower 4 Bits \ Upper 4 Bits	0000	0001	0010	0011	0100	0101	0110	0111	1000	1001	1010	1011	1100	1101	1110	1111
xxxx0000	CG RAM (1)			0	@	P	`	p				ー	タ	ミ	α	p
xxxx0001	(2)		!	1	A	Q	a	q			。	ア	チ	ム	ä	q
xxxx0010	(3)		"	2	B	R	b	r			「	イ	ツ	メ	ß	θ
xxxx0011	(4)		#	3	C	S	c	s			」	ウ	テ	モ	ε	∞
xxxx0100	(5)		$	4	D	T	d	t			、	エ	ト	ヤ	μ	Ω
xxxx0101	(6)		%	5	E	U	e	u			・	オ	ナ	ユ	σ	ü
xxxx0110	(7)		&	6	F	V	f	v			ヲ	カ	ニ	ヨ	ρ	Σ
xxxx0111	(8)		'	7	G	W	g	w			ァ	キ	ヌ	ラ	g	π
xxxx1000	(1)		(	8	H	X	h	x			ィ	ク	ネ	リ	√	x̄
xxxx1001	(2)		)	9	I	Y	i	y			ゥ	ケ	ノ	ル	¹	y
xxxx1010	(3)		*	:	J	Z	j	z			ェ	コ	ハ	レ	j	¥
xxxx1011	(4)		+	;	K	[	k	{			ォ	サ	ヒ	ロ	×	万
xxxx1100	(5)		,	<	L	¥	l	|			ャ	シ	フ	ワ	¢	円
xxxx1101	(6)		−	=	M	]	m	}			ュ	ス	ヘ	ン	£	÷
xxxx1110	(7)		.	>	N	^	n	→			ョ	セ	ホ	゛	ñ	
xxxx1111	(8)		/	?	O	_	o	←			ッ	ソ	マ	゜	ö	▉

Downloaded from Arrow.com.

Example Initialization Program

8-bit Initialization:

```
/*********************************************************/
void command(char i)
{
      P1 = i;                       //put data on output Port
      D_I =0;                       //D/I=LOW : send instruction
      R_W =0;                       //R/W=LOW : Write
      E  = 1;
      Delay(1);                     //enable pulse width  >= 300ns
        E  = 0;                     //Clock enable: falling edge
}
/*********************************************************/
void write(char i)
{
      P1 = i;                       //put data on output Port
      D_I =1;                       //D/I=LOW : send data
      R_W =0;                       //R/W=LOW : Write
      E  = 1;
      Delay(1);                     //enable pulse width  >= 300ns
      E  = 0;                       //Clock enable: falling edge
}
/*********************************************************/
void init()
{
      E = 0;
      Delay(100);                   //Wait >15 msec after power is applied
      command(0x30);                //command 0x30 = Wake up
      Delay(30);                    //must wait 5ms, busy flag not available
      command(0x30);                //command 0x30 = Wake up #2
      Delay(10);                    //must wait 160us, busy flag not available
      command(0x30);                //command 0x30 = Wake up #3
      Delay(10);                    //must wait 160us, busy flag not available
      command(0x38);                //Function set: 8-bit/2-line
      command(0x10);                //Set cursor
      command(0x0c);                //Display ON; Cursor ON
      command(0x06);                //Entry mode set
}
/*********************************************************/
```


Downloaded from Arrow.com.

4-bit Initialization:

```
/*********************************************************/
void command(char i)
{
      P1 = i;                       //put data on output Port
      D_I =0;                       //D/I=LOW : send instruction
      R_W =0;                       //R/W=LOW : Write
      Nybble();                     //Send lower 4 bits
      i = i<<4;                     //Shift over by 4 bits
      P1 = i;                       //put data on output Port
      Nybble();                     //Send upper 4 bits
}
/*********************************************************/
void write(char i)
{
      P1 = i;                       //put data on output Port
      D_I =1;                       //D/I=HIGH : send data
      R_W =0;                       //R/W=LOW : Write
      Nybble();                     //Clock lower 4 bits
      i = i<<4;                     //Shift over by 4 bits
      P1 = i;                       //put data on output Port
      Nybble();                     //Clock upper 4 bits
}
/*********************************************************/
void Nybble()
{
      E = 1;
      Delay(1);                     //enable pulse width  >= 300ns
      E = 0;                        //Clock enable: falling edge
}
/*********************************************************/
void init()
{
      P1 = 0;
      P3 = 0;
      Delay(100);                   //Wait >15 msec after power is applied
      P1 = 0x30;                    //put 0x30 on the output port
      Delay(30);                    //must wait 5ms, busy flag not available
      Nybble();                     //command 0x30 = Wake up
      Delay(10);                    //must wait 160us, busy flag not available
      Nybble();                     //command 0x30 = Wake up #2
      Delay(10);                    //must wait 160us, busy flag not available
      Nybble();                     //command 0x30 = Wake up #3
      Delay(10);                    //can check busy flag now instead of delay
      P1= 0x20;                     //put 0x20 on the output port
      Nybble();                     //Function set: 4-bit interface
      command(0x28);                //Function set: 4-bit/2-line
      command(0x10);                //Set cursor
      command(0x0F);                //Display ON; Blinking cursor
      command(0x06);                //Entry Mode set
}
/*********************************************************/
```


Downloaded from Arrow.com.

Quality Information

Test Item	Content of Test	Test Condition	Note
High Temperature storage	Endurance test applying the high storage temperature for a long time.	+80°C , 96hrs	2
Low Temperature storage	Endurance test applying the low storage temperature for a long time.	-30°C , 96hrs	1,2
High Temperature Operation	Endurance test applying the electric stress (voltage & current) and the high thermal stress for a long time.	+70°C, 96hrs	2
Low Temperature Operation	Endurance test applying the electric stress (voltage & current) and the low thermal stress for a long time.	-20°C , 96hrs	1,2
High Temperature / Humidity Operation	Endurance test applying the electric stress (voltage & current) and the high thermal with high humidity stress for a long time.	+40°C , 90% RH , 96hrs	1,2
Thermal Shock resistance	Endurance test applying the electric stress (voltage & current) during a cycle of low and high thermal stress.	0°C,30min -> 25°C,5min -> 50°C,30min = 1 cycle 10 cycles	
Vibration test	Endurance test applying vibration to simulate transportation and use.	10-55Hz , 15mm amplitude. 60 sec in each of 3 directions X,Y,Z For 15 minutes	3
Static electricity test	Endurance test applying electric static discharge.	VS=800V, RS=1.5kΩ, CS=100pF One time	

Note 1: No condensation to be observed.
Note 2: Conducted after 4 hours of storage at 25°C, 0%RH.
Note 3: Test performed on product itself, not inside a container.

Precautions for using LCDs/LCMs

See Precautions at www.newhavendisplay.com/specs/precautions.pdf

Warranty Information

See Terms and Conditions at http://www.newhavendisplay.com/index.php?main_page=terms

Downloaded from Arrow.com.