PRODUCT NUMBER: 2551-4-00-01-00-00-07-0

www.mill-max.com
DATA SHEET

2551-X-00-XX-00-00-07-0
Swage mount in .094 hole

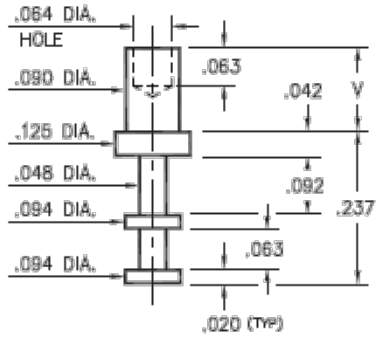

Basic Part Number	Board Thickness	Length V
2551-1	.031	.075
2551-2	.062	.105
2551-3	.094	.135
2551-4	.125	.165

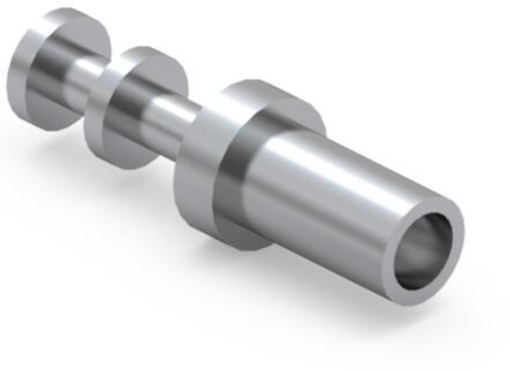

2551-4-00-01-00-00-07-0 SPECIFICATIONS

General Info	
Description[1]:	Turret Terminal Pin
Mounting Feature:	Swage Mount
Mounting Hole:	.094" (2,388mm)
Packaging:	Packaged in Bulk
RoHS:	No
Product Lifecycle[2]:	Active
Country Of Origin:	USA

Materials	
Shell Material[3]:	Brass Alloy
Shell Plating[4]:	200 - 300 µ" Tin/Lead over Nickel

Technical Specs	
Operating Temperature Range[5]:	- 55/+125° C
Maximum Current:	Application Specific

(c)2025 Mill-Max Mfg Corp. | 516-922-6000
190 Pine Hollow Road, Oyster Bay, NY 11771

Downloaded from Arrow.com.

NOTES:

1. Standard Tolerances:
   Lengths +/-.005" (0,13)
   Diameters: +/-.002" (0,051)
   Angles: +/- 2°
2. Part is Active and in Production, No Scheduled Obsolescence
3. Brass Alloy 360 per ASTM B 16, or 385 per ASTM B455
4. TIN/LEAD (93/7) per ASTM B 545 (Appendix X6.3.2.5 to eliminate whisker growth) Bright finish; NICKEL per ASTM B 689, Type 2 (Bright)
5. Per IEC 60512-11-(4,-9,-10,-12)

ADDITIONAL NOTES AND SPECIFICATIONS

In the interest of improved design, quality and performance , Mill-Max reserves the right to make changes in its specifications without prior notice. Specifications and tolerances are provided wherever possible. The tolerance on dimensions of critical to function features is typically held tighter than the stated standard tolerances, such as press-fits, holes and lengths affecting the coplanarity of SMT products. Due to the wide variety of interconnects Mill-Max offers, the specific tolerances vary from product to product. If you need information regarding the tolerance of a particular part, please contact Technical Services.

RELATED LINKS AND DOCUMENTS

- Engineering Notebook: **Introduction to Swage Assembly**
- Engineering Notebook: **Introduction to Printed Circuit Board PCB Pins**
- Environmental Compliance: https://www.mill-max.com/rohs

(c)2025 Mill-Max Mfg Corp. | 516-922-6000
190 Pine Hollow Road, Oyster Bay, NY 11771

Downloaded from Arrow.com.