IP68 Protected DC Fan with PWM and Tach Output

17250VE-48R (0-Type)

General Specifications

Motor Type:
DC Brushless Motor
Motor Protection:
Auto Restart / Polarity Protection (Motor withstands reverse connection for positive and negative leads.)
Insulation Resistance:
10MΩ or over with a DC 500V Megger
Dielectric Withstand Voltage:
AC 500V 1min or AC 700V 1sec
Allowable Ambient Temperature Range:
-10˚C ~ + 70˚C (Operating)
-40˚C ~ + 70˚C (Storage)
(non-condensing environment)



For reference only. Please see fan outline for details

Characteristic Curves

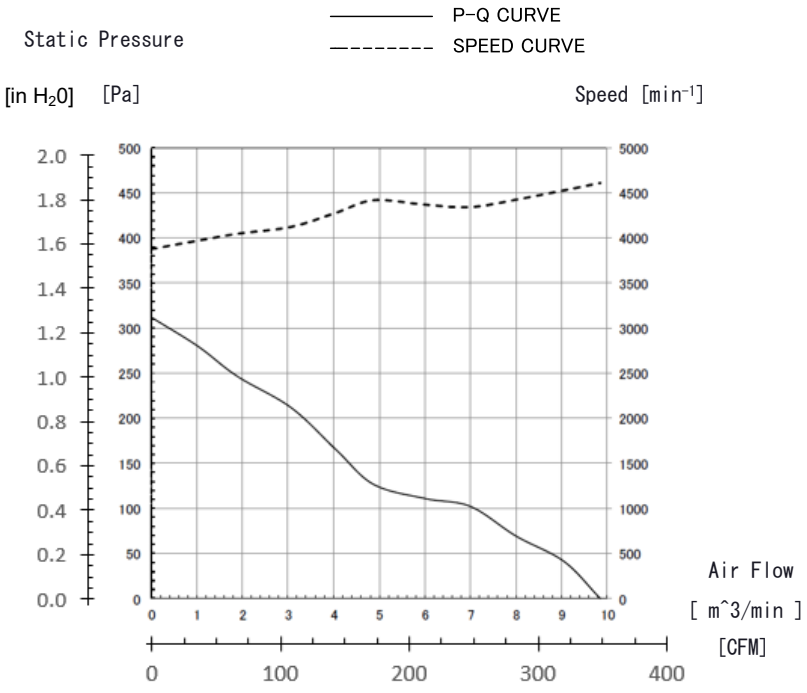

Features

- DC axial fan with outstanding P-Q performance, IP68 protection, PWM speed control, and tach output
- Vertically integrated manufacturing, with key components made in-house
- IP68 with highest level of protection from water/dust ingress and GR-487 salt fog compliant
- Outfitted with NMB precision machined stainless steel ball bearings for long life
- Ideal for applications such as EV chargers, PV inverters, telecom cabinets, small cell 5G network and many other outdoor applications

Life Expectancy L10

100,000 Hours at 25 Celsius

Fan life expectation is based on free air operation at 25°C, rated voltage, and indoor benign lab environment

*1: Values in Free Air

Specifications

MODEL	Rating Voltage	Operating Voltage	Current		Input Power		Speed	Max. Air Flow		Max. Static Pressure		Noise	Mass
			Avg	Max	Avg	Max							
	(V)	(V)	(A)*1	(A)*1	(W)*1	(W)*1	(min-1)*1	(CFM)	(m3/min)	(in H2O)	(Pa)	(dB)*1	(g)
17250VE-48R-GU-01	48	38.0 to 52.8	0.90	1.10	43.20	52.80	4,600	346	9.8	1.25	312	62	950

Downloaded from Arrow.com.

IP68 Protected DC Fan with PWM and Tach Output

17250VE-48R (0-Type)

PWM Specifications

Connection

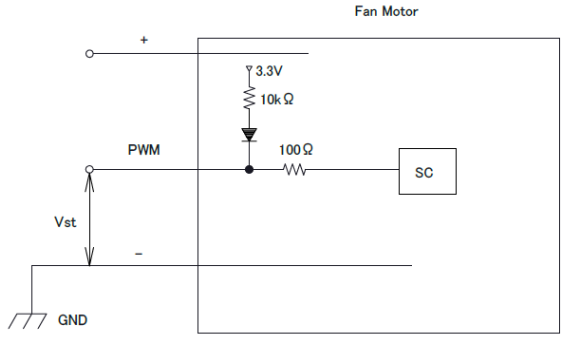

1. PWM Control
   Vst = Low Level (0V~0.4V) → Stop (On Duty 0%)
   Vst = High Level (4.0V~5.0V) → Full Speed (On Duty 100%)
   Vst = Open → Full Speed

2. PWM Duty & PWM Input Pulse

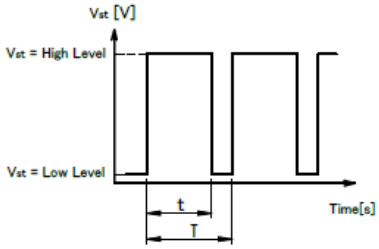

PWM Duty means that a ratio of high level time (t)/PWM Input Pulse(T).

(t/T) × 100 : On Duty 0%~100%

PWM Frequency f = 25[kHz]

3. The condition for PWM control are as follows

- When you use this under PWM control, always be sure the motor's operation under practical mounting state. Fan motor may not start up caused by PWM control at very low speed condition.
- To run at Rating Voltage
- Please use the start with Duty 20% or more at 25kHz.[At rated voltage input, Ambient temperature 25℃]

PWM Characteristic Curve

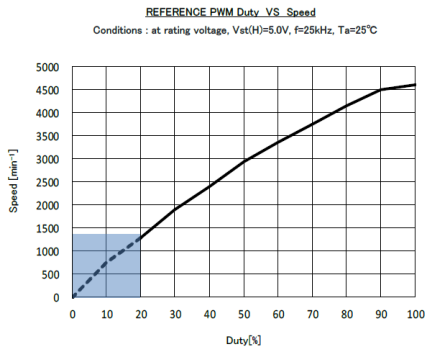

TACHO Specifications

Tachometer Signal

1. Output Circuit: Open Collector
2. Specification
   Absolute Maximum Ratings at Ta=25°C
   V_{CE}max: +52.8V
   $I_C$max: 5mA[V_{CE}(sat)max=2V]

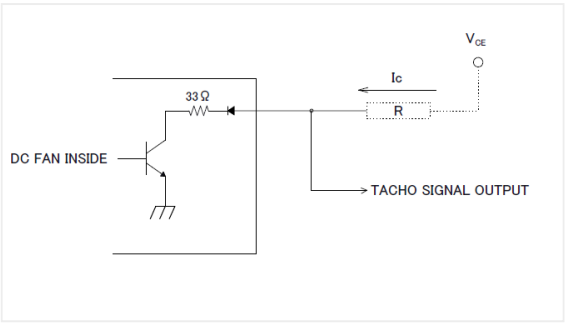

3. Output Waveform: At Rated Voltage
   Output Signal Voltage

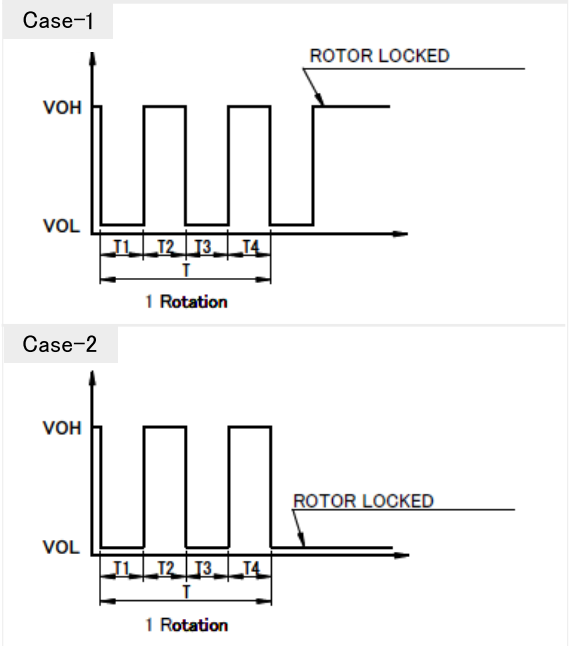

1) When the rotor is locked at VOH position of signal, signal keeps VOH position.
2) When the rotor is locked at VOL position of signal, signal keeps VOL position.
3) T=T1+T2+T3+T4=60/m=1 rotation

   m: Fan Speed (min^{-1})

   Tacho Duty Cycle=50%±10%

Downloaded from Arrow.com.

IP68 Protected DC Fan with PWM and Tach Output

17250VE-48R (0-Type)

Outlines

(Name Plate)

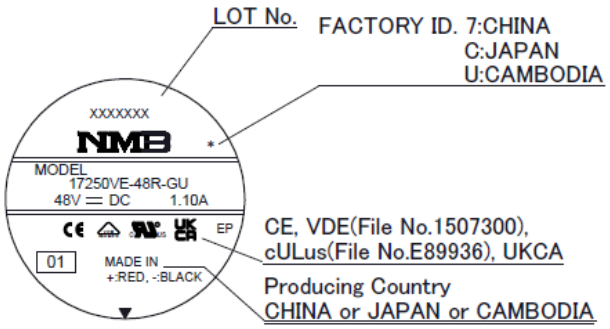

Materials

Casing: Aluminum (Black)
Impeller: Plastic (Black)
Bearing: Stainless Steel Ball Bearing
Lead Wire: UL10368 or UL3443
AWG22 for
Red (+)
Black (-)
AWG24 or AWG22 for
White(Tach)
Brown (PWM)

(Outline)

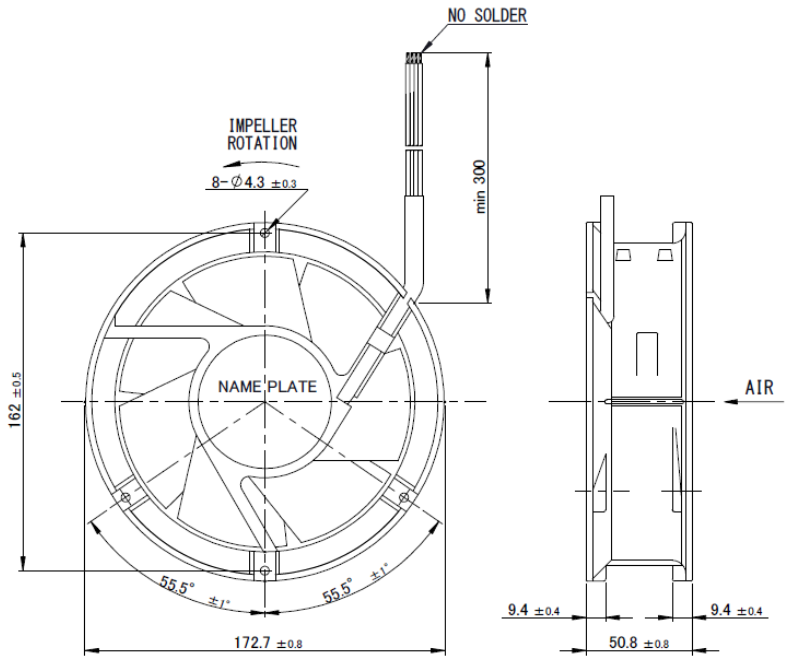

(Panel Out-line)

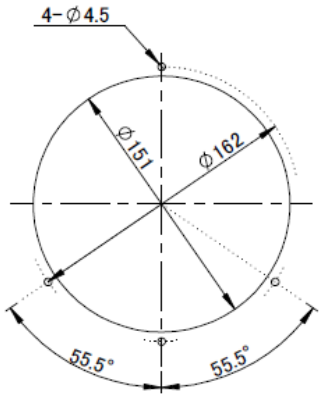

Inlet Side

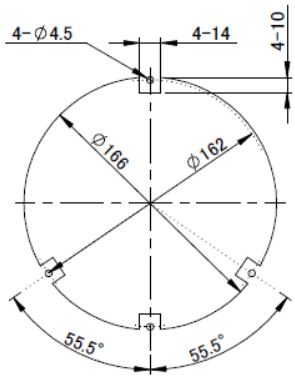

Outlet Side

Downloaded from Arrow.com.