Series 66 Protective Covers

for MIL-DTL-28840 Connectors

660-010 Plug Cover

M28840 Plug Cover

660-010 protective cover fits MIL-DTL-28840 plug connectors. Aluminum or stainless steel, with stainless steel fittings.

PART NUMBER

	660-010	NF	D	S	5	-04

Base P/N	**660-010**
Material/Finish	*See Table 1*
Shell Size	Shell Size (Ref.): 11, 13, 15, 17, 19, 23, 25, 29, 33 Size Code: A, B, C, D, E, F, G, H, J
Attachment Type	**N** No Attachment *See Table 2 for Attachment Types*
Attachment Length	***Omit for Attachment Type N*** *Length in One Inch Increments*
Attachment Ring	***Omit for Attachment Types N and SK*** **-00** No Ring *See Table 3 for Attachment Ring Codes*

TABLE 1 MATERIAL / FINISH

Aluminum		Stainless Steel	
C	Black Anodize	Z1	Passivate
M	Electroless Nickel	ZU	Black Cadmium
NF	Olive Drab Cadmium		
MT	Nickel-PTFE		
ZR	Black Zinc-Nickel		
TZ	Tin-Zinc		

TABLE 2 ATTACHMENT TYPE

D — SST Bead Chain
.125 (3.2) diameter, size 6, -65 to +200 °C

F — Wire Rope, Blue Nylon Jacket
6/6 nylon over stainless steel rope, fair flexibility, good abrasion resistance, -55 to +100 °C

G — Black Nylon Rope
Very flexible, good abrasion and fuel resistance, .094 (2.4) diameter, -55 to +100 °C

H — Wire Rope, Clear FEP Jacket
Clear FEP jacket over SST rope, fair flexibility, good abrasion resistance, .100" diameter, -65 to +200 °C

S — Sash Chain
#8 sash chain, stainless steel.
Length tolerance is ± one link .280 (7.1)

SK — Nylon Rope with Slip Knot
Very flexible, good abrasion and fuel resistance, .094 (2.4) diameter. Length includes .5" (13mm) dia. loop, -55 to +100 °C

T — SST Wire Rope, No Jacket
Good flexibility, good abrasion resistance, .047 (1.2) diameter, passivated, -65 to +200 °C

U — Wire Rope, Black Polyurethane
Stainless steel rope with black polyurethane coating, flexible, excellent abrasion resistance and resistance to fuels, .080" (2mm) diameter, -55 to +125 °C

Shell Size	A Thread Class 2A	F Max In.	F Max mm.
11 (A)	.750-.1P-.2L-D.S.	1.028	26.1
13 (B)	.875-.1P-.2L-D.S.	1.141	29.0
15 (C)	1.062-.1P-.2L-D.S	1.263	32.1
17 (D)	1.125-.1P-.2L-D.S.	1.387	35.2
19 (E)	1.312-.1P-.2L-D.S.	1.513	38.4
23 (F)	1.500-.1P-.2L-D.S.	1.703	43.3
25 (G)	1.625-.1P-.2L-D.S.	1.825	46.4
29 (H)	1.812-.1P-.2L-D.S.	2.143	54.4
33 (J)	2.000-.1P-.2L-D.S.	2.329	59.2

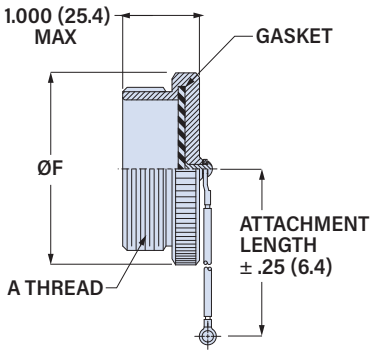

TABLE 3 ATTACHMENT RING

EYELET		STYLE A RING		STYLE B RING		SPLIT RING	
Code	Eyelet I.D. ± .010 (0.3)	Code	Ring I.D. ± .015 (0.4)	Code	Ring I.D. ± .015 (0.4)	Code	Ring I.D. ± .015 (0.4)
-06	.125 (3.2)	-095	.312 (7.9)	-10	.593 (15.1)	-50	.425 (10.8)
-01	.140 (3.6)	-100	.391 (9.9)	-12	.718 (18.2)	-52	.485 (12.3)
-09	.156 (4.0)	-101	.516 (13.1)	-13	.765 (19.4)	-54	.640 (16.3)
-05	.167 (4.2)	-103	.641 (16.3)	-14	.844 (21.4)	-56	.750 (19.1)
-02	.182 (4.6)	-104	.708 (18.0)	-15	.890 (22.6)	-58	.890 (22.6)
-03	.191 (4.9)	-105	.766 (19.5)	-17	1.015 (25.8)	-60	1.015 (25.8)
-04	.197 (5.0)	-106	.896 (22.8)	-19	1.140 (29.0)	-62	1.095 (27.8)
-07	.218 (5.5)	-107	1.016 (25.8)	-20	1.203 (30.6)	-64	1.130 (28.7)
		-108	1.141 (29.0)	-21	1.265 (32.1)	-66	1.250 (31.8)
		-208	1.203 (30.6)	-22	1.343 (34.1)	-68	1.350 (34.3)
		-109	1.266 (32.2)	-24	1.484 (37.7)	-70	1.375 (34.9)
		-110	1.391 (35.3)	-27	1.640 (41.7)	-72	1.485 (37.7)
		-111	1.521 (38.6)	-29	1.765 (44.8)	-74	1.625 (41.3)
		-112	1.641 (41.7)	-30	1.890 (48.0)	-76	1.750 (44.5)
		-113	1.766 (44.9)	-31	1.953 (49.6)	-80	1.980 (50.3)
		-114	1.891 (48.0)	-33	2.077 (52.8)	-84	2.235 (56.8)
		-115	2.078 (52.8)	-36	2.187 (55.5)	-86	2.310 (58.7)
		-116	2.406 (61.1)	-40	2.406 (61.1)	-88	2.475 (62.9)
		-117	2.510 (63.8)	-44	2.656 (67.5)	-90	2.655 (67.4)

CABLE TIE

-WS
Black 6/6 nylon cable tie 1.77 (45.0) max. wire bundle dia.

© 2022 Glenair, Inc • 1211 Air Way, Glendale, CA 91201 • 818-247-6000 • www.glenair.com • U.S. CAGE code 06324 • Circular Connector Accessories

Dimensions in Inches (millimeters) are subject to change without notice.

Downloaded from Arrow.com.