Omnipolar Detection Hall IC

(Dual Outputs for both S and N Pole Polarity Detection)

BU52177GXZ

General Description

The BU52177GXZ is omnipolar Hall IC incorporating a polarity determination circuit that enables separate operation (output) of both the South and North poles.
This Hall IC product can be in tablets, smart phones, and other applications in order to detect open and close of the cover.
And this Hall IC product can be in digital video cameras and other applications involving display panels in order to detect the front/back location or determine the rotational direction of the panel.

Key Specifications

- V_{DD} Voltage Range: 1.65V to 3.6V
- Operate Point: ±15.0mT(Typ)
- Hysteresis: 0.9mT(Typ)
- Period: 50ms(Typ)
- Supply Current (AVG): 5.0µA (Typ)
- Output Type: CMOS
- Operating Temperature Range: -40°C to +85°C

Package

	W(Typ) x D(Typ) x H(Max)
XCSP30L1	0.65mm x 0.65mm x 0.33mm

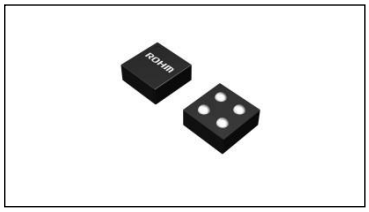

Features

- Omnipolar Detection (Polarity Detection for both S and N Poles with Separate, Dual Outputs)
- Micro Power Operation (Small Current Using Intermittent Operation Method)
- Ultra-compact CSP4 Package (XCSP30L1)
- Polarity Judgment and Separate Output on both Poles
  (OUT1=S-pole Output; OUT2=N-pole Output)

Applications

- Tablets, Smart Phones, Notebook Computers, Digital Video Cameras, Digital Still Cameras, etc.

Typical Application Circuit, Block Diagram, Pin Configurations and Pin Descriptions

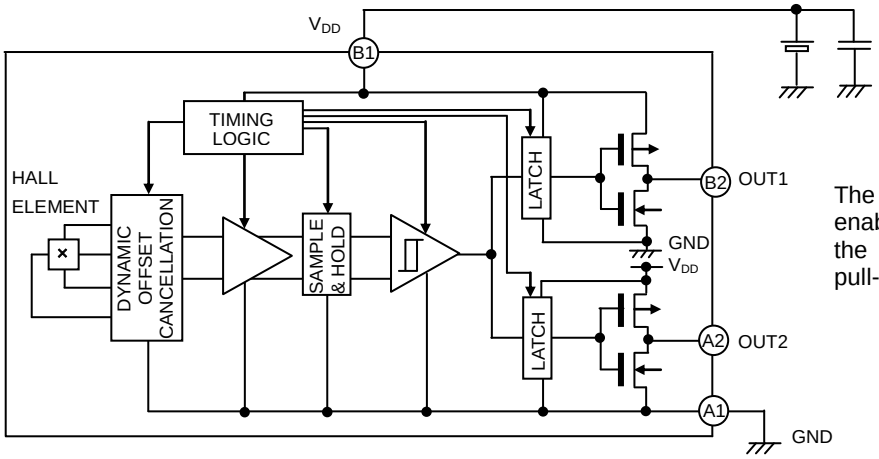

Adjust the bypass capacitor value as necessary, according to voltage noise conditions, etc.

The CMOS output terminals enable direct connection to the PC, with no external pull-up resistor required.

Pin No.	Pin Name	Function
A1	GND	Ground
A2	OUT2	Output (React to the north pole)
B1	V_{DD}	Power supply
B2	OUT1	Output (React to the south pole)

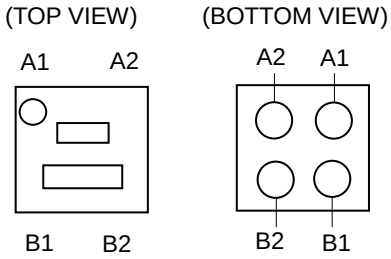

○Product structure : Silicon monolithic integrated circuit ○This product has no designed protection against radioactive rays

© 2015 ROHM Co., Ltd. All rights reserved.

Downloaded from Arrow.com.

Contents

General Description 1
Features 1
Applications 1
Key Specifications 1
Package 1
Typical Application Circuit, Block Diagram, Pin Configurations and Pin Descriptions 1
Absolute Maximum Ratings 3
Recommended Operating Conditions 3
Magnetic, Electrical Characteristics 3
Measurement Circuit 4
Typical Performance Curves 4
Figure 6. Operate Point, Release Point vs Ambient Temperature 5
Figure 7. Operate Point, Release Point vs Supply Voltage 5
Figure 8. Period vs Ambient Temperature 5
Figure 9. Period vs Supply Voltage 5
Figure 10. Supply Current vs Ambient Temperature 6
Figure 11. Supply Current vs Supply Voltage 6
Description of Operations 7
Intermittent Operation at Power ON 10
Magnet Selection 10
Slide-by Position Sensing 11
Position of the Hall Element 11
Footprint Dimensions 11
I/O Equivalence Circuit 11
Operational Notes 12
Ordering Information 14
Marking Diagrams 14
Physical Dimension, Tape and Reel Information 15
Revision History 16

© 2015 ROHM Co., Ltd. All rights reserved.

Downloaded from Arrow.com.

Absolute Maximum Ratings (Ta = 25°C)

Parameter	Symbol	Rating	Unit
Power Supply Voltage	V_{DD}	-0.1 to +4.5 (Note 1)	V
Output Current	I_{OUT}	±0.5	mA
Power Dissipation	Pd	0.44 (Note 2)	W
Operating Temperature Range	T_{opr}	-40 to +85	°C
Storage Temperature Range	T_{stg}	-40 to +125	°C

(Note 1) Not to exceed Pd
(Note 2) Derate by 4.4mW/°C when operating above Ta=25°C (when mounted in 60mm x 60mm x 1.6mm size glass epoxy board).
Caution: Operating the IC over the absolute maximum ratings may damage the IC. The damage can either be a short circuit between pins or an open circuit between pins and the internal circuitry. Therefore, it is important to consider circuit protection measures, such as adding a fuse, in case the IC is operated over the absolute maximum ratings.

Recommended Operating Conditions (Ta= -40°C to +85°C)

Parameter	Symbol	Min	Typ	Max	Unit
Power Supply Voltage	V_{DD}	1.65	1.80	3.60	V

Magnetic, Electrical Characteristics (Unless otherwise specified V_{DD}=1.80V Ta=25°C)

Parameter	Symbol	Min	Typ	Max	Unit	Conditions
Operate Point	B_{opS}	-	15.0	19.0	mT	Output: OUT1 (React to the south pole)
	B_{opN}	-19.0	-15.0	-		Output: OUT2 (React to the north pole)
Release Point	B_{rpS}	10.1	14.1	-	mT	Output: OUT1 (React to the south pole)
	B_{rpN}	-	-14.1	-10.1		Output: OUT2 (React to the north pole)
Hysteresis	B_{hysS}	-	0.9	-	mT	
	B_{hysN}	-	0.9	-		
Period	T_p	-	50	100	ms	
Output High Voltage	V_{OH}	V_{DD} -0.2	-	-	V	$B_{rpN}<B<B_{rpS}$ (Note 3) I_{OUT}=-0.5mA
Output Low Voltage	V_{OL}	-	-	0.2	V	$B<B_{opN}$, $B_{opS}<B$ (Note 3) I_{OUT}=+0.5mA
Supply Current	$I_{DD(AVG)}$	-	5	8	µA	Average
Supply Current During Startup Time	$I_{DD(EN)}$	-	2.8	-	mA	During startup time value
Supply Current During Standby Time	$I_{DD(DIS)}$	-	1.8	-	µA	During standby time value

(Note 3) B = Magnetic Flux Density
1mT=10Gauss
Positive ("+") polarity flux is defined as the magnetic flux from south pole which is direct toward to the branded face of the sensor.
After applying power supply, it takes one cycle of period (T_P) to become definite output.

© 2015 ROHM Co., Ltd. All rights reserved.

Downloaded from Arrow.com.

Measurement Circuit

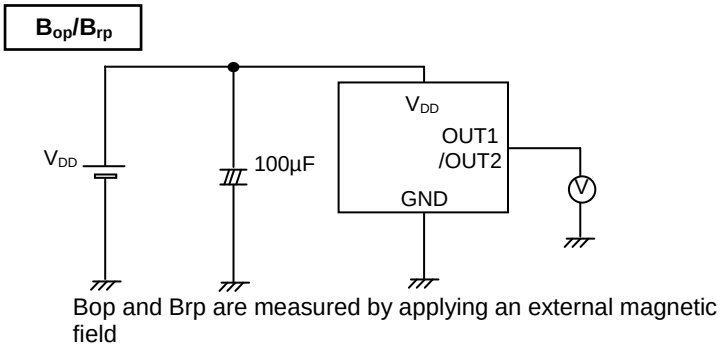

Figure 1. B_{op},B_{rp} Measurement Circuit

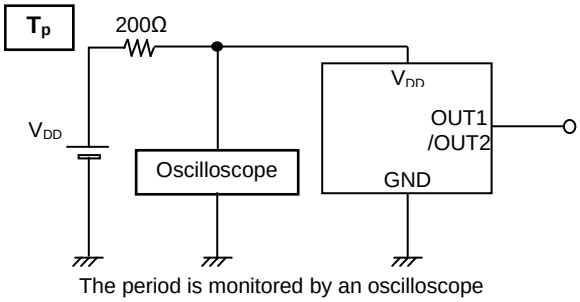

Figure 2. T_p Measurement Circuit

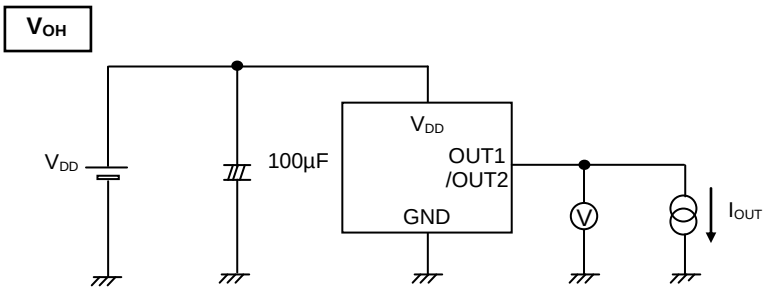

Figure 3. V_{OH} Measurement Circuit

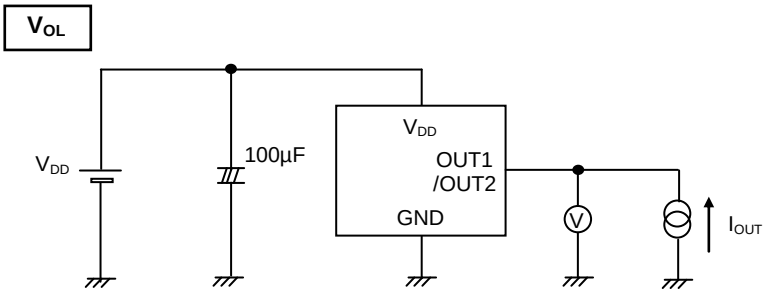

Figure 4. V_{OL} Measurement Circuit

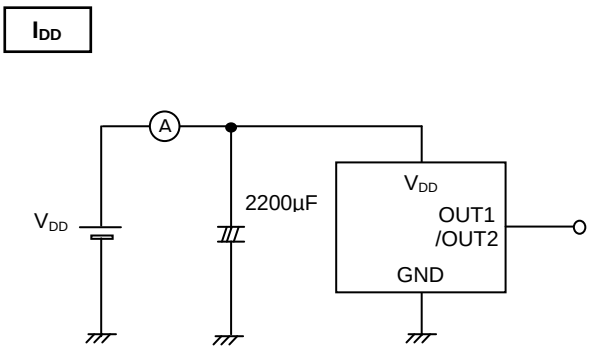

Figure 5. I_{DD} Measurement Circuit

© 2015 ROHM Co., Ltd. All rights reserved.

Downloaded from Arrow.com.

Typical Performance Curves

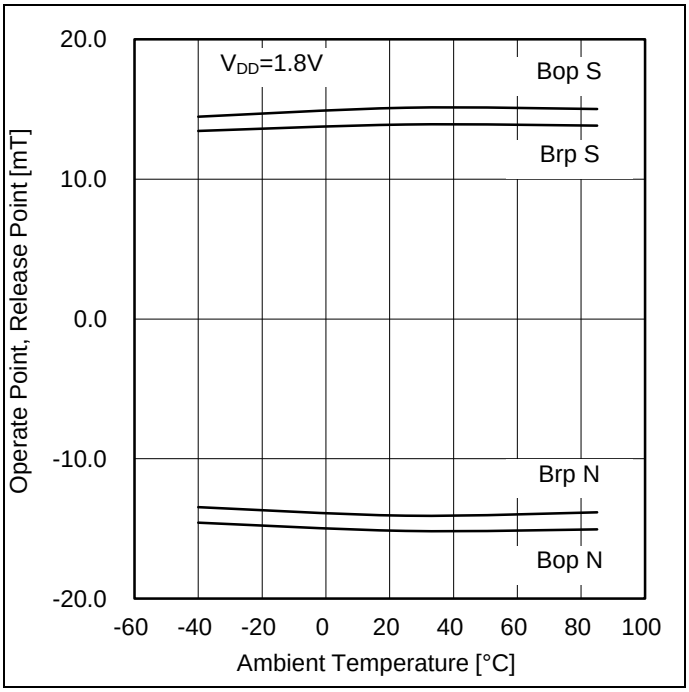

Figure 6. Operate Point, Release Point vs Ambient Temperature

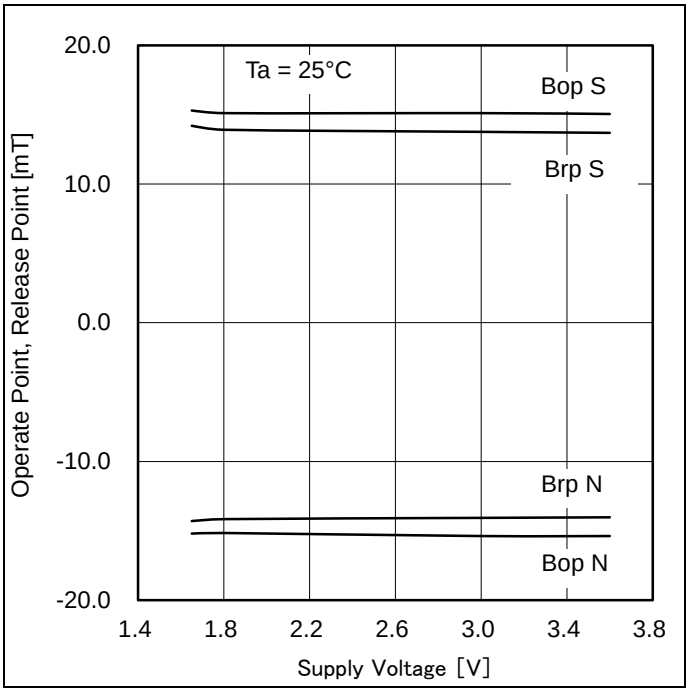

Figure 7. Operate Point, Release Point vs Supply Voltage

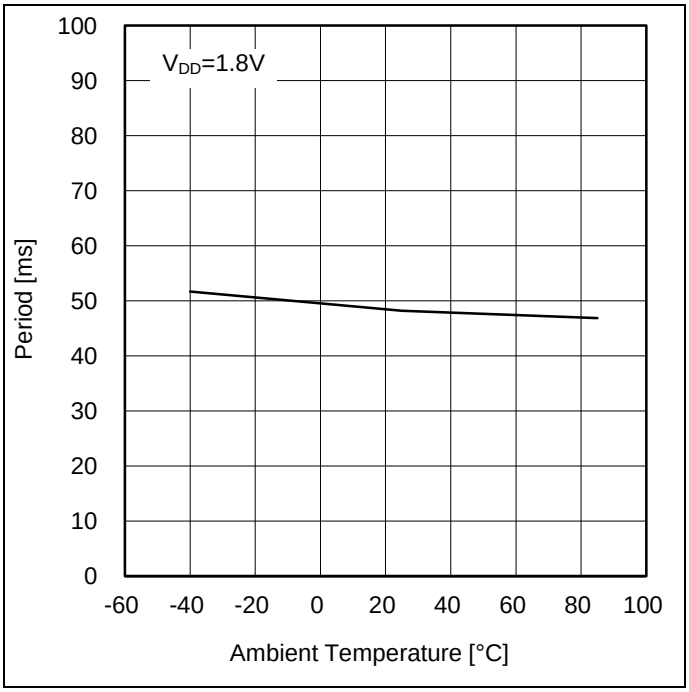

Figure 8. Period vs Ambient Temperature

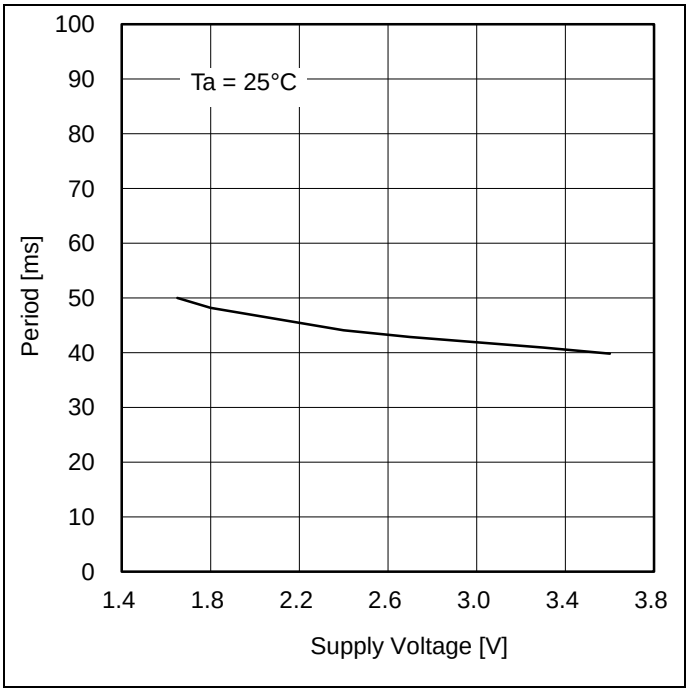

Figure 9. Period vs Supply Voltage

© 2015 ROHM Co., Ltd. All rights reserved.

Downloaded from Arrow.com.

Typical Performance Curves - continued

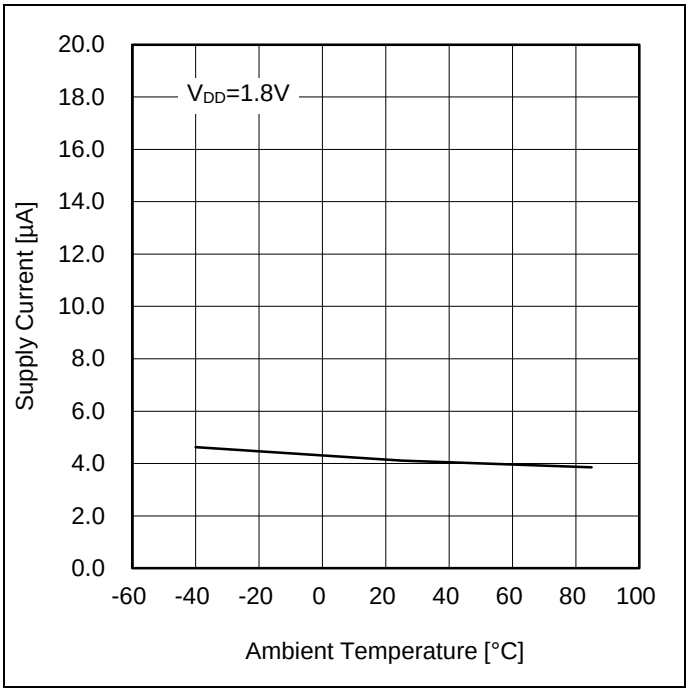

Figure 10. Supply Current vs Ambient Temperature

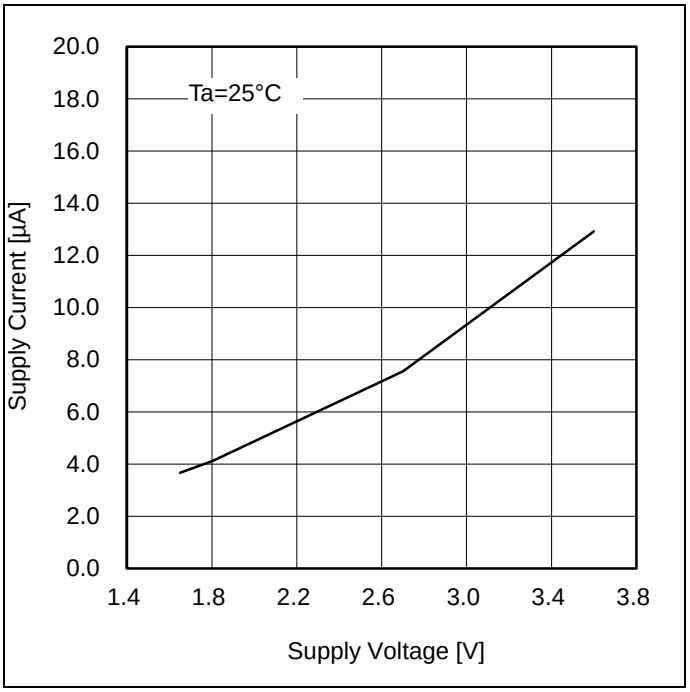

Figure 11. Supply Current vs Supply Voltage

© 2015 ROHM Co., Ltd. All rights reserved.

Downloaded from Arrow.com.

Description of Operations

Micropower Operation (Small Current Consumption Using Intermittent Sensing)

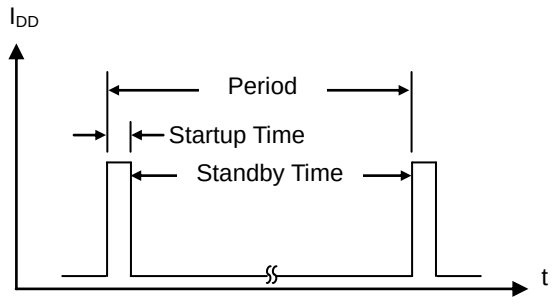

Figure 12

The dual output omnipolar detection Hall IC uses intermittent sensing save energy. At startup the Hall elements, amplifier, comparator, and other detection circuits power on and magnetic detection begins. During standby, the detection circuits power off, thereby reducing current consumption. The detection results are held while standby is active, and then output.

Reference Period: 50ms (MAX100ms)
Reference Startup Time: 48µs

(Offset Cancellation)

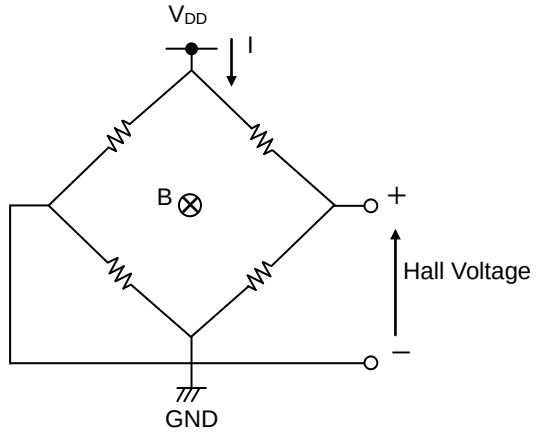

Figure 13

The Hall elements form an equivalent Wheatstone (resistor) bridge circuit. Offset voltage may be generated by a differential in this bridge resistance, or can arise from changes in resistance due to package or bonding stress. A dynamic offset cancellation circuit is employed to cancel this offset voltage.
When the Hall elements are connected as shown in Figure 13 and a magnetic field is applied perpendicular to the Hall elements, a voltage is generated at the mid-point terminal of the bridge. This is known as Hall voltage.
Dynamic cancellation switches the wiring (shown in the figure) to redirect the current flow to a 90° angle from its original path, and thereby cancels the Hall voltage.
The magnetic signal (only) is maintained in the sample/hold circuit during the offset cancellation process and then released.

© 2015 ROHM Co., Ltd. All rights reserved.

Downloaded from Arrow.com.

(Magnetic Field Detection Mechanism)

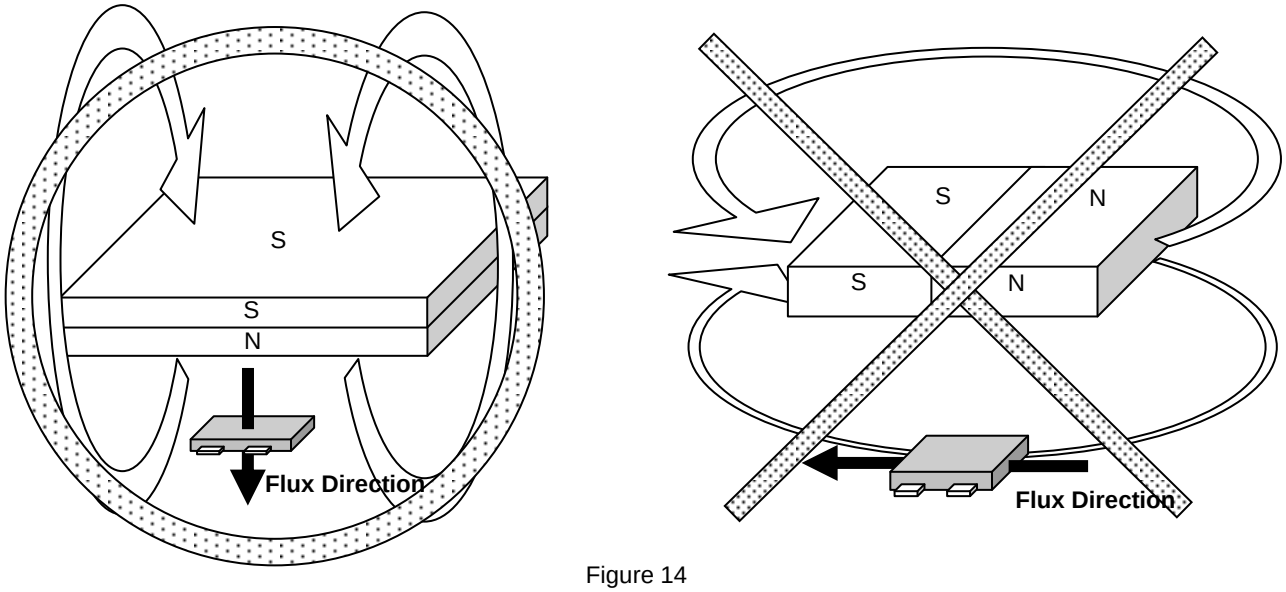

Figure 14

The Hall IC cannot detect magnetic fields that run horizontal to the package top layer.
Be certain to configure the Hall IC so that the magnetic field is perpendicular to the top layer.

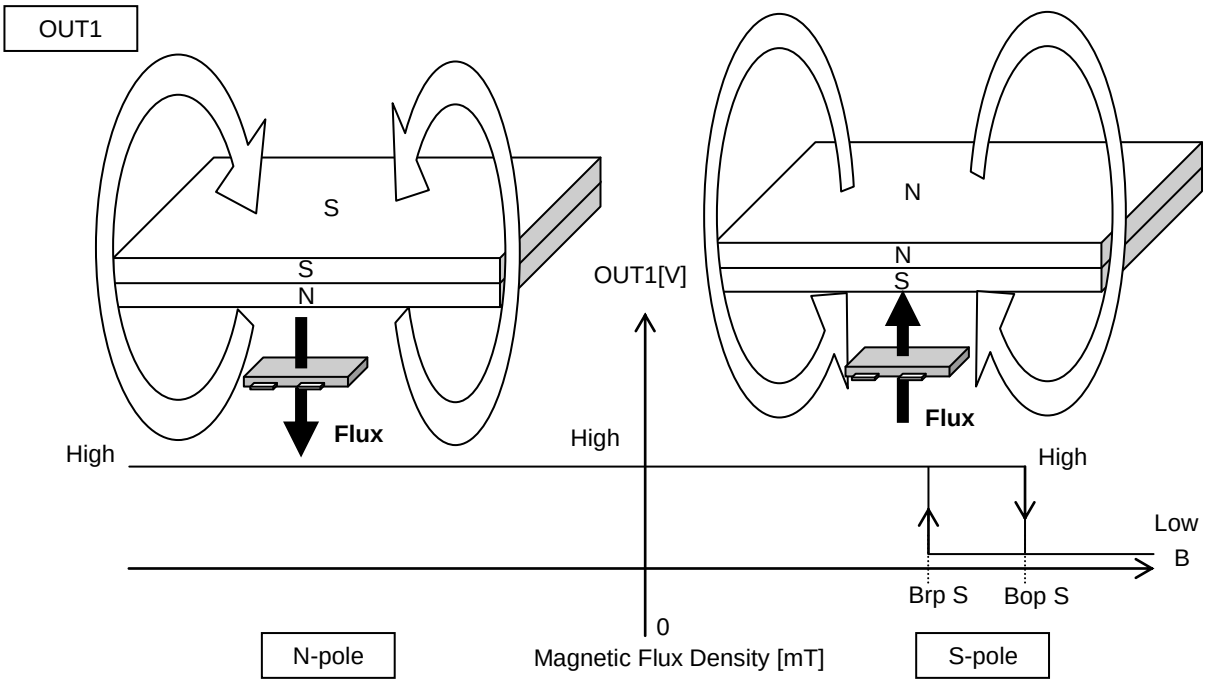

Figure 15. S-pole Detection

The OUT1 pin detects and outputs for the S-pole only. Since the OUT1 pin output is unipolar, the output does not respond to the N-pole.

© 2015 ROHM Co., Ltd. All rights reserved.

Downloaded from Arrow.com.

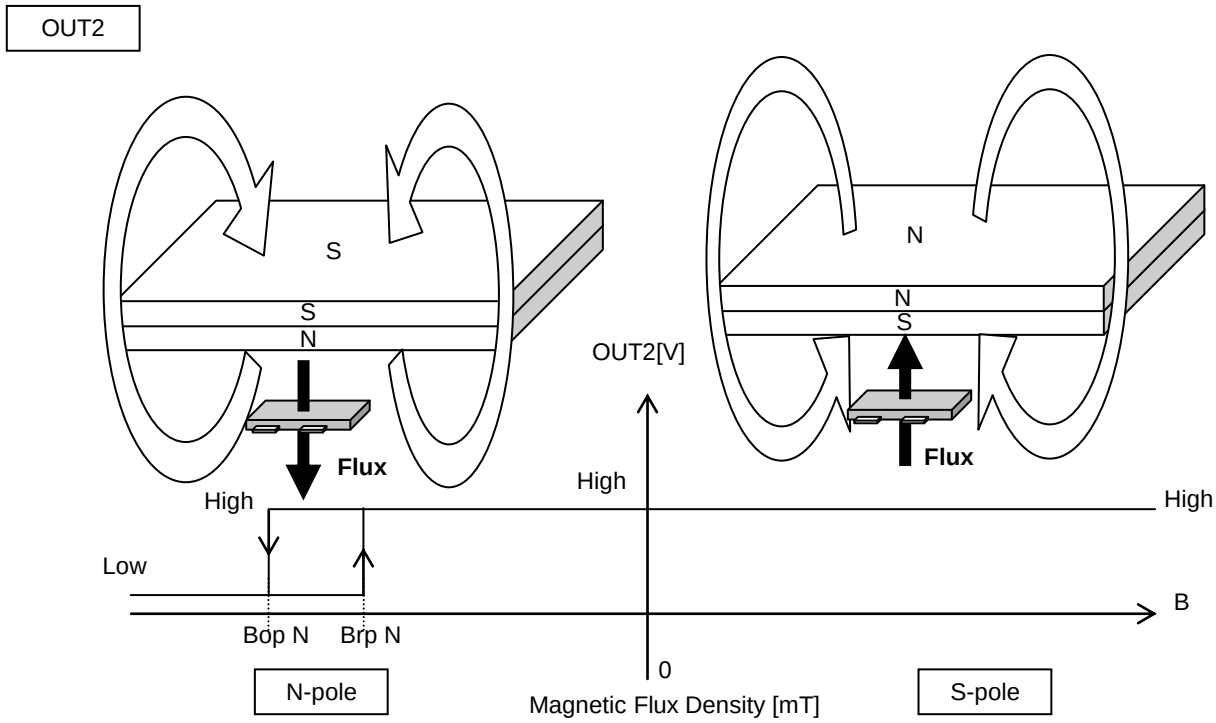

Figure 16. N-pole Detection

The OUT2 pin detects and outputs for the N-pole only. Since the OUT2 pin output is unipolar, the output does not respond to the S-pole. The dual output omnipolar detection Hall IC detects magnetic fields running perpendicular to the top surface of the package. There is an inverse relationship between magnetic flux density and the distance separating the magnet and the Hall IC: when distance increases magnetic density falls. When it drops below the operate point (Bop), output goes HIGH. When the magnet gets closer to the IC and magnetic density rises to the operate point, the output switches LOW. In LOW output mode, the distance from the magnet to the IC increases again until the magnetic density falls to a point just below Bop, and output returns HIGH. The point where magnetic flux density restores a HIGH output is known as the release point, Brp. This detection and adjustment mechanism is designed to prevent noise, oscillation, and other erratic system operation.

© 2015 ROHM Co., Ltd. All rights reserved.

Downloaded from Arrow.com.

Intermittent Operation at Power ON

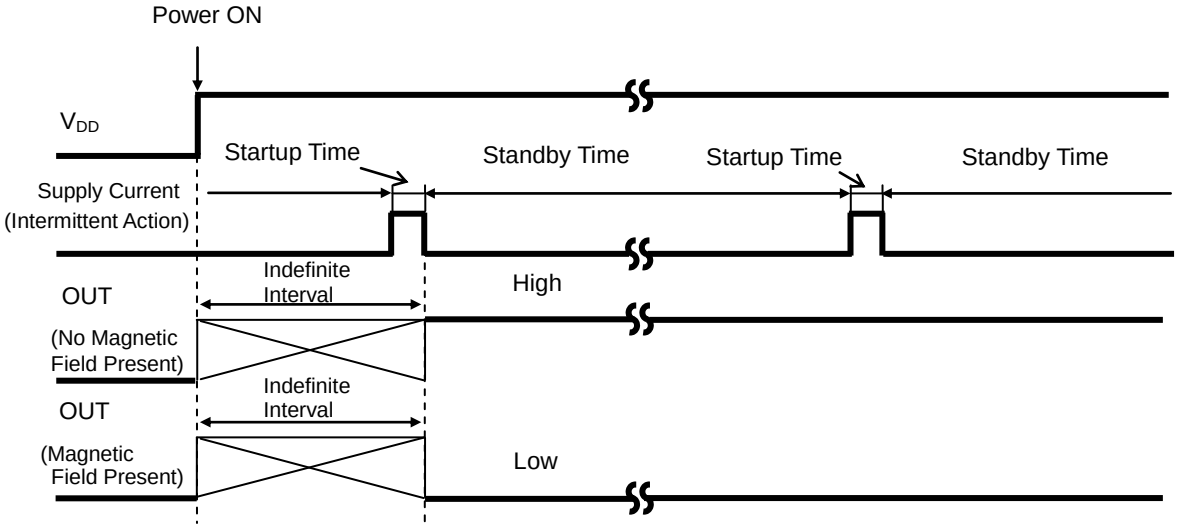

Figure 17

The dual output omnipolar detection Hall IC adopts an intermittent operation method in detecting the magnetic field during startup, as shown in Figure 17. The IC outputs to the appropriate terminal based on the detection result and maintains the output condition during the standby period. The time from power ON until the end of the initial startup period is an indefinite interval, but it cannot exceed the maximum period of 100ms. To accommodate the system design, the Hall IC output read should be programmed within 100ms of power ON, but after the time allowed for the period, ambient temperature, and supply voltage.

Magnet Selection

Of the two representative varieties of permanent magnet, neodymium generally offers greater magnetic power per volume than ferrite, thereby enabling the highest degree of miniaturization, thus, neodymium is best suited for small equipment applications. Figure 18 shows the relation between the size (volume) of a neodymium magnet and magnetic flux density. The graph plots the correlation between the distance (L) from three versions of a 4mm x 4mm cross-section neodymium magnet (1mm, 2mm, and 3mm thick) and magnetic flux density. Figure 19 shows Hall IC detection distance – a good guide for determining the proper size and detection distance of the magnet. Based on the BU52177GXZ operating point max of 19.0mT, the minimum detection distance for the 1mm, 2mm and 3mm magnets would be 4.4mm, 5.5mm, and 6.1mm, respectively. To increase the magnet's detection distance, either increases the magnet's thickness or sectional area.

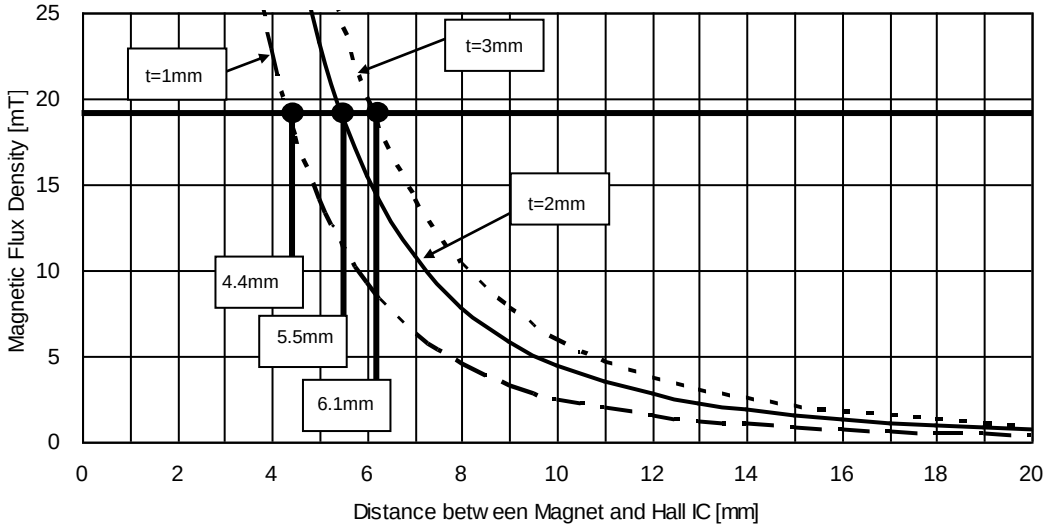

Figure 18. Magnetic Flux Density vs Distance between Magnet and Hall IC

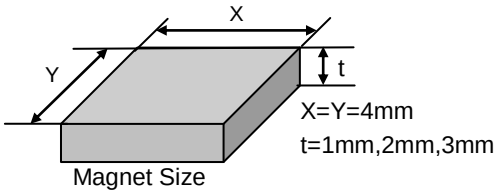

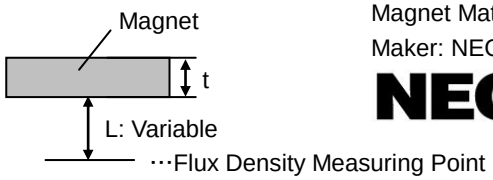

Magnet Material: NEOMAX-44H (Material)
Maker: NEOMAX CO.,LTD.

Figure 19. Magnet Dimensions and Flux Density Measuring Point

© 2015 ROHM Co., Ltd. All rights reserved.

Downloaded from Arrow.com.

Slide-by Position Sensing

Figure 20 depicts the slide-by configuration employed for position sensing. Note that when the gap (d) between the magnet and the Hall IC is narrowed, the reverse magnetic field generated by the magnet can cause the IC to malfunction. As seen in Figure 21, the magnetic field runs in opposite directions at Point A and Point B. Since the dual output omnipolar detection Hall IC can detect the S-pole at Point A and the N-pole at Point B, the sensor can switch the output ON as the magnet slides by in the process of position detection. Figure 22 plots magnetic flux density during the magnet slide-by. Although a reverse magnetic field was generated in the process, the magnetic flux density decreases compared with the center of the magnet. This demonstrates that slightly widening the gap (d) between the magnet and Hall IC reduces the reverse magnetic field and prevents malfunctions.

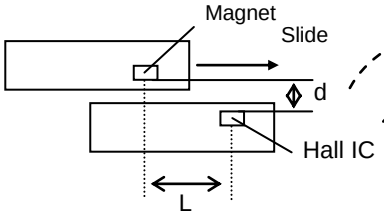

Figure 20

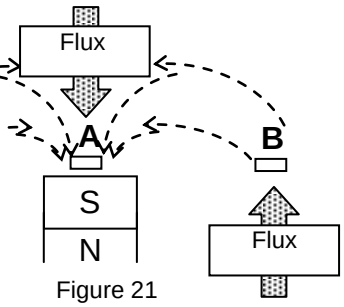

Figure 21

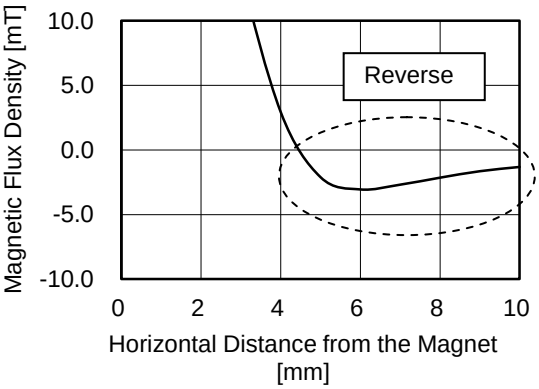

Figure 22. Magnetic Flux Density vs Horizontal Distance from the Magnet

Position of the Hall Element

(Reference)

XCSP30L1

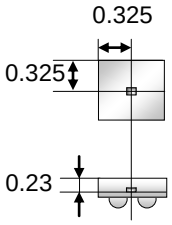

(UNIT: mm)

Footprint Dimensions

(Optimize footprint dimensions to the board design and soldering condition)

XCSP30L1

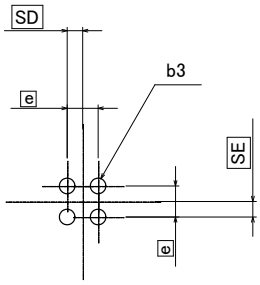

Symbol	Reference value
e	0.35
b3	φ0.18
SD	0.175
SE	0.175

(UNIT: mm)

I/O Equivalence Circuit

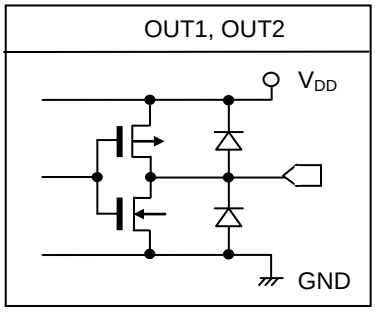

Figure 23

The Hall ICs output pins are configured for CMOS (inverter) output removing the need for external resistance and allow direct connection to the host. Removing the need for external resistors allows for reduction of the current that would otherwise flow to the external resistor during magnetic field detection thereby supporting an overall lower current (micropower) operation.

© 2015 ROHM Co., Ltd. All rights reserved.

Downloaded from Arrow.com.

Operational Notes

1. **Reverse Connection of Power Supply**
   Connecting the power supply in reverse polarity can damage the IC. Take precautions against reverse polarity when connecting the power supply, such as mounting an external diode between the power supply and the IC's power supply pins.

2. **Power Supply Lines**
   Design the PCB layout pattern to provide low impedance supply lines. Furthermore, connect a capacitor to ground at all power supply pins. Consider the effect of temperature and aging on the capacitance value when using electrolytic capacitors.

3. **Ground Voltage**
   Ensure that no pins are at a voltage below that of the ground pin at any time, even during transient condition.

4. **Ground Wiring Pattern**
   When using both small-signal and large-current ground traces, the two ground traces should be routed separately but connected to a single ground at the reference point of the application board to avoid fluctuations in the small-signal ground caused by large currents. Also ensure that the ground traces of external components do not cause variations on the ground voltage. The ground lines must be as short and thick as possible to reduce line impedance.

5. **Thermal Consideration**
   Should by any chance the power dissipation rating be exceeded the rise in temperature of the chip may result in deterioration of the properties of the chip. In case of exceeding this absolute maximum rating, increase the board size and copper area to prevent exceeding the Pd rating.

6. **Recommended Operating Conditions**
   These conditions represent a range within which the expected characteristics of the IC can be approximately obtained. The electrical characteristics are guaranteed under the conditions of each parameter.

7. **Inrush Current**
   When power is first supplied to the IC, it is possible that the internal logic may be unstable and inrush current may flow instantaneously due to the internal powering sequence and delays, especially if the IC has more than one power supply. Therefore, give special consideration to power coupling capacitance, power wiring, width of ground wiring, and routing of connections.

8. **Operation Under Strong Electromagnetic Field**
   Operating the IC in the presence of a strong electromagnetic field may cause the IC to malfunction.

9. **Testing on Application Boards**
   When testing the IC on an application board, connecting a capacitor directly to a low-impedance output pin may subject the IC to stress. Always discharge capacitors completely after each process or step. The IC's power supply should always be turned off completely before connecting or removing it from the test setup during the inspection process. To prevent damage from static discharge, ground the IC during assembly and use similar precautions during transport and storage.

10. **Inter-pin Short and Mounting Errors**
    Ensure that the direction and position are correct when mounting the IC on the PCB. Incorrect mounting may result in damaging the IC. Avoid nearby pins being shorted to each other especially to ground, power supply and output pin. Inter-pin shorts could be due to many reasons such as metal particles, water droplets (in very humid environment) and unintentional solder bridge deposited in between pins during assembly to name a few.

© 2015 ROHM Co., Ltd. All rights reserved.

Downloaded from Arrow.com.

Operational Notes – continued

11. Unused Input Pins

Input pins of an IC are often connected to the gate of a MOS transistor. The gate has extremely high impedance and extremely low capacitance. If left unconnected, the electric field from the outside can easily charge it. The small charge acquired in this way is enough to produce a significant effect on the conduction through the transistor and cause unexpected operation of the IC. So unless otherwise specified, unused input pins should be connected to the power supply or ground line.

12. Regarding the Input Pin of the IC

In the construction of this IC, P-N junctions are inevitably formed creating parasitic diodes or transistors. The operation of these parasitic elements can result in mutual interference among circuits, operational faults, or physical damage. Therefore, conditions which cause these parasitic elements to operate, such as applying a voltage to an input pin lower than the ground voltage should be avoided. Furthermore, do not apply a voltage to the input pins when no power supply voltage is applied to the IC. Even if the power supply voltage is applied, make sure that the input pins have voltages within the values specified in the electrical characteristics of this IC.

13. Ceramic Capacitor

When using a ceramic capacitor, determine the dielectric constant considering the change of capacitance with temperature and the decrease in nominal capacitance due to DC bias and others.

14. Area of Safe Operation (ASO)

Operate the IC such that the output voltage, output current, and power dissipation are all within the Area of Safe Operation (ASO).

15. Disturbance light

In a device where a portion of silicon is exposed to light such as in a WL-CSP, IC characteristics may be affected due to photoelectric effect. For this reason, it is recommended to come up with countermeasures that will prevent the chip from being exposed to light.

© 2015 ROHM Co., Ltd. All rights reserved.

Downloaded from Arrow.com.

Ordering Information

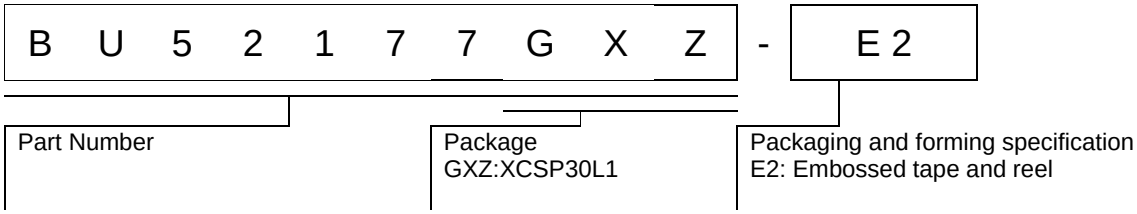

Marking Diagrams

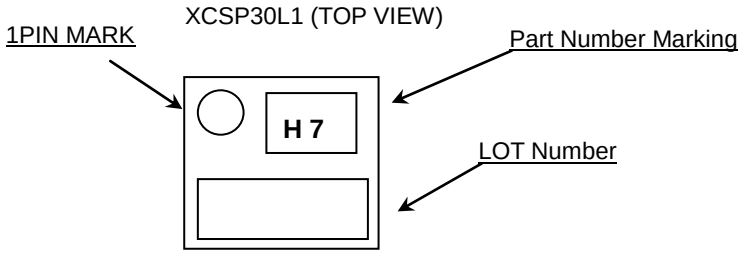

© 2015 ROHM Co., Ltd. All rights reserved.

Downloaded from Arrow.com.

Physical Dimension, Tape and Reel Information

Package Name	XCSP30L1(BU52177GXZ)

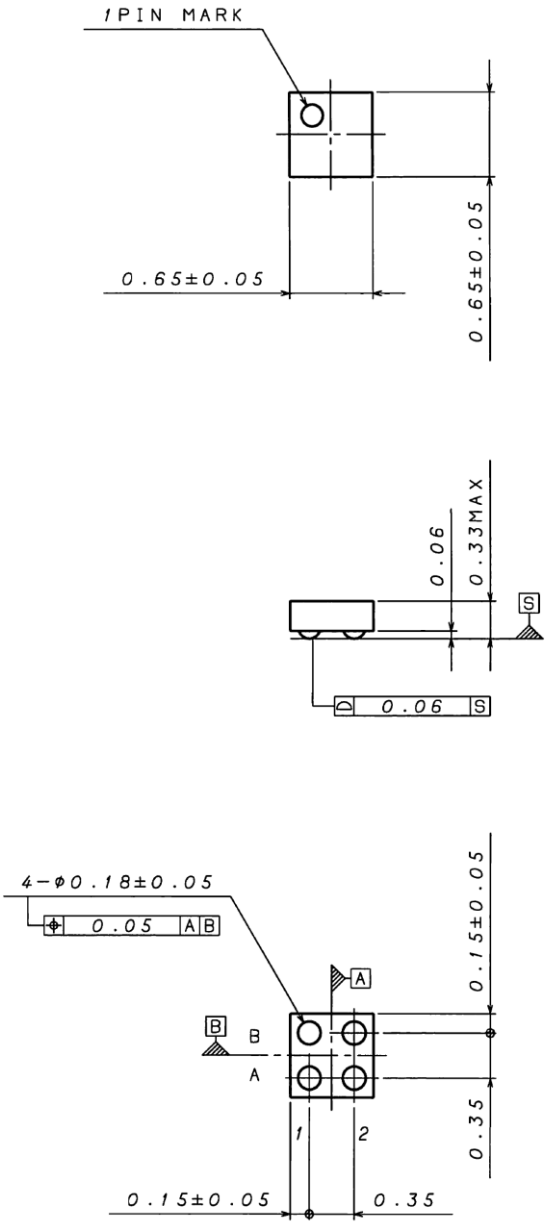

Unit [mm]

< Tape and Reel Information >

Tape	**Embossed carrier tape**
Quantity	**6000pcs**
Direction of feed	**E2** **The direction is the pin 1 of product is at the upper left when you hold reel on the left hand and you pull out the tape on the right hand**

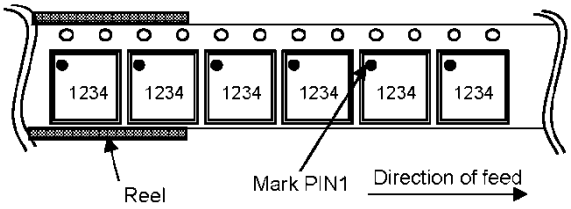

© 2015 ROHM Co., Ltd. All rights reserved.

Downloaded from Arrow.com.

Revision History

Date	Revision	Changes
6.Feb.2015	001	New Release
25.Jul.2016	002	Change of the physical dimension tolerance

© 2015 ROHM Co., Ltd. All rights reserved.

Downloaded from Arrow.com.

Notice

Precaution on using ROHM Products

1. Our Products are designed and manufactured for application in ordinary electronic equipments (such as AV equipment, OA equipment, telecommunication equipment, home electronic appliances, amusement equipment, etc.). If you intend to use our Products in devices requiring extremely high reliability (such as medical equipment (Note 1), transport equipment, traffic equipment, aircraft/spacecraft, nuclear power controllers, fuel controllers, car equipment including car accessories, safety devices, etc.) and whose malfunction or failure may cause loss of human life, bodily injury or serious damage to property ("Specific Applications"), please consult with the ROHM sales representative in advance. Unless otherwise agreed in writing by ROHM in advance, ROHM shall not be in any way responsible or liable for any damages, expenses or losses incurred by you or third parties arising from the use of any ROHM's Products for Specific Applications.

(Note1) Medical Equipment Classification of the Specific Applications

JAPAN	USA	EU	CHINA
CLASSⅢ	CLASSⅢ	CLASSⅡb	CLASSⅢ
CLASSⅣ		CLASSⅢ	

2. ROHM designs and manufactures its Products subject to strict quality control system. However, semiconductor products can fail or malfunction at a certain rate. Please be sure to implement, at your own responsibilities, adequate safety measures including but not limited to fail-safe design against the physical injury, damage to any property, which a failure or malfunction of our Products may cause. The following are examples of safety measures:
   [a] Installation of protection circuits or other protective devices to improve system safety
   [b] Installation of redundant circuits to reduce the impact of single or multiple circuit failure

3. Our Products are designed and manufactured for use under standard conditions and not under any special or extraordinary environments or conditions, as exemplified below. Accordingly, ROHM shall not be in any way responsible or liable for any damages, expenses or losses arising from the use of any ROHM's Products under any special or extraordinary environments or conditions. If you intend to use our Products under any special or extraordinary environments or conditions (as exemplified below), your independent verification and confirmation of product performance, reliability, etc, prior to use, must be necessary:
   [a] Use of our Products in any types of liquid, including water, oils, chemicals, and organic solvents
   [b] Use of our Products outdoors or in places where the Products are exposed to direct sunlight or dust
   [c] Use of our Products in places where the Products are exposed to sea wind or corrosive gases, including Cl_2, H_2S, NH_3, SO_2, and NO_2
   [d] Use of our Products in places where the Products are exposed to static electricity or electromagnetic waves
   [e] Use of our Products in proximity to heat-producing components, plastic cords, or other flammable items
   [f] Sealing or coating our Products with resin or other coating materials
   [g] Use of our Products without cleaning residue of flux (even if you use no-clean type fluxes, cleaning residue of flux is recommended); or Washing our Products by using water or water-soluble cleaning agents for cleaning residue after soldering
   [h] Use of the Products in places subject to dew condensation

4. The Products are not subject to radiation-proof design.

5. Please verify and confirm characteristics of the final or mounted products in using the Products.

6. In particular, if a transient load (a large amount of load applied in a short period of time, such as pulse. is applied, confirmation of performance characteristics after on-board mounting is strongly recommended. Avoid applying power exceeding normal rated power; exceeding the power rating under steady-state loading condition may negatively affect product performance and reliability.

7. De-rate Power Dissipation depending on ambient temperature. When used in sealed area, confirm that it is the use in the range that does not exceed the maximum junction temperature.

8. Confirm that operation temperature is within the specified range described in the product specification.

9. ROHM shall not be in any way responsible or liable for failure induced under deviant condition from what is defined in this document.

Precaution for Mounting / Circuit board design

1. When a highly active halogenous (chlorine, bromine, etc.) flux is used, the residue of flux may negatively affect product performance and reliability.

2. In principle, the reflow soldering method must be used on a surface-mount products, the flow soldering method must be used on a through hole mount products. If the flow soldering method is preferred on a surface-mount products, please consult with the ROHM representative in advance.

For details, please refer to ROHM Mounting specification

© 2015 ROHM Co., Ltd. All rights reserved.

Downloaded from Arrow.com.

Precautions Regarding Application Examples and External Circuits

1. If change is made to the constant of an external circuit, please allow a sufficient margin considering variations of the characteristics of the Products and external components, including transient characteristics, as well as static characteristics.

2. You agree that application notes, reference designs, and associated data and information contained in this document are presented only as guidance for Products use. Therefore, in case you use such information, you are solely responsible for it and you must exercise your own independent verification and judgment in the use of such information contained in this document. ROHM shall not be in any way responsible or liable for any damages, expenses or losses incurred by you or third parties arising from the use of such information.

Precaution for Electrostatic

This Product is electrostatic sensitive product, which may be damaged due to electrostatic discharge. Please take proper caution in your manufacturing process and storage so that voltage exceeding the Products maximum rating will not be applied to Products. Please take special care under dry condition (e.g. Grounding of human body / equipment / solder iron, isolation from charged objects, setting of Ionizer, friction prevention and temperature / humidity control).

Precaution for Storage / Transportation

1. Product performance and soldered connections may deteriorate if the Products are stored in the places where:
   [a] the Products are exposed to sea winds or corrosive gases, including Cl2, H2S, NH3, SO2, and NO2
   [b] the temperature or humidity exceeds those recommended by ROHM
   [c] the Products are exposed to direct sunshine or condensation
   [d] the Products are exposed to high Electrostatic

2. Even under ROHM recommended storage condition, solderability of products out of recommended storage time period may be degraded. It is strongly recommended to confirm solderability before using Products of which storage time is exceeding the recommended storage time period.

3. Store / transport cartons in the correct direction, which is indicated on a carton with a symbol. Otherwise bent leads may occur due to excessive stress applied when dropping of a carton.

4. Use Products within the specified time after opening a humidity barrier bag. Baking is required before using Products of which storage time is exceeding the recommended storage time period.

Precaution for Product Label

A two-dimensional barcode printed on ROHM Products label is for ROHM's internal use only.

Precaution for Disposition

When disposing Products please dispose them properly using an authorized industry waste company.

Precaution for Foreign Exchange and Foreign Trade act

Since concerned goods might be fallen under listed items of export control prescribed by Foreign exchange and Foreign trade act, please consult with ROHM in case of export.

Precaution Regarding Intellectual Property Rights

1. All information and data including but not limited to application example contained in this document is for reference only. ROHM does not warrant that foregoing information or data will not infringe any intellectual property rights or any other rights of any third party regarding such information or data.

2. ROHM shall not have any obligations where the claims, actions or demands arising from the combination of the Products with other articles such as components, circuits, systems or external equipment (including software).

3. No license, expressly or implied, is granted hereby under any intellectual property rights or other rights of ROHM or any third parties with respect to the Products or the information contained in this document. Provided, however, that ROHM will not assert its intellectual property rights or other rights against you or your customers to the extent necessary to manufacture or sell products containing the Products, subject to the terms and conditions herein.

Other Precaution

1. This document may not be reprinted or reproduced, in whole or in part, without prior written consent of ROHM.

2. The Products may not be disassembled, converted, modified, reproduced or otherwise changed without prior written consent of ROHM.

3. In no event shall you use in any way whatsoever the Products and the related technical information contained in the Products or this document for any military purposes, including but not limited to, the development of mass-destruction weapons.

4. The proper names of companies or products described in this document are trademarks or registered trademarks of ROHM, its affiliated companies or third parties.

© 2015 ROHM Co., Ltd. All rights reserved.

Downloaded from Arrow.com.

General Precaution

1. Before you use our Products, you are requested to carefully read this document and fully understand its contents. ROHM shall not be in any way responsible or liable for failure, malfunction or accident arising from the use of any ROHM's Products against warning, caution or note contained in this document.

2. All information contained in this document is current as of the issuing date and subject to change without any prior notice. Before purchasing or using ROHM's Products, please confirm the latest information with a ROHM sales representative.

3. The information contained in this document is provided on an "as is" basis and ROHM does not warrant that all information contained in this document is accurate and/or error-free. ROHM shall not be in any way responsible or liable for any damages, expenses or losses incurred by you or third parties resulting from inaccuracy or errors of or concerning such information.

© 2015 ROHM Co., Ltd. All rights reserved.

Downloaded from Arrow.com.

bu52177gxz - Web Page

Part Number	bu52177gxz
Package	XCSP30L1
Unit Quantity	6000
Minimum Package Quantity	6000
Packing Type	Taping
Constitution Materials List	inquiry
RoHS	Yes

Downloaded from Arrow.com.