DATE	REV	ECN	APP'D. BY
3-16-16	A8	10615	TRM
10-6-16	A9	10782	TRM
09-14-20	A10	11611	BTS
7-12-23	B0	12208	JE

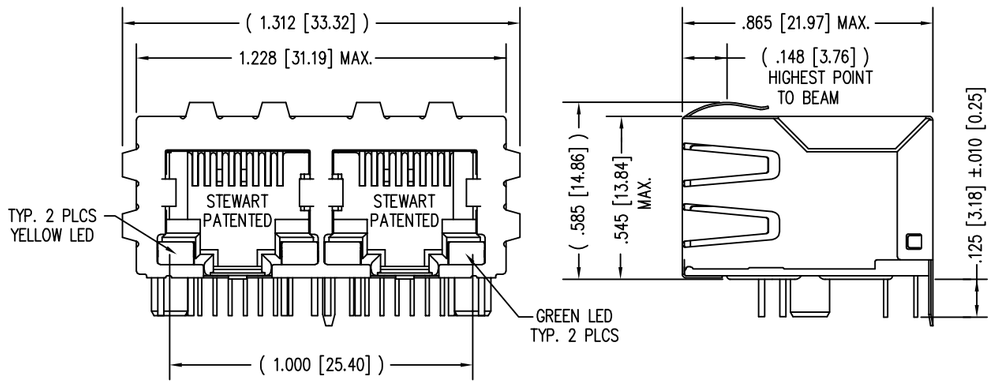

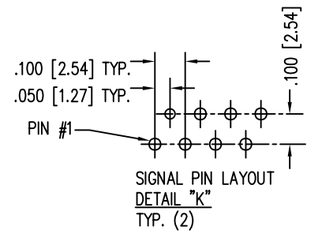

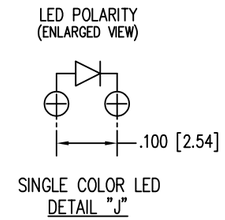

LED SPECIFICATIONS			
STANDARD LED	FORWARD VOLTAGE (MAX)	* FORWARD VOLTAGE (TYP)	WAVELENGTH
YELLOW	2.5 V	2.1 V	590 nm
GREEN	2.5 V	2.2 V	565 nm

* WITH A FORWARD CURRENT OF 20 mA (TYP)

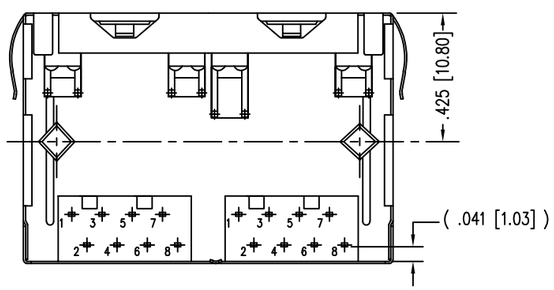

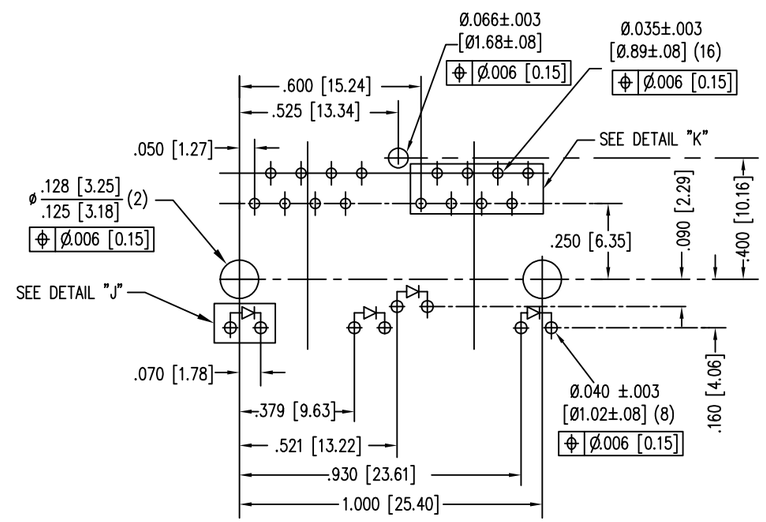

P.C.B. RECOMMENDED HOLE LAYOUT
SEEN FROM COMPONENT SIDE

ALL CENTERLINE DIMENSIONS ARE BASIC.

NOTES:

1. CONNECTOR MATERIALS:
   HOUSING: THERMOPLASTIC UL94 V-0
   CONTACTS/SHIELD: COPPER ALLOY
   SHIELD PLATING: NICKEL OR "REFLOW" TIN
   CONTACT PLATING: SELECTIVE GOLD IN CONTACT AREA
   SEE CHART FOR PART NUMBER
2. PRODUCT DESIGNED FOR CATEGORY 5E APPLICATIONS.
3. DIMENSIONS AND TOLERANCES COMPLY WITH TIA-1096 STANDARD.
4. FOR PRODUCT SPECIFICATIONS SEE PR022-01.
5. THE SUGGESTED PANEL OPENING IS INTENDED TO GIVE USER THE ABILITY TO HAVE REASONABLE JACK/PANEL CLEARANCES, YET MAINTAIN GROUNDING CAPABILITY. THESE VARIABLES CAN BE ADJUSTED IN EITHER DIRECTION BUT MAY CARRY SOME CONSEQUENCES IN THE FORM OF LOWER MATING FORCES OR TIGHTER ASSEMBLY TOLERANCES.

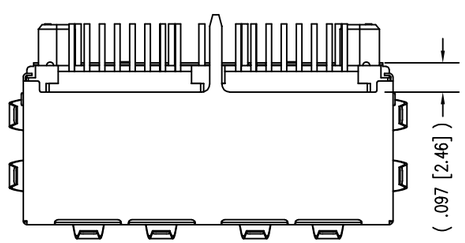

30 MICRO-INCHES [0.76um]	SS-748802SC5-YG-PG4-BZ
CONTACT PLATING IN MATING AREA	PART NUMBER

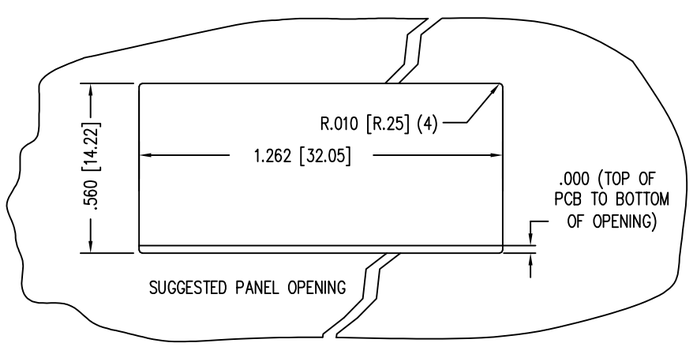

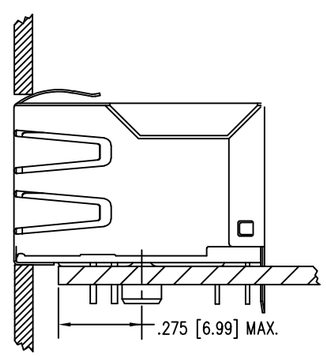

RoHS

THIRD ANGLE PROJECTION

DO NOT SCALE DRAWING

DRAWING IS SUBJECT TO CHANGE WITHOUT NOTICE

DIMENSIONS: INCHES [METRIC]

UNLESS OTHERWISE SPECIFIED TOLERANCES ARE ±.005 [0.13] ANGLES ARE ± 1°

SHEET NO. 1 OF 1

stewart CONNECTOR a bel group
11118 Susquehanna Trail South
Glen Rock, PA 17327-9199
(717) 235-7512
http://www.stewartconnector.com

TITLE: EIGHT CONTACT, EIGHT POSITION EMI-RFI ONE PIECE SHIELDED ESD GROUNDED 2 PORT PCB HARMONICA CAT 5E LED JACK PAC

THIS DRAWING AND THE SUBJECT MATTER SHOWN THEREON ARE CONFIDENTIAL AND THE PROPRIETARY PROPERTY OF STEWART CONNECTOR AND SHALL NOT BE REPRODUCED, COPIED, OR USED IN ANY MANNER WITHOUT PRIOR WRITTEN CONSENT OF STEWART CONNECTOR. ONE OR MORE U.S. PATENTS MAY APPLY TO THIS PRODUCT. FOR DETAILS, PLEASE VISIT: HTTP://BELFUSE.COM/STEWART/STEWART_PATENTS/

DRN BY:	DHG	DATE	1-13-03
APPD BY:	RGC	DATE	1-14-03
DWG NO.	CT740116	REV.	B0

AutoCAD

Downloaded from Arrow.com.