45 4580 03 MP T2,0

High-current contact elements

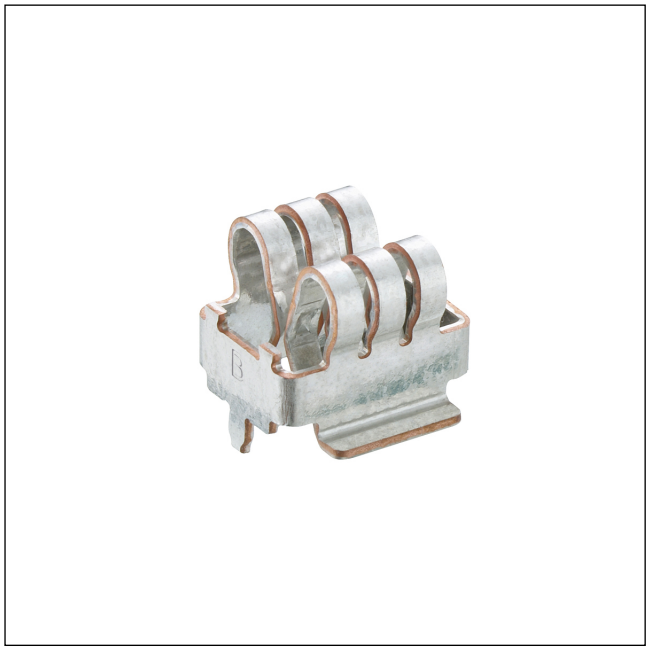

High-current contact bush with positioning pegs, in surface mount technology (SMT), mateable from top or bottom direction, for tab contacts 1.5–2.0 mm, for printed circuit boards or busbars

Downloaded from Arrow.com.

45 4580 03 MP T2,0

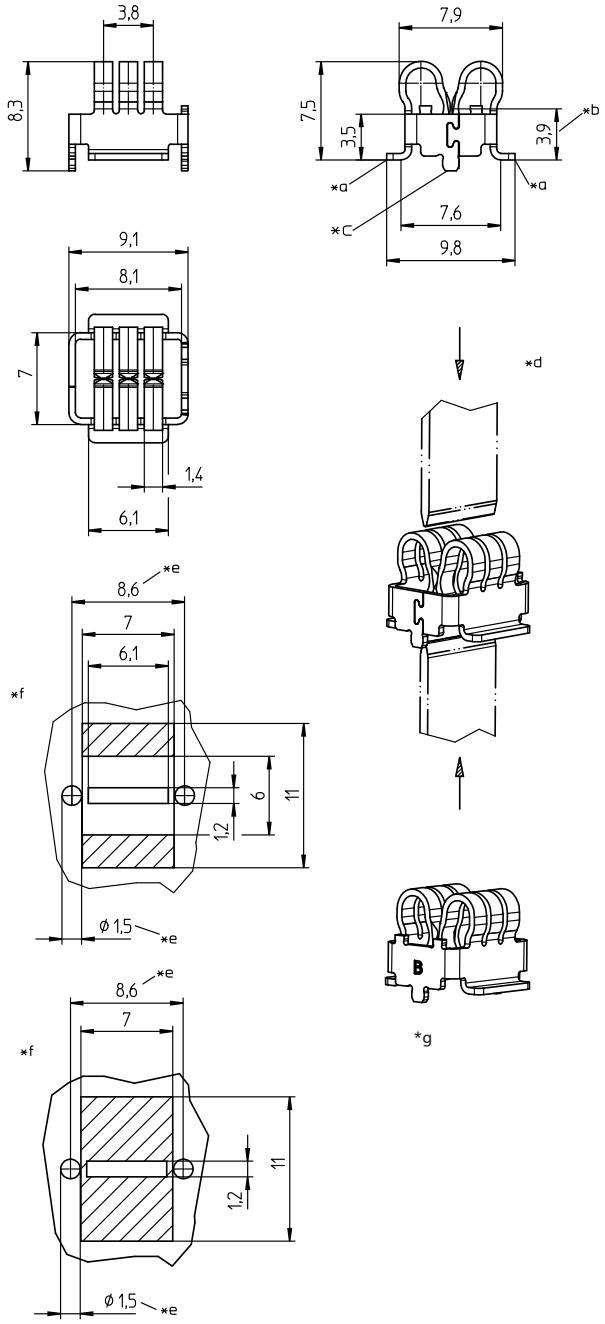

Environmental conditions

Temperature range	-40 °C/+120 °C

Materials

Contact	CuCr alloy, tin-plated

Mechanical data

Mating with	tab contact 5.3–7.2 mm x 1.5–2.0 mm applicable for reflow soldering on printed circuit board applicable for laser welding on a busbar or lead frame
Mating cycles	≤ 5
Insertion force	tab contact 1.5 mm 35 N ± 10 N – top or bottom entry tab contact 2.0 mm 35 N ± 10 N – top entry 50 N ± 10 N – bottom entry [1]
Withdrawal force	6 N +10/-3 N [1]

[1] measured with polished steel test tabs

Electrical data (at T_{amb} 20 °C)

Contact resistance	< 0.5 mΩ
Rated current	≤ 60 A [1]

[1] depending on the connection to the printed circuit board/busbar, installation situation and heat dissipation

Downloaded from Arrow.com.

Assembly tolerances for top and bottom entry
- tab dimensions 4.8 mm x 2.0 mm x length 8 mm
- larger assembly tolerances possible for lengths > 15 mm

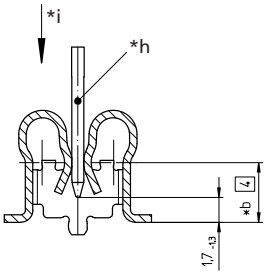

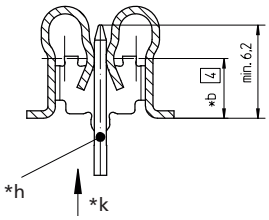

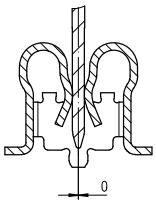

typical mating

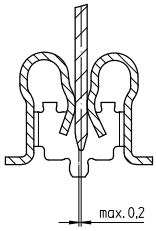

permissible lateral offset

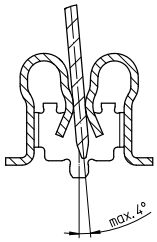

permissible tilt

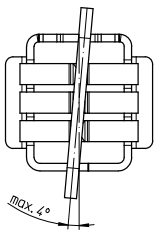

permissible twist

permissible combined tolerances
tilt max. 2°, twist max. 2°

Downloaded from Arrow.com.

Geometry of the mating tab contact

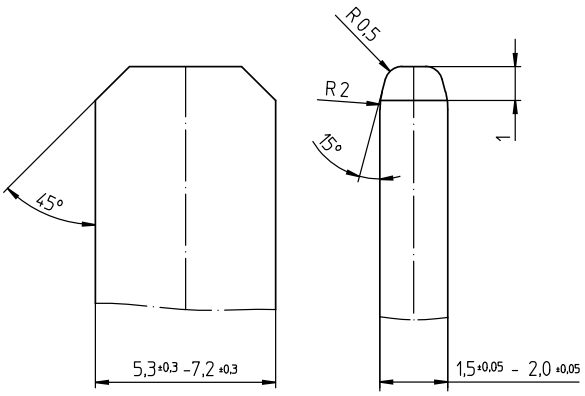

Material to be coordinated with Lumberg.

Derating diagram

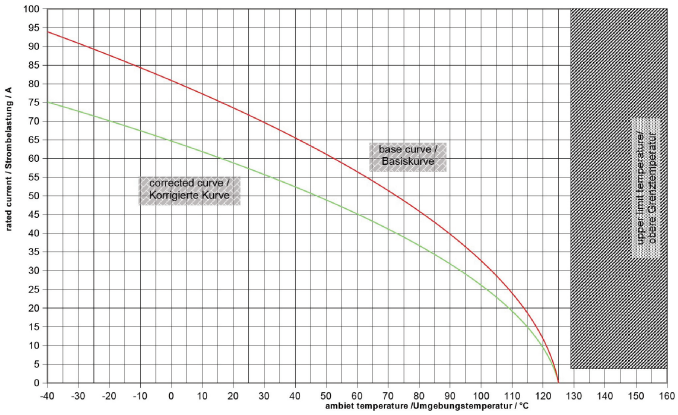

Test setup: application example of a closed system, no air circulation, no heat dissipation
- tab contact: Cu-HCP, 7.5 mm x 1.0 mm
- connected wire: section 6 mm²
- ambient temperature: 20 °C

Further test configurations and details upon request.

Downloaded from Arrow.com.

45 4580 03 MP T2,0

Packaging
reel: 330 mm/110 mm/32,5 mm
leader: 400 mm, 25 empty cavities
trailer: 160 mm, 10 empty cavities

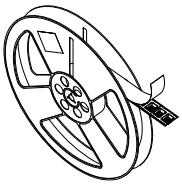

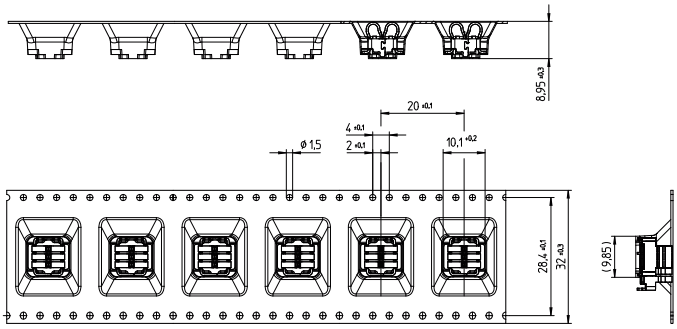

*a supporting surface for soldering – dimensions per solder pad min. 7.0 mm x 2.5 mm
*b height contact point
*c positioning peg
*d mateable from top or bottom direction
*e bore holes for positioning pegs
*f circuit board layout (example)
*g marking B for type 4580 03 MP T2,0
*h contact tab
*i mating from top direction
*k mating from bottom direction

Downloaded from Arrow.com.

45 4580 03 MP T2,0

Designation	Pole Number	PU (Pieces)	MDQ (Pieces)
4580 03 MP T2,0 V12VP12	1	350	2100

Packaging:
on reel

Downloaded from Arrow.com.