## Product Specifications

### Electrical Specifications

**Voltage Rating:** 250VAC/DC
**Operating Temperature:** -55°C ~ 125°C

### Standards

250mA-16A
File E197390
Tested to IEC 60127 standards

### Interrupting Rating

10kA; 1500A @250VAC (250mA-6.3A)
1500A @250VAC (8A-16A)
1000A @250VDC (250mA-6.3A)
1000A @250VDC (8A-16A)

### Material Specifications

**Body Material:** Ceramic

### Mechanical Dimensions: Inches [mm]

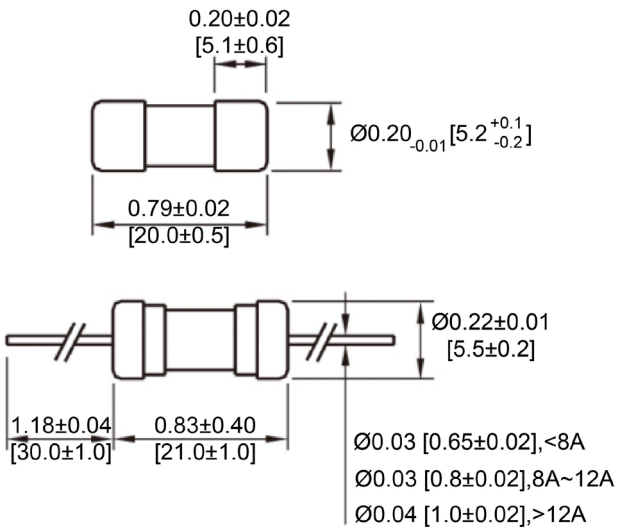


## Part Numbers Information

| Cartridge P/N | Axial Lead P/N | Ampere Rating | $I^2T$ Reference ($A^2$ Sec) | Electrical Resistance (Ω) |
|---|---|---|---|---|
| FCD-250mA | FCD-P-250mA | 250mA | 0.0071 | 4.5700 |
| FCD-315mA | FCD-P-315mA | 315mA | 0.0142 | 3.1500 |
| FCD-400mA | FCD-P-400mA | 400mA | 0.0200 | 2.0600 |
| FCD-500mA | FCD-P-500mA | 500mA | 0.0309 | 1.5700 |
| FCD-630mA | FCD-P-630mA | 630mA | 0.0671 | 1.1100 |
| FCD-800mA | FCD-P-800mA | 800mA | 0.1211 | 0.7840 |
| FCD-1A | FCD-P-1A | 1A | 0.2019 | 0.5500 |
| FCD-1.25A | FCD-P-1.25A | 1.25A | 0.4489 | 0.3980 |
| FCD-1.6A | FCD-P-1.6A | 1.6A | 1.2430 | 0.2450 |
| FCD-2A | FCD-P-2A | 2A | 2.2040 | 0.1830 |
| FCD-2.5A | FCD-P-2.5A | 2.5A | 1.9951 | 0.0615 |
| FCD-3.15A | FCD-P-3.15A | 3.15A | 4.2710 | 0.0445 |
| FCD-4A | FCD-P-4A | 4A | 12.220 | 0.0286 |
| FCD-5A | FCD-P-5A | 5A | 24.206 | 0.0219 |
| FCD-6.3A | FCD-P-6.3A | 6.3A | 51.308 | 0.0146 |
| FCD-8A | FCD-P-8A | 8A | 149.08 | 0.0086 |
| FCD-10A | FCD-P-10A | 10A | 227.40 | 0.0071 |
| FCD-12A | FCD-P-12A | 12A | 360.46 | 0.0052 |
| FCD-12.5A | FCD-P-12.5A | 12.5A | 406.34 | 0.0047 |
| FCD-15A | FCD-P-15A | 15A | 602.50 | 0.0040 |
| FCD-16A | FCD-P-16A | 16A | 694.42 | 0.0035 |



Downloaded from Arrow.com.

## Time vs Percent of Rated Current

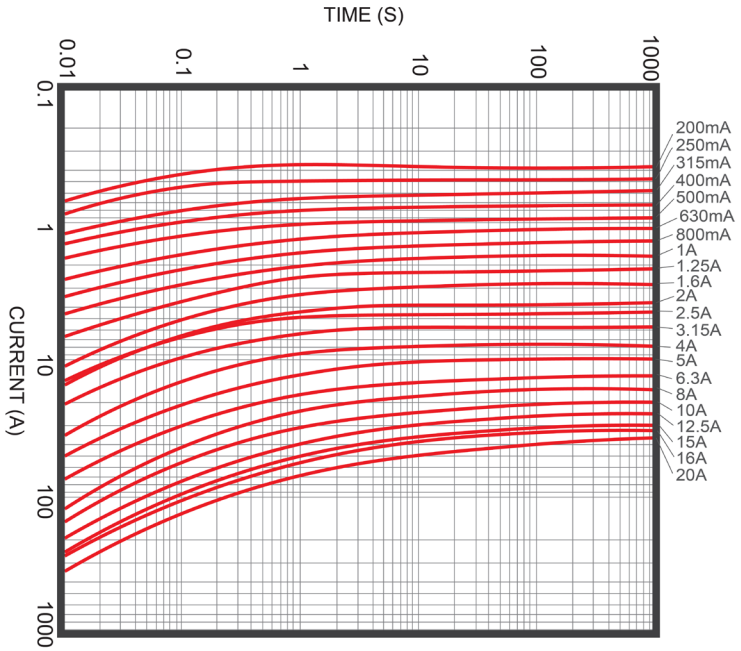


| % of Rated Current | Current Rating | Min Hold Time | Max Hold Time |
|---|---|---|---|
| 210% | 100mA-4A | - | 30 min |
| 275% | | 10ms | 2s |
| 400% | | 3ms | 300ms |
| 1000% | | - | 20ms |
| 210% | >4A-6.3A | - | 30 min |
| 275% | | 10ms | 3s |
| 400% | | 3ms | 300ms |
| 1000% | | - | 20ms |
| 210% | >6.3A-10A | - | 30 min |
| 275% | | 40ms | 20s |
| 400% | | 10ms | 1s |
| 1000% | | - | 30ms |
| 210% | >10A | - | 30min |
| 275% | | 40ms | 20s |
| 400% | | 10ms | 1s |
| 1000% | | - | 40ms |

## Temperature De-Rating Curve

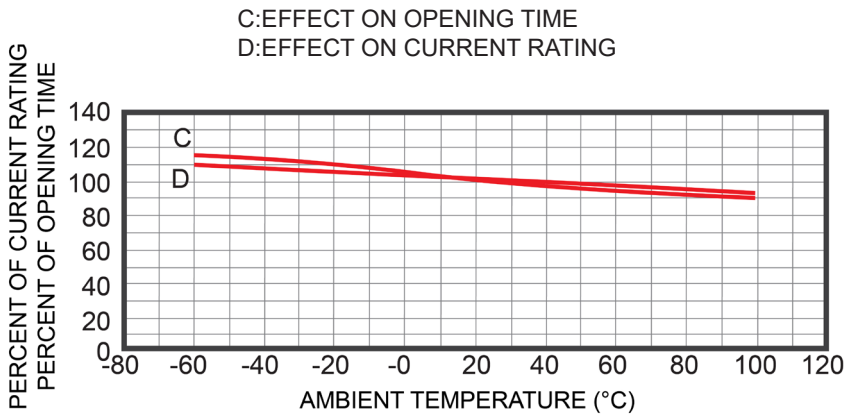


(II) Effect on rating and opening time in 5In of fast blow and slow-blow fuse



Downloaded from Arrow.com.

## Blister Pack: Inches [mm]

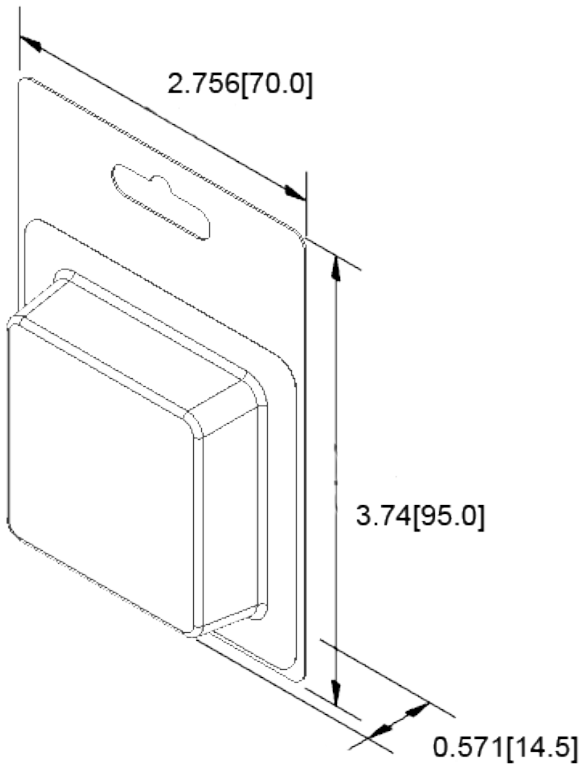


## Pill Box: Inches [mm]

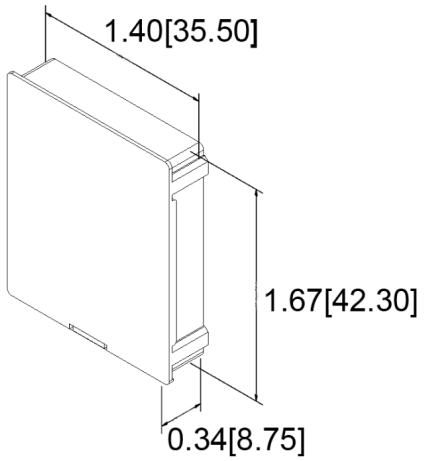


## Retail Pack Part Number Information

| Ampere Rating | Retail Pack # Blister Card (5PCS) | Retail Pack # Pill Box (5PCS) |
|---|---|---|
| 250mA | FCD-250mA-BP | FCD-250mA-BX |
| 315mA | FCD-315mA-BP | FCD-315mA-BX |
| 400mA | FCD-400mA-BP | FCD-400mA-BX |
| 500mA | FCD-500mA-BP | FCD-500mA-BX |
| 630mA | FCD-630mA-BP | FCD-630mA-BX |
| 800mA | FCD-800mA-BP | FCD-800mA-BX |
| 1A | FCD-1A-BP | FCD-1A-BX |
| 1.25A | FCD-1.25A-BP | FCD-1.25A-BX |
| 1.6A | FCD-1.6A-BP | FCD-1.6A-BX |
| 2A | FCD-2A-BP | FCD-2A-BX |
| 2.5A | FCD-2.5A-BP | FCD-2.5A-BX |
| 3.15A | FCD-3.15A-BP | FCD-3.15A-BX |
| 4A | FCD-4A-BP | FCD-4A-BX |
| 5A | FCD-5A-BP | FCD-5A-BX |
| 6.3A | FCD-6.3A-BP | FCD-6.3A-BX |
| 8A | FCD-8A-BP | FCD-8A-BX |
| 10A | FCD-10A-BP | FCD-10A-BX |
| 12.5A | FCD-12.5A-BP | FCD-12.5A-BX |
| 15A | FCD-15A-BP | FCD-15A-BX |
| 16A | FCD-16A-BP | FCD-16A-BX |

* Retail packs are for cartridge style fuses only

| Rev | Date of issue | Revision Notes | Designed | Approved |
|---|---|---|---|---|
| O | 12-11-2025 | Updated Amperages | RC | OF |



Downloaded from Arrow.com.