MMC

Digital Motor Protection Relay

Three phase protection for AC motors.



Application

- 3 phase AC motor protection

Protection and Control

- Unbalance or current reversal
- Thermal protection
- Phase and ground fault
- Locked rotor
- Undercurrent
- Successive starts

Features

- RS485, RS232 or fiber comm. available
- Equipment alarm, thermal alarm, trip
- I_1, I_2, I_0 metering and last trip data
- Part of a modular system
- Independent 4" modules
- 1/4 standard 19" rack case available
- 3 digit display and push-buttons

DESCRIPTION

Type MMC 1000 digital relays are microprocessor-based motor protectors that provide thermal protection for three phase AC motors, protection against phase to phase faults, phase to ground faults, single phase starts, excessively long starts, locked rotor and provide the additional optional functions of undercurrent and successive starts.

APPLICATION

The basic functions performed by the MMC are:

- 46 - protection against unbalance or current reversal (negative sequence)
- 49 - thermal protection
- 50 - protection against phase faults
- 51G - protection against faults to ground
- 51LR - protection against locked rotor
- 37 - undercurrent unit
- 66 - successive starts unit

The thermal image unit also provides protection against frequent starts since once a trip output is produced, the thermal unit doesn't reset until the motor temperature decreases below a given value.

CONSTRUCTION

- accurate and reliable, with low power consumption
- fixed rack mounting, 4 rack units high, 1/4 of a rack wide
- LED indicators for pick up, trip, and system availability
- three digit display, where the following data are shown:
  - F0. actual state of the equipment
  - F1. thermal state (%)
  - F2. positive sequence current (xIs)
  - F3. negative sequence current (xIs)
  - F4. zero sequence current (xInGRN)
  - F5. last trip (cause)
  - F6. I_1 during last trip
  - F7. I_2 during last trip
  - F8. I_0 during last trip
- sealable plastic cover, antishock, and flame resistant, that allows the trip indicator to be reset from outside the cover
- shock resistant output relays, high reliability solid state components
- microprocessor system

STANDARD FUNCTIONS

Thermal Image Unit (Is)

Adjustable between 0.4 and 1.4 times I_n in steps of 0.05 times I_n, through micro-switches located on the front of the relay.

Selectable operating curves as a function of the time constant (t_1), adjustable between 3 and 60 min in 3 min steps.

Negative sequence compensation (K1), adjustable from 1 to 6.

Cool down time constant (t_2), adjustable from 1 to 6 times the heating constant.

Positive Sequence Unit (I_1)

Adjustable between 3 and 12 times the value selected for the thermal unit.

Time delay adjustable between 50 and 100 ms in 5 ms steps.

Negative Sequence Unit (I_2)

The unit can function as an instantaneous unit with an adjustable time, or according to an inverse time curve. The mode of operation can be selected by the user.

MULTILIN

Downloaded from Arrow.com.

STANDARD FUNCTIONS

Instantaneous Mode (Adjustable): 0.5-8 times I_S in steps of 0.1 times I_S with time delay of 0.05 to 10 sec in steps of 0.05 sec.
Inverse Time Mode: according to the family of curves in Fig. 2, beginning with starting values selectable between 0.2-1.0 times I_S in steps of 0.1 times I_S.

Zero Sequence Unit (I_0)

Adjustable between 0.06 and 0.24 times InGRN – 1, 5 or 0.02 A.

Time delay 0.05-10 sec, adjustable in steps of 0.05 sec.

Locked Rotor Unit

Adjustable between 1 and 4 times the value selected for the thermal unit, in steps of 0.1 times. Time delay between 1 to 60 sec, in 1 sec steps.

Undercurrent Unit

Adjustable between 20-80% I_n, with a time delay between 0.1-10 sec, in steps of 0.1.

Fig. 1. Cold thermal curve (t = 180 sec)

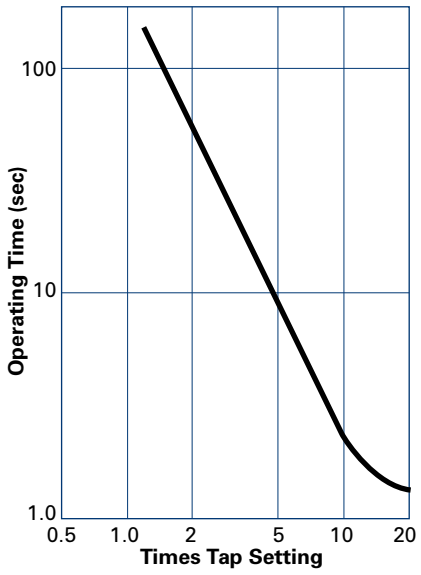

Fig. 2. Operating curve for the negative sequence unit

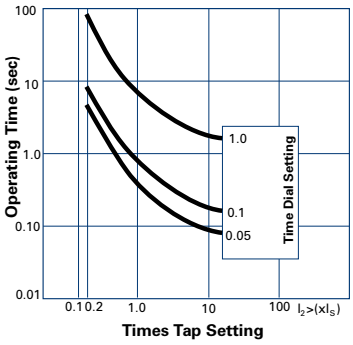

Successive Starts Unit

This unit allows a number of starts from 1 to 10, with times between each start adjustable between 10 to 100 min.

Blocking time upon completing the fixed number of starts is adjustable between 10 to 100 min, in steps of 1 min.

SETTINGS

All settings except the thermal image are made with three push buttons on the front of the relay: +; –; ENTER. The selected value can be seen on the display.

All the functions, except the thermal unit, can be inhibited by the user.

CONNECTION DIAGRAM

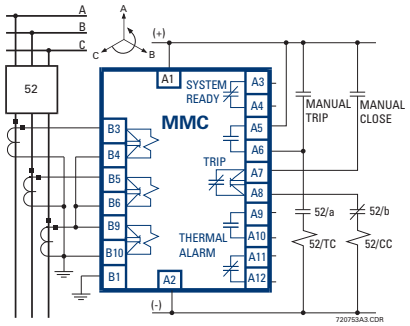

TECHNICAL SPECIFICATIONS

RATINGS

Nominal Frequency:	50/60 Hz
Nominal Phase Current (I_n):	1 A or 5 A
Nominal Ground Current (InGRN):	1, 5 or 0.02 A (this last value is recommended for use with toroidal current transformers)
Auxiliary Power Supply:	24-48 VDC/VAC 48-125 VDC/VAC 110-240 VDC/110-220 VAC (±20%)
Consumption:	Less than 1.5 W at all voltages

ENVIRONMENTAL

Temperature Ranges:	
Operating:	-10°C to +55°C
Storage:	-40°C to +65°C
Relative Humidity:	up to 95% without condensating

ACCURACY

Operating Values:	±5%.
Operating Times:	±5% or 0.025 sec (whichever is greater), E-5 class

REPEATABILITY

Operating Values:	±1%.
Operating Times:	±2% or 0.025 sec (whichever is greater)

CONTACT DATA

MMC relays have two trip contacts available, one normally open, and another electrically separate, normally closed (for motors and a contactor).
One contact is supplied (NC) for equipment alarm, and two contacts more (NO + NC) are provided to warn that temperature is at 80%.

Making Capacity:	5 A DC, for 30 sec with a max of 250 VDC
Break Rating:	25 W inductive and 250 VDC max
Continuous Rating:	3A.

THERMAL RATING OF THE CURRENT CIRCUITS

Continuous:	2 x I_n
Three Sec:	50 x I_n
One Sec:	100 x I_n

CURRENT CIRCUIT BURDENS

Model:	**Burden:**
I_n = 5A	0.3 VA
I_n= 1A	0.3 VA
I_n = 0.02A	0.08 VA

STANDARDS AND TYPE TESTS

Insulation Test:	2 kV, 50/60 Hz, for one min per IEC 255-5
Impulse Test:	5 kV peak, 1.2/50 µsec, 0.5 J, per IEC 2554
Interference Test:	2.5 kV longitudinal, 1kV transversal, Class III, per IEC 255-4
Electrostatic Discharge:	Per IEC 801-2, Class III
Radio Interference:	Per IEC 801-3, Class III
Rapid Transient:	Per IEC 801-4, Class III

PHYSICAL

Weight:	
Net:	8.8 lbs (4 kg)
Shipping:	11 lbs (5 kg)

APPROVAL

CE Compliant — UL - UL listed for USA and Canada

Specifications subject to change without notice.

ORDERING

To order select the basic model and the desired features from the Selection Guide below.

MMC10 * 0D010 * 00 *

MMC10			Digital motor protection relay
	0		5 A phase CT, 5 A ground CT
	1		5 A phase CT, 1 A ground CT
	2		5 A phase CT, 0.02 A ground CT (this model should be used only with toroidal type CTs, for the neutral current display; for more details refer to the instruction book)
	3		1 A phase CT, 1 A ground CT
		F	24-48 VDC/VAC auxiliary voltage
		G	48-125 VDC/VAC auxiliary voltage
		H	110-240 VDC/110-220 VAC auxiliary voltage
		C	Individual housing
		S	As part of an MID system

Downloaded from Arrow.com.