AC-DC Power Supplies Medical Type

COSEL

Medical electric equipment | Power Factor Correction | World wide | Safety Approvals | EMI | Inrush current limiting | OCP | OVP | Remote ON/OFF | 1U

GHA-series

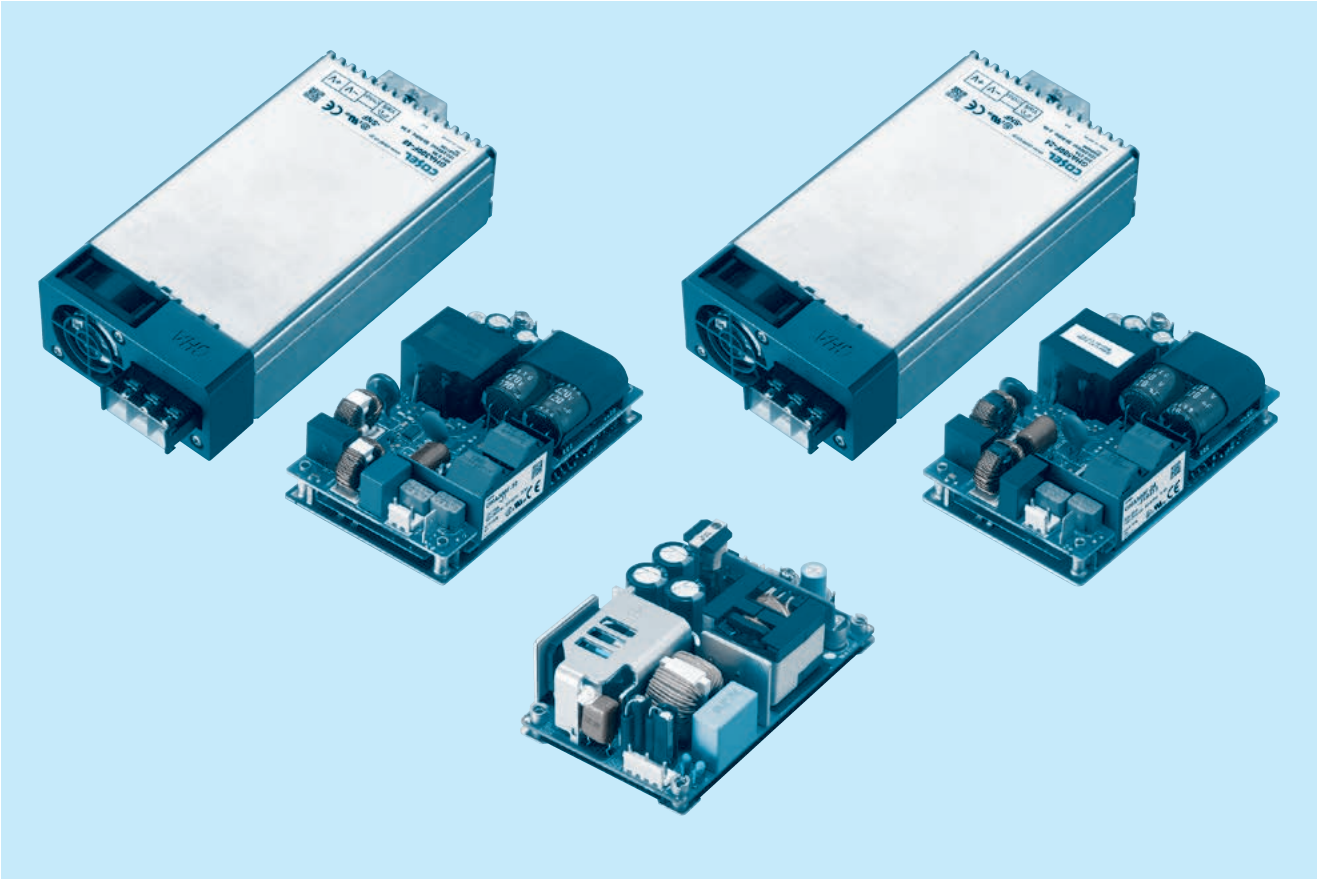

Feature

Wattage 700Wmax
Conduction cooling (GHA500F, GHA700F)
3"×5"standard footprint
Less than 1U high
ITE and Medical safety approvals
Low leakage current
Suitable for BF application
(Output-FG : 1MOPP, Input-Output :2MOPP) (GHA700F)
With Remote (Option)
With AUX1 (12V) (Optional Excluding GHA700F-12)
With AUX2 (5V) (Optional)
With FAN (GHA300F-SNF, GHA500F-SNF)

Safety agency approvals

UL60950-1 (GHA300F, 500F), UL62368-1 (GHA700F)
ANSI/AAMI ES60601-1, C-UL
EN62368-1, EN60601-1 3rd
Complies with IEC60601-1-2 4th
DEN-AN
EN61558-2-16 (GHA700F)

5-year warranty (Refer to Instruction Manual)

CE marking

Low Voltage Directive
RoHS Directive

UKCA marking

Electrical Equipment Safety Regulations
RoHS Regulations

EMI

Complies with FCC-B, CISPR11-B, CISPR32-B, EN55011-B
EN55032-B, VCCI-B

EMS Compliance : EN61204-3,EN61000-6-2
IEC60601-1-2 (2014), EN60601-1-2 (2015)

EN61000-4-2
EN61000-4-3
EN61000-4-4
EN61000-4-5
EN61000-4-6
EN61000-4-8
EN61000-4-11

Downloaded from Arrow.com.

COSEL AC-DC Power Supplies Medical Type

GHA300F

Ordering information

GH	A	300	F	-□□	-□
①	②	③	④	⑤	⑥

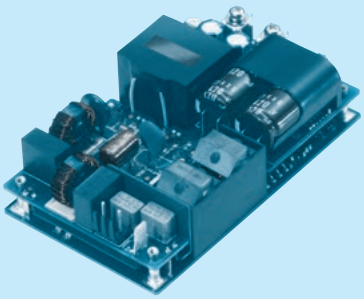

Example recommended EMI/EMC filter
EAC-10-472

High voltage pulse noise type : EAP series
Low leakage current type : EAM series

*A higher current rating EMI/EMC filter may be recommended in view of the other devices that could be connected in parallel with the power supply.

①Series name
②Single output
③Output wattage
④Universal input
⑤Output voltage
⑥Optional *6
T3 : mounting hole M3
J1 : J.S.T.connector type
J3 : Horizontal input connector J.S.T.connector type
R3 : with Subfeatures (5VAUX,12VAUX,Remote, Power good)(Molex connector type)
*with friction locks,J2R3

Specification is changed at option, refer to Instruction manual.

This power supply is manufactured by SMD technology. The stress to P.C.B like twisting or bending causes the defect of the unit, please handle the unit with care
*Make sure necessary tests will be carried out on your end equipment with the power supply installed in accordance with any required EMC/EMI regulations.

MODEL			GHA300F-12	GHA300F-24	GHA300F-48
MAX OUTPUT WATTAGE[W]			300	300	302.4
DC OUTPUT	Forced air	at 50℃	12V 25A	24V 12.5A	48V 6.3A
	Convection	at 40℃	12V 8.4A	24V 4.2A	48V 2.1A
		at 50℃	12V 4.5A	24V 2.2A	48V 1.1A

SPECIFICATIONS

	MODEL		GHA300F-12	GHA300F-24	GHA300F-48
INPUT	VOLTAGE[V]		AC90 - 264 1φ (output derating is required at AC90V -115V *3)		
	CURRENT[A]	ACIN 120V	3.3typ		
		ACIN 230V	1.8typ		
	FREQUENCY[Hz]		50 / 60 (47 - 63)		
	EFFICIENCY[%]	ACIN 120V	89typ	90typ	90typ
		ACIN 230V	91typ	92typ	92typ
	POWER FACTOR (Io=100%)	ACIN 120V	0.95typ		
		ACIN 230V	0.90typ		
	INRUSH CURRENT[A]	ACIN 120V	20typ (Io=100%) (At cold start) (Ta=25℃)		
		ACIN 230V	40typ (Io=100%) (At cold start) (Ta=25℃)		
	LEAKAGE CURRENT[mA]		0.125/0.250max (ACIN 120V/240V 60Hz,Io=100%, According to IEC60601-1)		
OUTPUT	VOLTAGE[V]		12	24	48
	CURRENT[A]	Forced air	25.0	12.5	6.3
		Convection	4.5	2.2	1.1
	LINE REGULATION[mV] *4		48max	96max	192max
	LOAD REGULATION[mV] *4		100max	150max	240max
	RIPPLE[mVp-p] *1	0 to +50℃	240max	240max	300max
		-20 to 0℃	320max	320max	400max
	RIPPLE NOISE[mVp-p] *1	0 to +50℃	300max	300max	480max
		-20 to 0℃	360max	360max	500max
	TEMPERATURE REGULATION[mV]	0 to +50℃	120max	240max	480max
		-20 to +50℃	150max	290max	600max
	DRIFT[mV] *2		48max	96max	192max
	START-UP TIME[ms]		500typ (ACIN 120V, Io=100%)		
	HOLD-UP TIME[ms]		16typ (ACIN 120V, Io=100%)		
	OUTPUT VOLTAGE ADJUSTMENT RANGE[V]		10.80 to 13.20	21.60 to 26.40	43.20 to 52.80
	OUTPUT VOLTAGE SETTING[V]		12.00 to 12.48	24.00 to 24.96	48.00 to 49.92
PROTECTION CIRCUIT AND OTHERS	OVERCURRENT PROTECTION		Works over 105% of rating and recovers automatically		
	OVERVOLTAGE PROTECTION[V]		13.80 to 16.80	27.60 to 33.60	55.20 to 67.20
	AUX1 (12V1A)		Optional		
	AUX2 (5V1A)		Optional		
	REMOTE ON/OFF		Optional		
	PowerGood		Optional		
ISOLATION	INPUT-OUTPUT · RC · AUX *7		AC4,000V 1minute, Cutoff current = 10mA, DC500V 50MΩ min (At Room Temperature) 2MOPP		
	INPUT-FG		AC2,000V 1minute, Cutoff current = 10mA, DC500V 50MΩ min (At Room Temperature) 1MOPP		
	OUTPUT · RC · AUX-FG *7		AC500V 1minute, Cutoff current = 25mA, DC500V 50MΩ min (At Room Temperature)		
	OUTPUT-RC · AUX *7		AC500V 1minute, Cutoff current = 25mA, DC500V 50MΩ min (At Room Temperature)		
ENVIRONMENT	OPERATING TEMP.,HUMID.AND ALTITUDE		-20 to +70℃, 20 - 90%RH (Non condensing), 3,000m (10,000feet) max *3		
	STORAGE TEMP.,HUMID.AND ALTITUDE		-30 to +75℃, 20 - 90%RH (Non condensing), 9,000m (30,000feet) max		
	VIBRATION		10 - 55Hz, 19.6m/s² (2G), 3minutes period, 60minutes each along X, Y and Z axis		
	IMPACT		196.1m/s² (20G), 11ms, once each X, Y and Z axis		
SAFETY AND NOISE REGULATIONS	AGENCY APPROVALS		UL60950-1, ANSI/AAMI ES60601-1, C-UL(CSA60950-1, CAN/CSA60601-1), EN62368-1, EN60601-1 3rd, Complies with DEN-AN, IEC60601-1-2 4th Ed.		
	CONDUCTED NOISE		Complies with FCC-B, VCCI-B, CISPR11-B, CISPR22-B, EN55011-B, EN55022-B		
	HARMONIC ATTENUATOR		Complies with IEC61000-3-2 (class A) *5		
OTHERS	CASE SIZE/WEIGHT		76.2×35×127mm [3.0×1.4×5.0 inches] (W×H×D) / 400g max		
	COOLING METHOD		Convection, Forced air (Require external fan)		

*1 This is the value that measured on measuring board with capacitor of 22μF at 150mm from output terminal.
Measured by 20MHz oscilloscope or Ripple-Noise meter (Equivalent to KEISOKU-GIKEN: RM103).
*2 Drift is the change in DC output for an eight hour period after a half-hour warm-up at 25℃, with the input voltage held constant at the rated input/output.
*3 Derating is required.
*4 Please contact us about dynamic load and input response.
*5 Please contact us about another class.
*6 Specification is changed at option, refer to Instruction Manual.
*7 Applicable when AUX and remote control (optional) is added.
* To meet the specifications. Do not operate over-loaded condition.
* Sound noise may be generated by power supply in case of pulse load.
* Parallel operation is not possible.
* Forced air cooling is required to output up to MAX OUTPUT WATTAGE.
* Bottom layer P.C.B has electric potential which is required isolation from FG by clearance or creepage as the safety design issue.

Downloaded from Arrow.com.

Features

- High Power density:14.3W/inch³
- 3"× 5"standard footprint
- Industrial and Medical safety approvals
- With Remote On/Off (Optional)
- No minimum load is required
- High efficiency 92% typ (Input Voltage 230V, Output Voltage 24V)
- Fits 1U applications
- Low leakage current
- With AUX1 (12V), AUX2 (5V) (Optional)

Block diagram

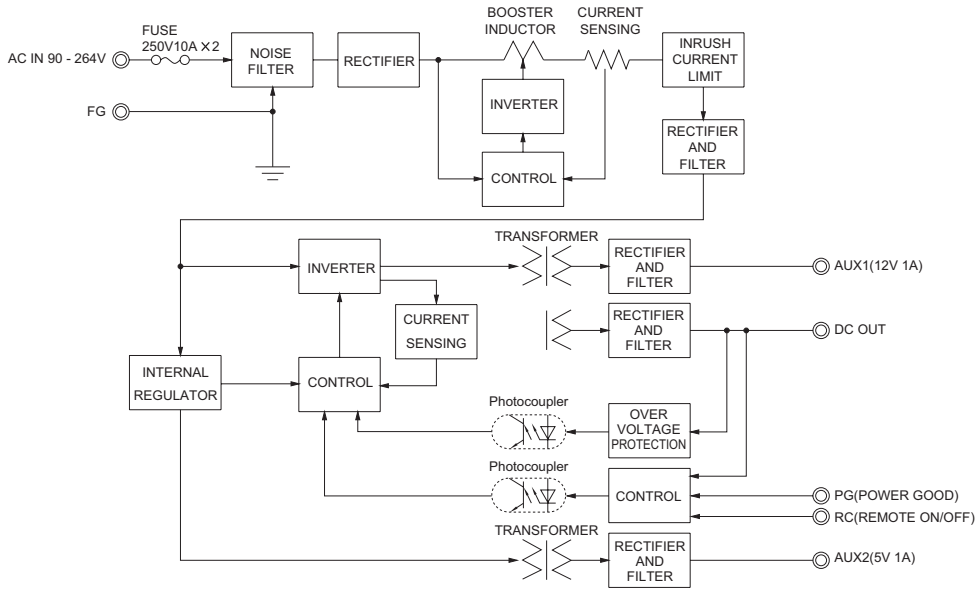

External view

＊External size of option J3 is different from standard model and refer to 6 Option and Others of instruction manual for details.

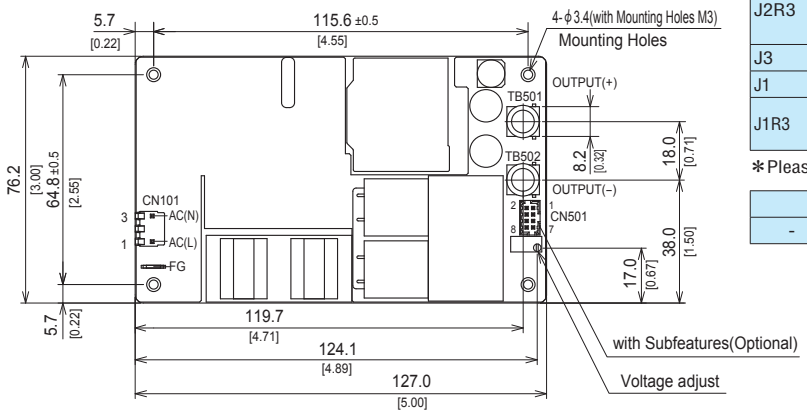

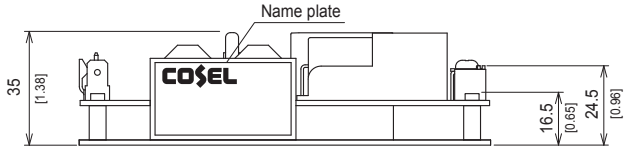

※ Tolerance ±1 [±0.04]
※ Weight : 400g max
※ There is a total of four attachment holes.
※ This power supply requires mounting on metal standoffs 5mm in height. (Insulating sheet is required if you do not use a spacer).
※ Dimensions in mm, [ ]=inches
※ Screw tightening torque : (TB501, 502) : 1.5N・m max
※ Mounting toque : 0.6N・m max
※ Avoid contact between TB501 and 502 wiring with mounting parts.
※ Option : -J1 : (J.S.T) connector type. Refer to Instruction Manual 6.

Connector			Mating connector	Terminal	Mfr
Standard	CN101	A-41671-A03A197-2	09-50-8031	08-50-0105 08-65-0114	Molex ＊
R3	CN101				
	CN501	087831-0820	51110-0851	50394-8051	
J2R3	CN101	A-41671-A03A197-2	09-50-8031	08-50-0105 08-65-0114	
	CN501	087831-0841	51110-0860	50394-8051	
J3	CN101	S2P3-VH	VHR-3N	SVH-21T-P1.1	J.S.T.
J1	CN101	B2P3-VH			
J1R3	CN101				
	CN501	B8B-PHDSS	PHDR-08VS	SPHD-002T-P0.5	

＊Please note the pin position No.1 is different from Molex.

FG		Mating connector	Terminal	Mfr
-	250 Series	-	170603-2	Tyco Electronics

<Pin Assignments>

<CN101>

Pin No.	Input
1	AC(L)
2	
3	AC(N)

<CN501(Optional)>

Pin No.	Function
1	AUX1 : AUX1 (12V1A)
2	AUX1G : AUX1 (GND)
3	RC : REMOTE ON/OFF
4	RCG : REMOTE ON/OFF (GND)
5	PG : Power good
6	PGG : Power good (GND)
7	AUX2 : AUX2 (5V1A)
8	AUX2G : AUX2 (GND)

CN501

Downloaded from Arrow.com.

COSEL AC-DC Power Supplies Medical Type

GHA500F

Ordering information

GH	A	500	F	-□□	-□
①	②	③	④	⑤	⑥

RoHS

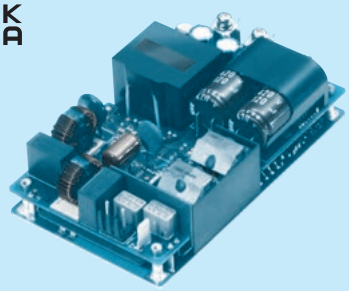

Example recommended EMI/EMC filter
EAC-10-472

High voltage pulse noise type : EAP series
Low leakage current type : EAM series

*A higher current rating EMI/EMC filter may be recommended in view of the other devices that could be connected in parallel with the power supply.

①Series name
②Single output
③Output wattage
④Universal input
⑤Output voltage
⑥Optional *6
T3 : mounting hole M3
J1 : J.S.T.connector type
J3 : Horizontal input connector J.S.T.connector type
R3 : with Subfeatures (5VAUX,12VAUX,Remote, Power good)(Molex connector type)
*with friction locks,J2R3
P : Parallel Operation

Specification is changed at option, refer to Instruction manual.

This power supply is manufactured by SMD technology. The stress to P.C.B like twisting or bending causes the defect of the unit, please handle the unit with care
*Make sure necessary tests will be carried out on your end equipment with the power supply installed in accordance with any required EMC/EMI regulations.

MODEL			GHA500F-12	GHA500F-15	GHA500F-24	GHA500F-30	GHA500F-48	GHA500F-56
MAX OUTPUT WATTAGE[W]			500.4	501	504	501	504	504
DC OUTPUT	Forced air	at 50℃	12V 41.7A	15V 33.4A	24V 21.0A	30V 16.7A	48V 10.5A	56V 9.0A
	Convection	at 40℃	12V 12.5A	15V 10.0A	24V 6.3A	30V 5.0A	48V 3.2A	56V 2.7A
		at 50℃	12V 9.2A	15V 7.4A	24V 4.6A	30V 3.7A	48V 2.3A	56V 1.9A
	conduction cooling	at 0℃	12V 30.0A	15V 24.0A	24V 15.0A	30V 12.0A	48V 7.5A	56V 6.4A
		at 50℃	12V 16.7A	15V 13.4A	24V 8.4A	30V 6.7A	48V 4.2A	56V 3.6A

SPECIFICATIONS

	MODEL		GHA500F-12	GHA500F-15	GHA500F-24	GHA500F-30	GHA500F-48	GHA500F-56
INPUT	VOLTAGE[V]		AC90 - 264 1φ (output derating is required at AC90V -115V *3)					
	CURRENT[A]	ACIN 120V	5.4typ					
		ACIN 230V	2.9typ					
	FREQUENCY[Hz]		50 / 60 (47 - 63)					
	EFFICIENCY[%]	ACIN 120V	88typ	90typ	90typ	90typ	90typ	90typ
		ACIN 230V	90typ	92typ	92typ	92typ	92typ	92typ
	POWER FACTOR (Io=100%)	ACIN 120V	0.95typ					
		ACIN 230V	0.90typ					
	INRUSH CURRENT[A]	ACIN 120V	20typ (Io=100%) (At cold start) (Ta=25℃)					
		ACIN 230V	40typ (Io=100%) (At cold start) (Ta=25℃)					
	LEAKAGE CURRENT[mA]		0.125/0.250max (ACIN 120V/240V 60Hz,Io=100%, According to IEC60601-1)					
OUTPUT	VOLTAGE[V]		12	15	24	30	48	56
	CURRENT[A]	Forced air	41.7	33.4	21.0	16.7	10.5	9.0
		Convection	9.2	7.4	4.6	3.7	2.3	1.9
		conduction cooling	16.7	13.4	8.4	6.7	4.2	3.6
	LINE REGULATION[mV] *4		48max	60max	96max	120max	192max	192max
	LOAD REGULATION[mV] *4		100max	120max	150max	180max	240max	240max
	RIPPLE[mVp-p] *1	0 to +50℃	240max	240max	240max	300max	300max	400max
		-20 - 0℃	320max	320max	320max	400max	400max	500max
	RIPPLE NOISE[mVp-p] *1	0 to +50℃	300max	300max	300max	480max	480max	500max
		-20 - 0℃	360max	360max	360max	500max	500max	580max
	TEMPERATURE REGULATION[mV]	0 to +50℃	120max	150max	240max	300max	480max	480max
		-20 to +50℃	150max	180max	290max	360max	600max	600max
	DRIFT[mV]	*2	48max	60max	96max	120max	192max	192max
	START-UP TIME[ms]		500typ (ACIN 120V, Io=100%)					
	HOLD-UP TIME[ms]		16typ (ACIN 120V, Io=100%)					
	OUTPUT VOLTAGE ADJUSTMENT RANGE[V]		10.80 to 13.20	13.50 to 16.50	21.60 to 26.40	27.00 to 31.50	43.20 to 52.80	52.00 to 56.00
	OUTPUT VOLTAGE SETTING[V]		12.00 to 12.48	15.00 to 15.30	24.00 to 24.96	30.00 to 31.20	48.00 to 49.92	55.00 to 56.00
PROTECTION CIRCUIT AND OTHERS	OVERCURRENT PROTECTION		Works over 105% of rating and recovers automatically					
	OVERVOLTAGE PROTECTION[V]		13.80 to 16.80	17.25 to 21.00	27.60 to 33.60	34.50 to 42.00	55.20 to 67.20	60.00 to 69.00
	AUX1 (12V1A)		Optional					
	AUX2 (5V1A)		Optional					
	REMOTE ON/OFF		Optional					
	PowerGood		Optional					
ISOLATION	INPUT-OUTPUT · RC · AUX *7		AC4,000V 1minute, Cutoff current = 10mA, DC500V 50MΩ min (At Room Temperature) 2MOPP					
	INPUT-FG		AC2,000V 1minute, Cutoff current = 10mA, DC500V 50MΩ min (At Room Temperature) 1MOPP					
	OUTPUT · RC · AUX-FG *7		AC500V 1minute, Cutoff current = 25mA, DC500V 50MΩ min (At Room Temperature)					
	OUTPUT-RC · AUX *7		AC500V 1minute, Cutoff current = 25mA, DC500V 50MΩ min (At Room Temperature)					
ENVIRONMENT	OPERATING TEMP.,HUMID.AND ALTITUDE		-20 to +80℃, 20 - 90%RH (Non condensing), 3,000m (10,000feet) max					
	STORAGE TEMP.,HUMID.AND ALTITUDE		-30 to +80℃, 20 - 90%RH (Non condensing), 9,000m (30,000feet) max					
	VIBRATION		10 - 55Hz, 19.6m/s² (2G), 3minutes period, 60minutes each along X, Y and Z axis					
	IMPACT		196.1m/s² (20G), 11ms, once each X, Y and Z axis					
SAFETY AND NOISE REGULATIONS	AGENCY APPROVALS		UL60950-1, ANSI/AAMI ES60601-1, C-UL(CSA60950-1, CAN/CSA60601-1), EN62368-1, EN60601-1 3rd, Complies with DEN-AN, IEC60601-1-2 4th Ed.					
	CONDUCTED NOISE		Complies with FCC-B, VCCI-B, CISPR11-B, CISPR22-B, EN55011-B, EN55022-B					
	HARMONIC ATTENUATOR		Complies with IEC61000-3-2 (class A) *5					
OTHERS	CASE SIZE/WEIGHT		76.2×35×127mm [3.0×1.4×5.0 inches] (W×H×D) / 420g max					
	COOLING METHOD		Convection, Forced air (Require external fan), Conduction cooling					

*1 This is the value that measured on measuring board with capacitor of 22μF at 150mm from output terminal.
Measured by 20MHz oscilloscope or Ripple-Noise meter (Equivalent to KEISOKU-GIKEN: RM103).
*2 Drift is the change in DC output for an eight hour period after a half-hour warm-up at 25℃, with the input voltage held constant at the rated input/output.
*3 Derating is required.
*4 Please contact us about dynamic load and input response.
*5 Please contact us about another class.
*6 Specification is changed at option, refer to Instruction Manual.
*7 Applicable when AUX and remote control (optional) is added.
* To meet the specifications. Do not operate over-loaded condition.
* Sound noise may be generated by power supply in case of pulse load.
* Parallel operation is available with -P option. Refer to 5.1on the instruction manual.
* Forced air cooling is required to output up to MAX OUTPUT WATTAGE.

Downloaded from Arrow.com.

Features

- Wattage 500W max
- High efficiency 92% typ (Input Voltage 230V,Output Voltage 24V)
- Conduction cooling
- Fits 1U applications
- Low leakage current
- With AUX1 (12V), AUX2 (5V) (Optional)
- High Power density:24.1W/inch³
- 3"× 5"standard footprint
- Industrial and Medical safety approvals
- With Remote On/Off (Optional)
- No minimum load is required

Block diagram

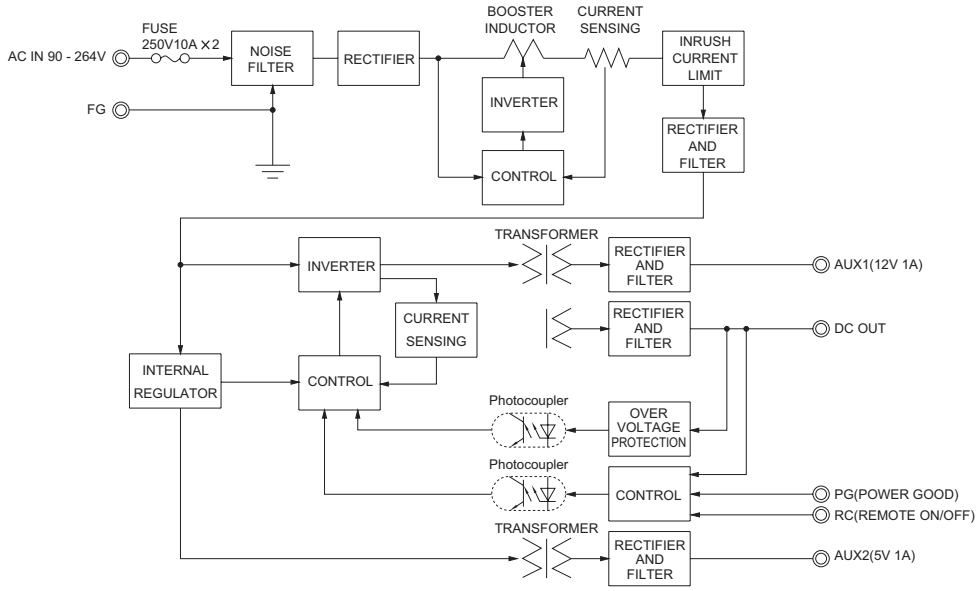

External view

＊External size of option J3 is different from standard model and refer to 6 Option and Others of instruction manual for details.

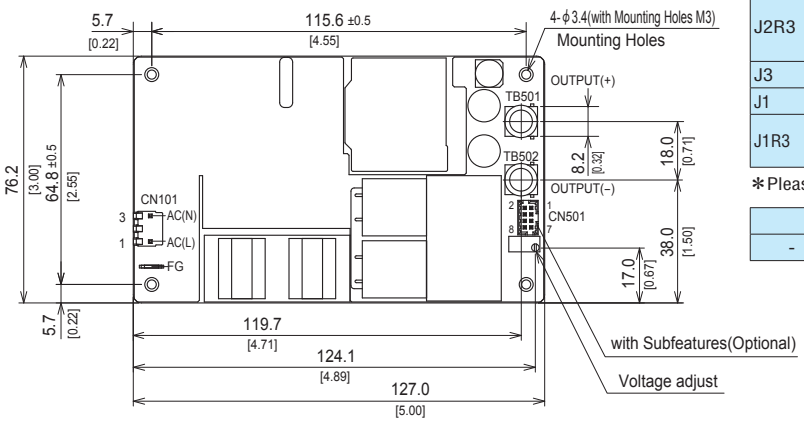

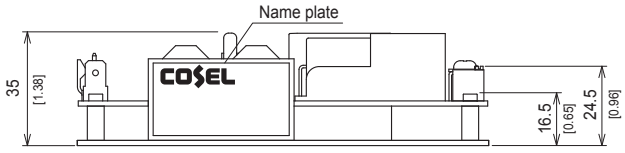

※ Tolerance ±1 [±0.04]
※ Weight : 420g max
※ There is a total of four attachment holes.
※ Base Plate : Aluminum
※ Dimensions in mm, [ ]=inches
※ Screw tightening torque : (TB501, 502) : 1.5N・m max
※ Mounting toque : 0.6N・m max
※ Avoid contact between TB501 and 502 wiring with mounting parts.
※ Option : -J1 : (J.S.T) connector type. Refer to Instruction Manual 6.

Connector			Mating connector	Terminal	Mfr
Standard	CN101	A-41671-A03A197-2	09-50-8031	08-50-0105 08-65-0114	Molex ＊
R3	CN101				
	CN501	087831-0820	51110-0851	50394-8051	
J2R3	CN101	A-41671-A03A197-2	09-50-8031	08-50-0105 08-65-0114	
	CN501	087831-0841	51110-0860	50394-8051	
J3	CN101	S2P3-VH	VHR-3N	SVH-21T-P1.1	J.S.T.
J1	CN101	B2P3-VH			
J1R3	CN101				
	CN501	B8B-PHDSS	PHDR-08VS	SPHD-002T-P0.5	

＊Please note the pin position No.1 is different from Molex.

FG		Mating connector	Terminal	Mfr
-	250 Series	-	170603-2	Tyco Electronics

<Pin Assignments>

<CN101>

Pin No.	Input
1	AC(L)
2	
3	AC(N)

<CN501(Optional)>

Pin No.	Function
1	AUX1 : AUX1 (12V1A)
2	AUX1G : AUX1 (GND)
3	RC : REMOTE ON/OFF
4	RCG : REMOTE ON/OFF (GND)
5	PG : Power good
6	PGG : Power good (GND)
7	AUX2 : AUX2 (5V1A)
8	AUX2G : AUX2 (GND)

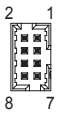

CN501

Downloaded from Arrow.com.

COSEL AC-DC Power Supplies Medical Type

GHA700F

Ordering information

GH A 700 F -□□ -□

① ② ③ ④ ⑤ ⑥

RoHS
2MOPP

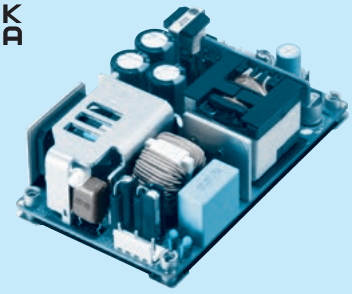

Example recommended EMI/EMC filter
EAC-16-472

High voltage pulse noise type : EAP series
Low leakage current type : EAM series

∗A higher current rating EMI/EMC filter may be recommended in view of the other devices that could be connected in parallel with the power supply.

■ BF

①Series name
②Single output
③Output wattage
④Universal input
⑤Output voltage
⑥Optional ∗1
C : with Coating
E : IEC Class Ⅱ
R3 : With Subfeatures (5VAUX, 12VAUX∗, Remote, Power good)
∗Excluding GHA700F-12
T3 : mounting hole M3
U1 : can attach an external capacitor unit

Specification is changed at option, refer to Instruction manual.

This power supply is manufactured by SMD technology. The stress to P.C.B like twisting or bending causes the defect of the unit, please handle the unit with care
∗Make sure necessary tests will be carried out on your end equipment with the power supply installed in accordance with any required EMC/EMI regulations.

MODEL			GHA700F-12-J1	GHA700F-24-J1	GHA700F-30-J1	GHA700F-48-J1	GHA700F-56-J1
MAX OUTPUT WATTAGE[W]			650.4	700.8	699.0	700.8	700.0
DC OUTPUT	Forced air	at 50℃	12V 54.2A	24V 29.2A	30V 23.3A	48V 14.6A	56V 12.5A
	Convection	at 30℃	12V 33.4A	24V 16.7A	30V 13.4A	48V 8.4A	56V 7.2A
		at 50℃	12V 22.2A	24V 11.1A	30V 8.9A	48V 5.6A	56V 4.8A
	conduction cooling	at 50℃	12V 33.4A	24V 16.7A	30V 13.4A	48V 8.4A	56V 7.2A

SPECIFICATIONS

	MODEL		GHA700F-12-J1	GHA700F-24-J1	GHA700F-30-J1	GHA700F-48-J1	GHA700F-56-J1
INPUT	VOLTAGE[VAC]		85 - 264 1φ (Refer to "Derating" and Instruction Manual 1.1)				
	CURRENT[A]	ACIN 115V	7.0typ				
		ACIN 230V	3.5typ				
	FREQUENCY[Hz]		50 / 60 (45 - 66)				
	EFFICIENCY[%]	ACIN 115V	94.0typ (Po=400W)	94.0typ (Po=400W)	94.0typ (Po=400W)	94.0typ (Po=400W)	94.0typ (Po=400W)
			92.5typ (Po=650W)	93.0typ (Po=700W)	93.0typ (Po=700W)	93.0typ (Po=700W)	93.0typ (Po=700W)
		ACIN 230V	95.5typ (Po=400W)	96.0typ (Po=400W)	96.0typ (Po=400W)	96.0typ (Po=400W)	96.0typ (Po=400W)
			94.5typ (Po=650W)	95.5typ (Po=700W)	95.5typ (Po=700W)	95.5typ (Po=700W)	95.5typ (Po=700W)
	POWER FACTOR (Po=700W)	ACIN 115V	0.95typ				
		ACIN 230V	0.90typ				
	INRUSH CURRENT[A] ∗2	ACIN 115V	20typ (At rated load) (At cold start) (Ta=25℃)				
		ACIN 230V	40typ (At rated load) (At cold start) (Ta=25℃)				
	EARTH LEAKAGE CURRENT[μA]		100/200max (ACIN 100/264V 60Hz, At rated load, According to IEC60601-1)				
	TOUCH CURRENT[μA]		100max (ACIN 264V 60Hz, At rated load, According to IEC60601-1)				
OUTPUT	VOLTAGE[VAC]		12	24	30	48	56
	CURRENT[A]	Forced air	54.2	29.2	23.3	14.6	12.5
		Convection	33.4	16.7	13.4	8.4	7.2
		conduction cooling	33.4	16.7	13.4	8.4	7.2
	LINE REGULATION[mV] ∗3		48max	96max	120max	192max	192max
	LOAD REGULATION[mV] ∗3 ∗9		100max	150max	180max	240max	240max
	RIPPLE[mVp-p] ∗4 ∗10	0 to +50℃	240max	300max	350max	550max	600max
		-20℃ to +0℃	320max	400max	500max	700max	750max
	RIPPLE NOISE[mVp-p] ∗4 ∗10	0 to +50℃	300max	400max	450max	650max	700max
		-20℃ to +0℃	360max	500max	600max	800max	850max
	TEMPERATURE REGULATION[mV]	0 to +50℃	120max	240max	300max	480max	600max
		-20℃ to +50℃	150max	290max	360max	600max	720max
	DRIFT[mV]	∗5	48max	96max	120max	192max	192max
	START-UP TIME[ms]		500typ (ACIN 115V, At rated load)				
	HOLD-UP TIME[ms]		12typ (ACIN 115V, At rated load)				
	OUTPUT VOLTAGE ADJUSTMENT RANGE[V]		11.40 to 13.20	22.80 to 26.40	28.50 to 33.00	45.60 to 52.80	53.20 to 61.60
	OUTPUT VOLTAGE SETTING[V]		12.00 to 12.48	24.00 to 24.96	30.00 to 31.20	48.00 to 49.92	56.00 to 58.24
PROTECTION CIRCUIT AND OTHERS	OVERCURRENT PROTECTION		Works over 105% of rating and recovers automatically ∗6				
	OVERVOLTAGE PROTECTION[V]		13.80 to 16.80	27.60 to 33.60	34.50 to 42.00	55.20 to 67.20	64.40 to 78.40
	AUX1 (12V1A)		Optional (Refer to Instruction Manual 6.1) (Excluding GHA700F-12)				
	AUX2 (5V1A)		Optional (Refer to Instruction Manual 6.1)				
	REMOTE ON/OFF		Optional (Refer to Instruction Manual 6.1)				
	POWER GOOD		Optional (Refer to Instruction Manual 6.1)				
ISOLATION	INPUT-OUTPUT · RC · AUX ∗7		AC4,000V 1minute, Cutoff current = 10mA, DC500V 50MΩ min (At Room Temperature) 2MOPP				
	INPUT-FG		AC2,000V 1minute, Cutoff current = 10mA, DC500V 50MΩ min (At Room Temperature) 1MOPP				
	OUTPUT · RC · AUX-FG ∗7		AC1,500V 1minute, Cutoff current = 10mA, DC500V 50MΩ min (At Room Temperature) 1MOPP				
	OUTPUT-RC · AUX ∗7		AC500V 1minute, Cutoff current=25mA, DC500V 50MΩ min (At Room Temperature)				
ENVIRONMENT	OPERATING TEMP.,HUMID.AND ALTITUDE		-20 to +80℃, 20 - 90%RH (Non condensing), 3,000m (10,000feet) max				
	STORAGE TEMP.,HUMID.AND ALTITUDE		-30 to +80℃, 20 - 90%RH (Non condensing), 9,000m (30,000feet) max				
	VIBRATION		10 - 55Hz, 19.6m/s² (2G), 3minutes period, 60minutes each along X, Y and Z axis				
	IMPACT		196.1m/s² (20G), 11ms, once each X, Y and Z axis				
SAFETY AND NOISE REGULATIONS	AGENCY APPROVALS		UL62368-1, ANSI/AAMI ES60601-1,C-UL (equivalent to CAN/CSA-C22.2 No.62368-1, CAN/CSA-C22.2 No.60601-1), EN62368-1, EN60601-1 3rd, Complies with IEC60601-1-2 4th Ed., EN61558-2-16 (OVC Ⅲ), DEN-AN				
	CONDUCTED NOISE		Complies with FCC-B, VCCI-B, CISPR32-B, EN55011-B, EN55032-B				
	HARMONIC ATTENUATOR ∗8		Complies with IEC61000-3-2 (class A)				
OTHERS	CASE SIZE/WEIGHT		76.2×38.1×127mm [3×1.5×5] (W×H×D) / 570g max				
	COOLING METHOD		Convection, Forced air (Require external fan), Conduction cooling				

Downloaded from Arrow.com.

*1 The listed options may affect the published standard specifications.
Please contact us for detailed product specification.
*2 The current of input surge to a built-in EMI/EMS Filter (0.2ms or less) is excluded.
*3 In the case of dynamic fluctuations, the specifications may not be met.
*4 This is the value measured on measuring board with capacitor of 22μF and 0.1μF within 150mm from output terminal.
Measured by 20MHz Oscilloscope or Ripple-Noise meter (KEISOKU-GIKEN:RM-104).
*5 Drift is the change in DC output for an eight hours period after a half-hour warm-up at 25℃, with the input voltage held constant at the rated input/output.
*6 The output is shut down when the overcurrent protection continues.
*7 Applicable when AUX and remote control (optional) is added.
*8 Please contact us about another class.
*9 The value at Ta=-20℃ to +50℃.
*10 The value at rated load.
* To meet the specifications. Do not operate over-loaded condition.
* Parallel operation is not possible.
* Sound noise may be generated by power supply in case of pulse load.
* Forced air cooling is required to output up to MAX OUTPUT WATTAGE.

Features

- Wattage 700W max
- High efficiency 96% typ (Input Voltage 230V, Output Voltage 24V)
- 3"×5"standard footprint
- Industrial and Medical safety approvals (Suitable for BF application)
- With Remote On/Off (Optional)
- Isolated dual AUX (AUX1 12V 1A, AUX2 5V 1A) (Optional)
- High Power density:31.1W/inch³
- Conduction cooling
- Fits 1U applications
- Low leakage current
- Complies with EN61558-2-16 (OVC III)
- Conformal coating (Optional)

Block diagram

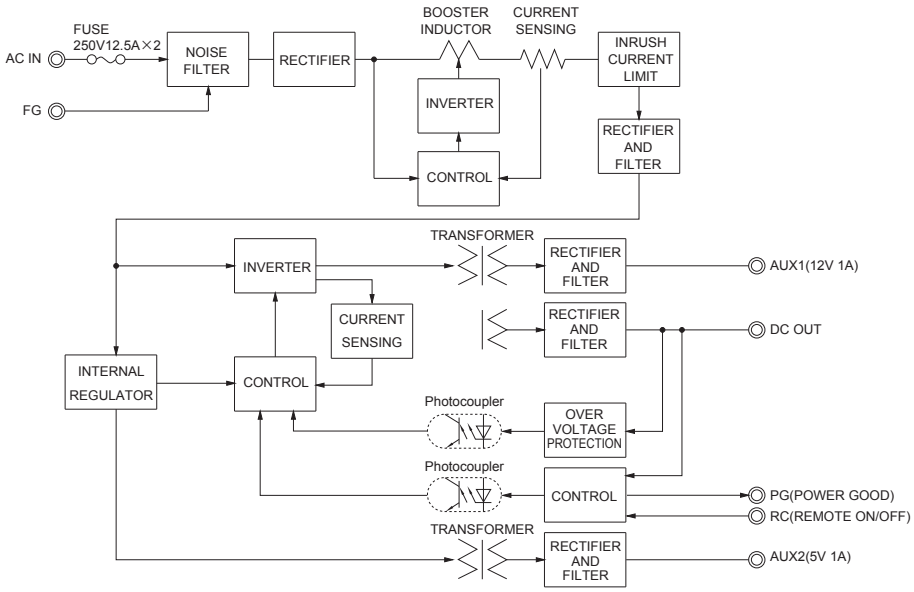

External view

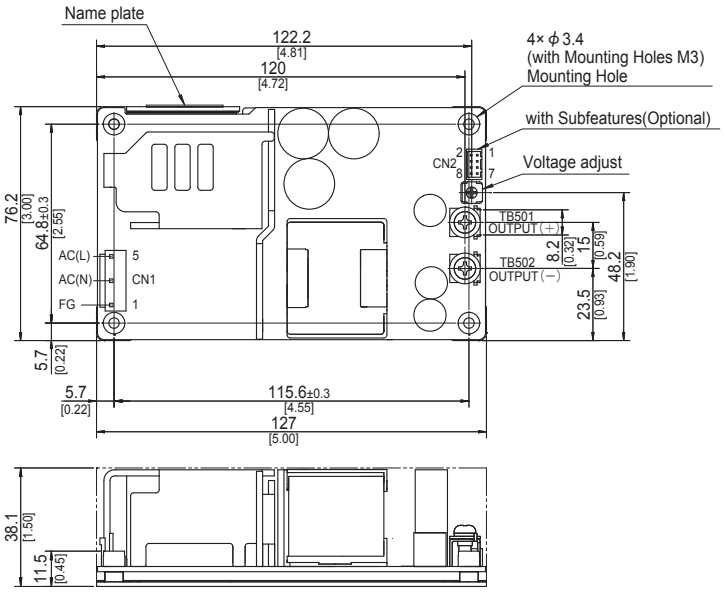

※ Tolerance ±1 [±0.04]
※ Weight : 570g max
※ PCB Material / thickness : FR-4 / 1.7mm [0.07]
※ Chassis Material : Aluminum
※ Dimensions in mm, [ ]=inches
※ Screw tightening torque : (TB501, 502) : M4 1.5N・m max
※ Mounting torque : M3 0.6N・m max
※ Avoid contact between TB501 and 502 wiring with mounting parts.
※ The locations of the output capacitor depend on the model.

Connector		Mating connector	Terminal	Mfr
CN1	B3P5-VH	VHR-5N	SVH-21T-P1.1 SVH-41T-P1.1	J.S.T.
CN2 *	B8B-PHDSS	PHDR-08VS	SPHD-001T-P0.5 SPHD-002T-P0.5	

*Option: R3 or U1

<CN1>

Pin No.	Input
1	FG
2	
3	AC(N)
4	
3	AC(L)

*Pin No.2 and 4 is NC at CN1.

<CN2 (Option: R3)>

Pin No.	Function
1	AUX1 : AUX1 (12V1A) *1
2	AUX1G: AUX1 (GND) *1
3	RC : REMOTE ON/OFF
4	RCG : REMOTE ON/OFF (GND)
5	PG : Power good
6	PGG : Power good (GND)
7	AUX2 : AUX2 (5V1A)
8	AUX2G: AUX2 (GND)

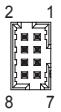

CN2

*Please refer to instruction manual for the pin assignments of the option U1.
*1 In case of GHA700F-12, N.C.

Downloaded from Arrow.com.

COSEL AC-DC Power Supplies Medical Type

GHA300F-SNF

Ordering information

GH A 300 F -□□ -SNF□

① ② ③ ④ ⑤ ⑧

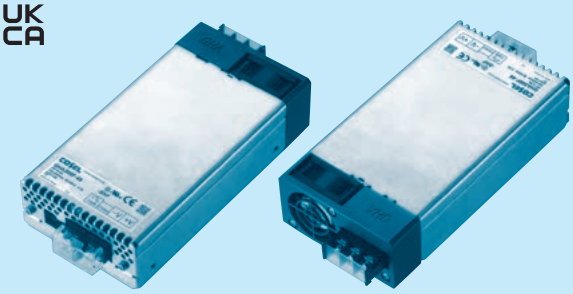

Example recommended EMI/EMC filter
EAC-10-472

High voltage pulse noise type : EAP series
Low leakage current type : EAM series

＊A higher current rating EMI/EMC filter may be recommended in view of the other devices that could be connected in parallel with the power supply.

①Series name
②Single output
③Output wattage
④Universal input
⑤Output voltage
⑥Optional ＊6
J1 : CN501
PHconnector type(J.S.T.)
J2 : CN501
Friction locks connector type (Molex)

Refer to the instruction manual 6.1.

＊Make sure necessary tests will be carried out on your end equipment with the power supply installed in accordance with any required EMC/EMI regulations.

MODEL			GHA300F-12-SNF	GHA300F-24-SNF	GHA300F-48-SNF
MAX OUTPUT WATTAGE[W]			300	300	302.4
DC OUTPUT	Forced air	+50℃	12V 25.0A	24V 12.5A	48V 6.3A

SPECIFICATIONS

	MODEL		GHA300F-12-SNF	GHA300F-24-SNF	GHA300F-48-SNF
INPUT	VOLTAGE[V]		AC90 - 264 1φ (output derating is required at AC90V -115V ＊3)		
	CURRENT[A]	ACIN 120V	3.3typ		
		ACIN 230V	1.8typ		
	FREQUENCY[Hz]		50 / 60 (47 - 63)		
	EFFICIENCY[%]	ACIN 120V	88typ	89typ	89typ
		ACIN 230V	90typ	91typ	91typ
	POWER FACTOR (Io=100%)	ACIN 120V	0.95typ		
		ACIN 230V	0.90typ		
	INRUSH CURRENT[A]	ACIN 120V	20typ (Io=100%) (At cold start) (Ta=25℃)		
		ACIN 230V	40typ (Io=100%) (At cold start) (Ta=25℃)		
	LEAKAGE CURRENT[mA]		0.125/0.250max (ACIN 120V/240V 60Hz,Io=100%, According to IEC60601-1)		
OUTPUT	VOLTAGE[V]		12	24	48
	CURRENT[A]	Forced air	25.0	12.5	6.3
	LINE REGULATION[mV] ＊4		48max	96max	192max
	LOAD REGULATION[mV] ＊4		100max	150max	240max
	RIPPLE[mVp-p] ＊1	0 to +50℃	240max	240max	300max
		-20 - 0℃	320max	320max	400max
	RIPPLE NOISE[mVp-p]＊1	0 to +50℃	300max	300max	480max
		-20 - 0℃	360max	360max	500max
	TEMPERATURE REGULATION[mV]	0 to +50℃	120max	240max	480max
		-20 to +50℃	150max	290max	600max
	DRIFT[mV] ＊2		48max	96max	192max
	START-UP TIME[ms]		500typ (ACIN 120V, Io=100%)		
	HOLD-UP TIME[ms]		16typ (ACIN 120V, Io=100%)		
	OUTPUT VOLTAGE ADJUSTMENT RANGE[V]		10.80 to 13.20	21.60 to 26.40	43.20 to 52.80
	OUTPUT VOLTAGE SETTING[V]		12.00 to 12.48	24.00 to 24.96	48.00 to 49.92
PROTECTION CIRCUIT AND OTHERS	OVERCURRENT PROTECTION		Works over 105% of rating and recovers automatically ＊7		
	OVERVOLTAGE PROTECTION[V]		13.80 to 16.80	27.60 to 33.60	55.20 to 67.20
	AUX1		10V 0.5A		
	AUX2		5V 1A		
	REMOTE ON/OFF		Possible, AUX2 is available		
	PowerGood		Open collector		
ISOLATION	INPUT-OUTPUT · RC · AUX		AC4,000V 1minute, Cutoff current = 10mA, DC500V 50MΩ min (At Room Temperature) 2MOPP		
	INPUT-FG		AC2,000V 1minute, Cutoff current = 10mA, DC500V 50MΩ min (At Room Temperature) 1MOPP		
	OUTPUT · RC · AUX-FG		AC500V 1minute, Cutoff current = 25mA, DC500V 50MΩ min (At Room Temperature)		
	OUTPUT-RC · AUX		AC500V 1minute, Cutoff current = 25mA, DC500V 50MΩ min (At Room Temperature)		
ENVIRONMENT	OPERATING TEMP.,HUMID.AND ALTITUDE		-20 to +70℃, 20 - 90%RH (Non condensing), 3,000m (10,000feet) max ＊3		
	STORAGE TEMP.,HUMID.AND ALTITUDE		-30 to +75℃, 20 - 90%RH (Non condensing), 9,000m (30,000feet) max		
	VIBRATION		10 - 55Hz, 19.6m/s² (2G), 3minutes period, 60minutes each along X, Y and Z axis		
	IMPACT		196.1m/s² (20G), 11ms, once each X, Y and Z axis		
SAFETY AND NOISE REGULATIONS	AGENCY APPROVALS		UL60950-1, ANSI/AAMI ES60601-1, C-UL(CSA60950-1, CAN/CSA60601-1), EN62368-1, EN60601-1 3rd, Complies with DEN-AN, IEC60601-1-2 4th Ed.		
	CONDUCTED NOISE		Complies with FCC-B, VCCI-B, CISPR11-B, CISPR22-B, EN55011-B, EN55022-B		
	HARMONIC ATTENUATOR		Complies with IEC61000-3-2 (class A) ＊5		
OTHERS	CASE SIZE/WEIGHT		85.2×41×165.3mm [3.35×1.61×6.5 inches] (W×H×D) / 620g max		
	COOLING METHOD		Forced air		

＊1 This is the value that measured on measuring board with capacitor of 22μF at 150mm from output terminal.
Measured by 20MHz oscilloscope or Ripple-Noise meter (Equivalent to KEISOKU-GIKEN: RM103).
＊2 Drift is the change in DC output for an eight hour period after a half-hour warm-up at 25℃, with the input voltage held constant at the rated input/output.
＊3 Refer to "Derating".
＊4 Please contact us about dynamic load and input response.
＊5 Please contact us about another class.
＊6 Specification is changed at option, refer to Instruction Manual.
＊7 When output current more than rated, output will shut down after 5 seconds or more.
Recycle input after 3 minutes to reset the protection.
＊ To meet the specifications. Do not operate over-loaded condition.
＊ Sound noise may be generated by power supply in case of pulse load.

Downloaded from Arrow.com.

Features

- Full packaged design united with GHA's features and addtional robastness.
- High efficiency 91% typ (Input voltage 230V,Output voltage 24V)
- Optical for 1U applications
- Medical and Industrial safety approvals
- Low leakage current
- Conformal coating
- Single remote ON/OFF control for DC output, AUX1 and Fan.
- Isolated dual AUX (AUX1 10V 0.5A, AUX2 5V 1A)

Block diagram

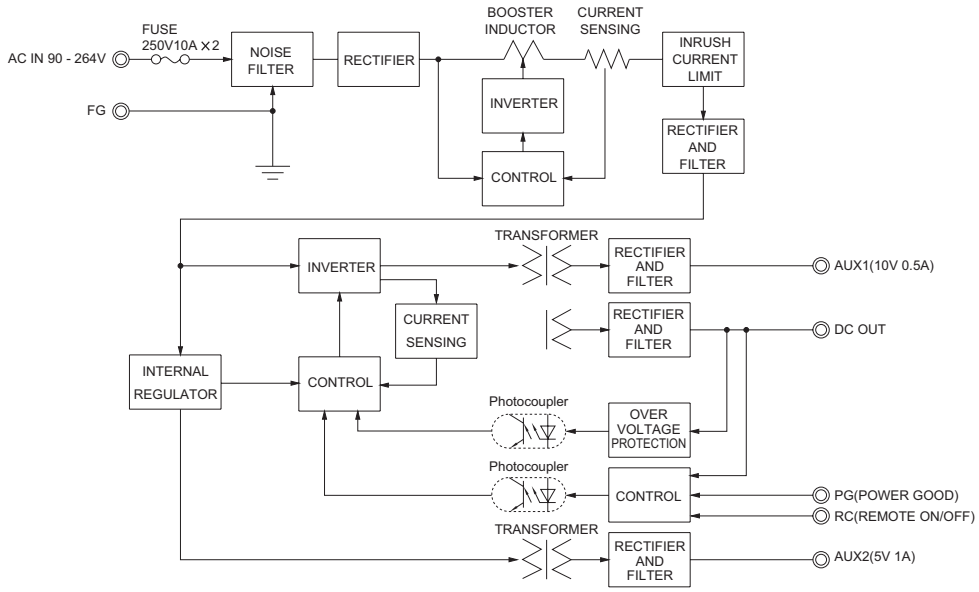

External view

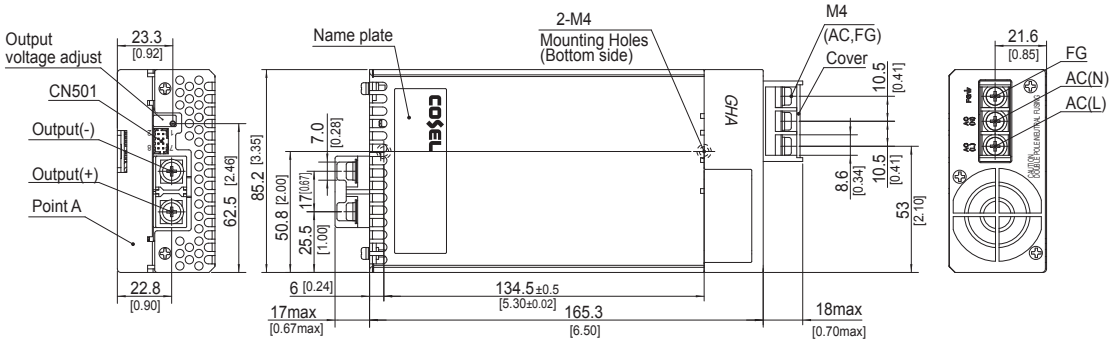

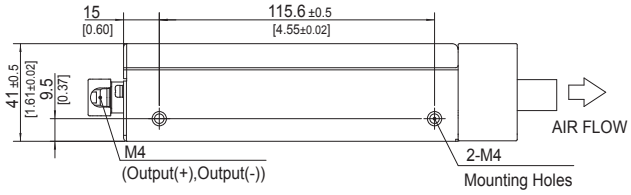

※ Tolerance ±1 [±0.04]
※ Weight : 620g max
※ Upper PCB Material/thickness : FR-4/1.6mm
※ Lower PCB Material/thickness : FR-4/1.6mm
※ Chassis Material/thickness : Aluminum/1.5mm
※ Cover Material/thickness : Aluminum/1.2mm
※ Fan cover Material : PBT
※ Mounting torque : 1.5N · m (14.7kgf · cm) max
※ Screw tightening torque M4 : 1.6N · m (16.9kgf · cm) max
※ Dimensions in mm, [ ]=inches

<CN501 mating connector and terminal>

Connector		Mating connector	Terminal	Mfr
SNF	087833-6320	51110-0851	50394-8051	Molex ＊
SNFJ1	S8B-PHDSS	PHDR-08VS	SPHD-002T-P0.5	J.S.T.
SNFJ2	087833-0831	51110-0860	50394-8051	Molex ＊

＊Please note the pin position No.1 is different from Molex.

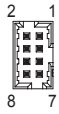

CN501

<CN501>

Pin No.	Function
1	AUX1 : AUX1 (10V0.5A)
2	AUX1G : AUX1 (GND)
3	RC : REMOTE ON/OFF
4	RCG : REMOTE ON/OFF (GND)
5	PG : Power good
6	PGG : Power good (GND)
7	AUX2 : AUX2 (5V1A)
8	AUX2G : AUX2 (GND)

Downloaded from Arrow.com.

COSEL AC-DC Power Supplies Medical Type

GHA500F-SNF

Ordering information

GH A 500 F -□□ -SNF□

① ② ③ ④ ⑤ ⑧

RoHS

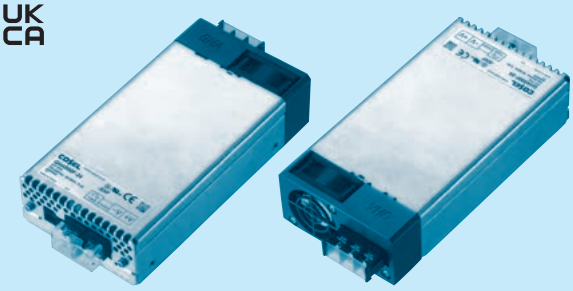

Example recommended EMI/EMC filter
EAC-10-472

High voltage pulse noise type : EAP series
Low leakage current type : EAM series

＊A higher current rating EMI/EMC filter may be recommended in view of the other devices that could be connected in parallel with the power supply.

①Series name
②Single output
③Output wattage
④Universal input
⑤Output voltage
⑧Optional ＊6
J1 : CN501
PHconnector type(J.S.T.)
J2 : CN501
Friction locks connector type (Molex)
P : Parallel Operation

Refer to the instruction manual 6.1.

＊Make sure necessary tests will be carried out on your end equipment with the power supply installed in accordance with any required EMC/EMI regulations.

MODEL			GHA500F-12-SNF	GHA500F-15-SNF	GHA500F-24-SNF	GHA500F-30-SNF	GHA500F-48-SNF	GHA500F-56-SNF
MAX OUTPUT WATTAGE[W]			450	501	504	501	504	504
DC OUTPUT	Forced air	+50℃	12V 37.5A	15V 33.4A	24V 21.0A	30V 16.7A	48V 10.5A	56V 9.0A

SPECIFICATIONS

	MODEL		GHA500F-12-SNF	GHA500F-15-SNF	GHA500F-24-SNF	GHA500F-30-SNF	GHA500F-48-SNF	GHA500F-56-SNF
INPUT	VOLTAGE[V]		AC90 - 264 1φ (output derating is required at AC90V -115V ＊3)					
	CURRENT[A]	ACIN 120V	4.8typ	5.4typ				
		ACIN 230V	2.6typ	2.9typ				
	FREQUENCY[Hz]		50 / 60 (47 - 63)					
	EFFICIENCY[%]	ACIN 120V	87typ	89typ	89typ	89typ	89typ	89typ
		ACIN 230V	89typ	91typ	91typ	91typ	91typ	91typ
	POWER FACTOR (Io=100%)	ACIN 120V	0.95typ					
		ACIN 230V	0.90typ					
	INRUSH CURRENT[A]	ACIN 120V	20typ (Io=100%) (At cold start) (Ta=25℃)					
		ACIN 230V	40typ (Io=100%) (At cold start) (Ta=25℃)					
	LEAKAGE CURRENT[mA]		0.125/0.250max (ACIN 120V/240V 60Hz,Io=100%, According to IEC60601-1)					
OUTPUT	VOLTAGE[V]		12	15	24	30	48	56
	CURRENT[A]	Forced air	37.5	33.4	21.0	16.7	10.5	9.0
	LINE REGULATION[mV] ＊4		48max	60max	96max	120max	192max	192max
	LOAD REGULATION[mV] ＊4		100max	120max	150max	180max	240max	240max
	RIPPLE[mVp-p] ＊1	0 to +50℃	240max	240max	240max	300max	300max	400max
		-20 - 0℃	320max	320max	320max	400max	400max	500max
	RIPPLE NOISE[mVp-p]＊1	0 to +50℃	300max	300max	300max	480max	480max	500max
		-20 - 0℃	360max	360max	360max	500max	500max	580max
	TEMPERATURE REGULATION[mV]	0 to +50℃	120max	150max	240max	300max	480max	480max
		-20 to +50℃	150max	180max	290max	360max	600max	600max
	DRIFT[mV]	＊2	48max	60max	96max	120max	192max	192max
	START-UP TIME[ms]		500typ (ACIN 120V, Io=100%)					
	HOLD-UP TIME[ms]		16typ (ACIN 120V, Io=100%)					
	OUTPUT VOLTAGE ADJUSTMENT RANGE[V]		10.80 to 13.20	13.50 to 16.50	21.60 to 26.40	27.00 to 31.50	43.20 to 52.80	52.00 to 56.00
	OUTPUT VOLTAGE SETTING[V]		12.00 to 12.48	15.00 to 15.30	24.00 to 24.96	30.00 to 31.20	48.00 to 49.92	55.00 to 56.00
PROTECTION CIRCUIT AND OTHERS	OVERCURRENT PROTECTION		Works over 105% of rating and recovers automatically ＊7					
	OVERVOLTAGE PROTECTION[V]		13.80 to 16.80	17.25 to 21.00	27.60 to 33.60	34.50 to 42.00	55.20 to 67.20	60.00 to 69.00
	AUX1		12V 0.5A					
	AUX2		5V 1A					
	REMOTE ON/OFF		Possible, AUX2 is available					
	PowerGood		Open collector					
ISOLATION	INPUT-OUTPUT · RC · AUX		AC4,000V 1minute, Cutoff current = 10mA, DC500V 50MΩ min (At Room Temperature) 2MOPP					
	INPUT-FG		AC2,000V 1minute, Cutoff current = 10mA, DC500V 50MΩ min (At Room Temperature) 1MOPP					
	OUTPUT · RC · AUX-FG		AC500V 1minute, Cutoff current = 25mA, DC500V 50MΩ min (At Room Temperature)					
	OUTPUT-RC · AUX		AC500V 1minute, Cutoff current = 25mA, DC500V 50MΩ min (At Room Temperature)					
ENVIRONMENT	OPERATING TEMP.,HUMID.AND ALTITUDE		-20 to +70℃, 20 - 90%RH (Non condensing), 3,000m (10,000feet) max ＊3					
	STORAGE TEMP.,HUMID.AND ALTITUDE		-30 to +80℃, 20 - 90%RH (Non condensing), 9,000m (30,000feet) max					
	VIBRATION		10 - 55Hz, 19.6m/s² (2G), 3minutes period, 60minutes each along X, Y and Z axis					
	IMPACT		196.1m/s² (20G), 11ms, once each X, Y and Z axis					
SAFETY AND NOISE REGULATIONS	AGENCY APPROVALS		UL60950-1, ANSI/AAMI ES60601-1, C-UL(CSA60950-1, CAN/CSA60601-1), EN62368-1, EN60601-1 3rd, Complies with DEN-AN, IEC60601-1-2 4th Ed.					
	CONDUCTED NOISE		Complies with FCC-B, VCCI-B, CISPR11-B, CISPR22-B, EN55011-B, EN55022-B					
	HARMONIC ATTENUATOR		Complies with IEC61000-3-2 (class A) ＊5					
OTHERS	CASE SIZE/WEIGHT		85.2×41×165.3mm [3.35×1.61×6.5 inches] (W×H×D) / 660g max					
	COOLING METHOD		Forced air					

＊1 This is the value that measured on measuring board with capacitor of 22μF at 150mm from output terminal.
Measured by 20MHz oscilloscope or Ripple-Noise meter (Equivalent to KEISOKU-GIKEN: RM103).
＊2 Drift is the change in DC output for an eight hour period after a half-hour warm-up at 25℃, with the input voltage held constant at the rated input/output.
＊3 Refer to "Derating".
＊4 Please contact us about dynamic load and input response.
＊5 Please contact us about another class.
＊6 Specification is changed at option, refer to Instruction Manual.
＊7 When output current more than rated, output will shut down after 5 seconds or more.
Recycle input after 3 minutes to reset the protection.
＊ To meet the specifications. Do not operate over-loaded condition.
＊ Sound noise may be generated by power supply in case of pulse load.
＊ Parallel operation is available with -P option. Refer to 5.1on the instruction manual.

Downloaded from Arrow.com.

Features

- Full packaged design united with GHA's features, and additional robustness..
- High efficiency 91% typ (Input voltage 230V,Output voltage 24V)
- 50% minimized size compares with previous products.
- Optical for 1U applications
- Medical and Industrial safety approvals
- Low leakage current
- Conformal coating
- Single remote ON/OFF control for DC output, AUX1 and Fan.
- Isolated dual AUX (AUX1 12V 0.5A, AUX2 5V 1A)

Block diagram

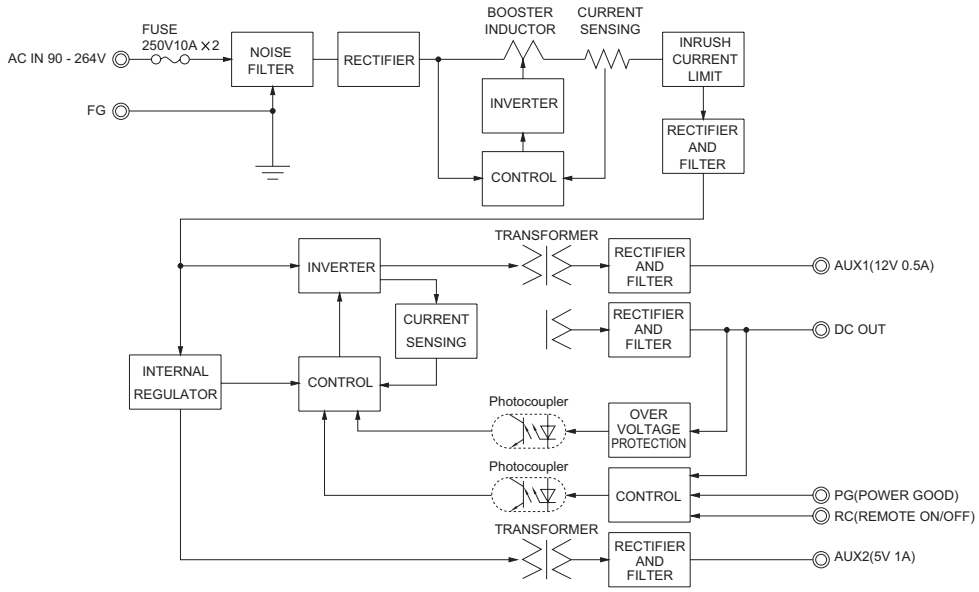

External view

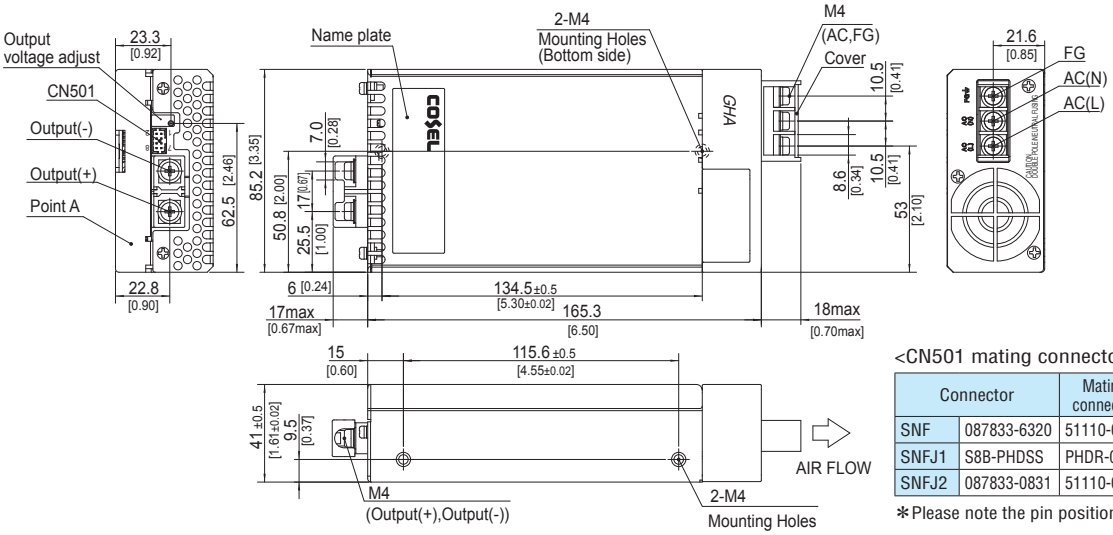

※ Tolerance ±1 [±0.04]
※ Weight : 660g max
※ Upper PCB Material/thickness : FR-4/1.6mm
※ Lower PCB Material/thickness : AL/1.5mm
※ Chassis Material/thickness : Aluminum/1.5mm
※ Cover Material/thickness : Aluminum/1.2mm
※ Fan cover Material : PBT
※ Mounting torque : 1.5N · m (14.7kgf · cm) max
※ Screw tightening torque M4 : 1.6N · m (16.9kgf · cm) max
※ Dimensions in mm, [ ]=inches

<CN501 mating connector and terminal>

Connector		Mating connector	Terminal	Mfr
SNF	087833-6320	51110-0851	50394-8051	Molex ＊
SNFJ1	S8B-PHDSS	PHDR-08VS	SPHD-002T-P0.5	J.S.T.
SNFJ2	087833-0831	51110-0860	50394-8051	Molex ＊

＊Please note the pin position No.1 is different from Molex.

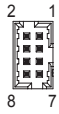

CN501

<CN501>

Pin No.	Function
1	AUX1 : AUX1 (12V0.5A)
2	AUX1G : AUX1 (GND)
3	RC : REMOTE ON/OFF
4	RCG : REMOTE ON/OFF (GND)
5	PG : Power good
6	PGG : Power good (GND)
7	AUX2 : AUX2 (5V1A)
8	AUX2G : AUX2 (GND)

Downloaded from Arrow.com.

Assembling and Installation Method

● GHA300/500F

■Mounting method

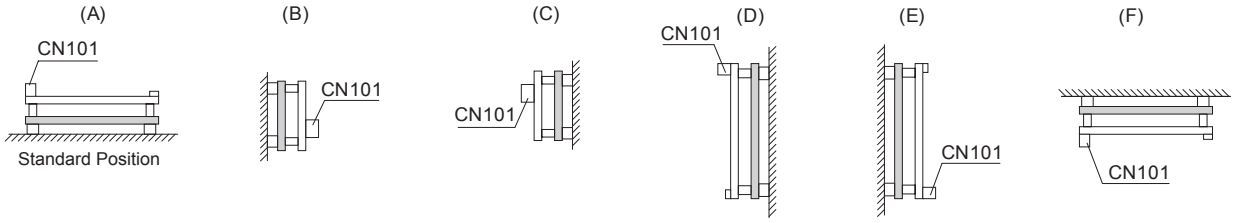

● GHA700F

■Mounting method

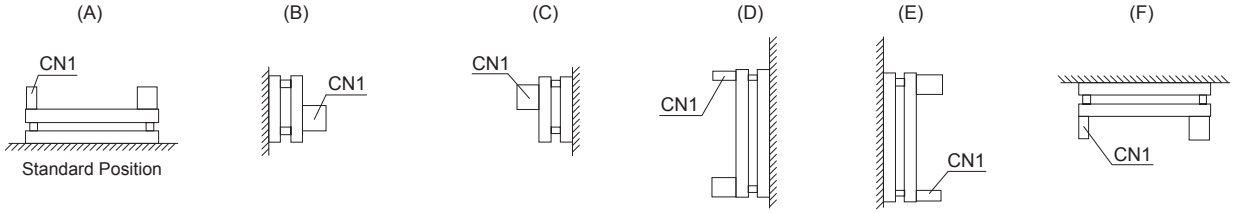

■AC voltage exist on the primary side therefore. In order to prevent electric shock, or to meet the leakage current requirements of the safety standard, you need to ensure the proper insolation distance.

■During use, keep the distance between d1 & d2 for to insulate between lead of component and metal chassis, use the spacer of 5mm or more between d2. If it is less than d1 & d2, insert the insulation sheet between power supply and metal chassis.

■Conduction cooling, forced air and convection cooling are available (GHA500/700F).
When using conduction cooling, unless the baseplate and the heat sink are placed in close contact with each other, contact thermal resistance will increase until heat dissipation becomes insufficient.
Always use eithe thermal greaser or a thermal sheet.
If processing thermal grease, apply it thinly and evenly.
Also, when processing the thermal sheet, make a hole according to the position of the screw.
If the four corners are cut as shown in the figure below, stress may be applied to the edges of the base plate during fixing, which may damage the built-in parts, so avoid such processing.

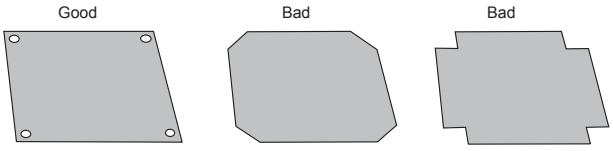

Image of using thermal sheet and precautions when processing

● GHA300F

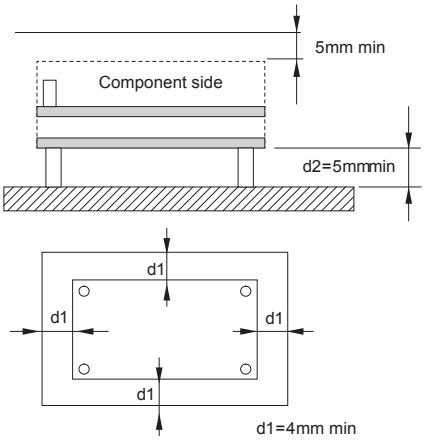

● GHA500F

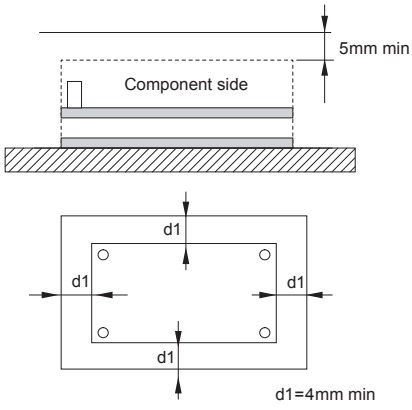

Downloaded from Arrow.com.

Assembling and Installation Method

● GHA700F

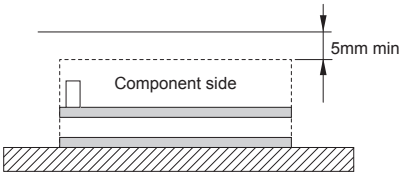

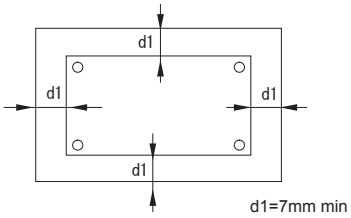

Remarks:

There is a possibility that it is not possible to cool enough when the power supply is used by the sealing up space as showing in right figure.

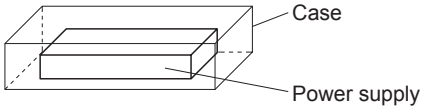

● GHA300/500F-SNF

■Mounting screw

Screw length into power supply should be shorter than 6mm due to keep safety isolation clearance from inside components in right figure. Please fix power supply surely by screws in consideration of the weight.

■A cooling FAN is built-in. Please keep 30mm or more clearance both input and output side to make enough air ventilation. Do not block off cooling FAN's air flow for stable operation.

■When power supply is used where dust exist, it may cause of FAN failure. It is recommended to install a air filter to the system air ventilation duct.

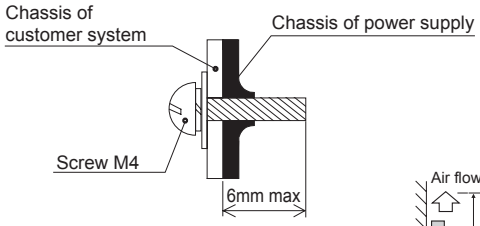

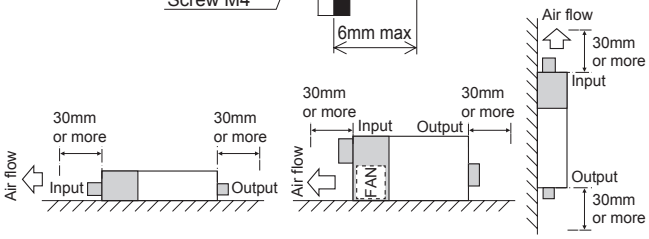

(A) (B) (C)

Mounting screw

■The mounting screw should be M3. The hatched area shows the allowance of metal parts for mounting.

■If metallic fittings are used on the component side of the board, ensure there is no contact with surface mounted components.

■This product uses SMD technology. Please avoid the PCB installation method which includes the twisting stress or the bending stress.

● GHA300/500F

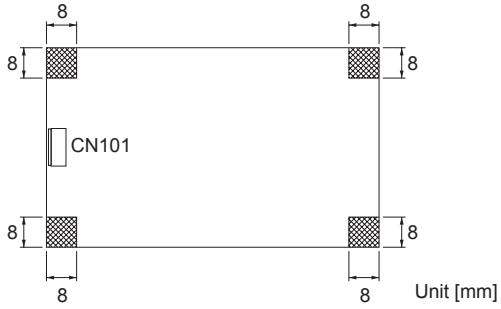

● GHA700F

∗The center of ϕ7mm is the same point as the center of the mounting hole.

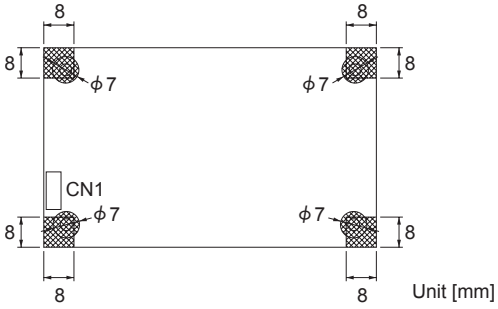

Downloaded from Arrow.com.

Derating

■Cooling method

Conduction cooling, forced air and convection cooling are available for GHA500F and GHA700F. Both Forced air and convection cooling are available for GHA300F. Please see instruction manual 3 for details. Please make sure the maximum component temperature rise given in instruction manual 3 is not exceeded.

● GHA300/500F

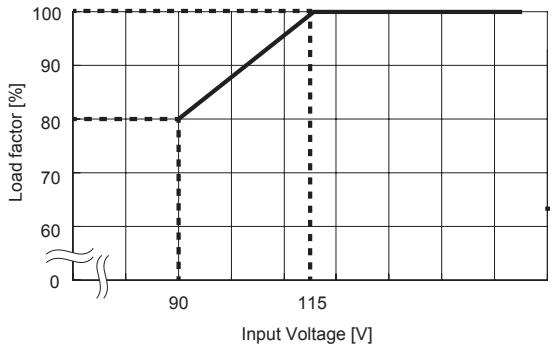

∗For maximum power in each cooling method, please apply.

● GHA700F

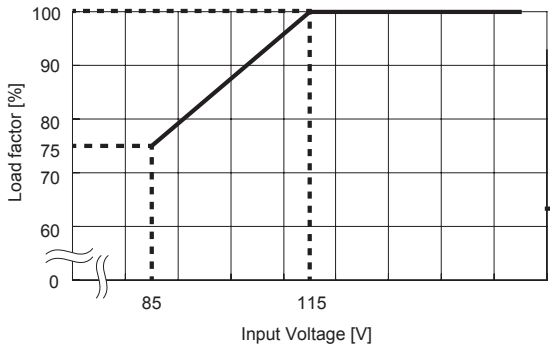

∗For maximum power in each cooling method, please apply.

● GHA500F Ambient temperature derating curve at forced air (Reference value)

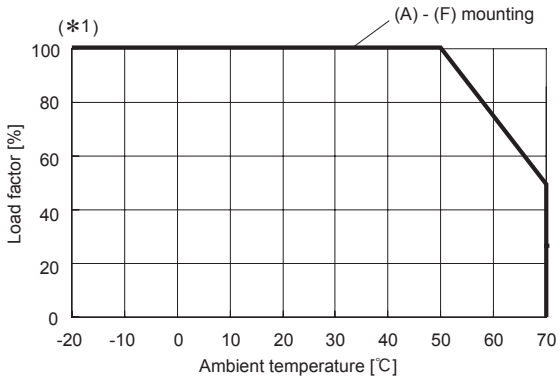

∗For the derating curves of other heat dissipation methods, see instruction manual 3.

∗1 The maximum output power by wind speed conditions (Reference value)

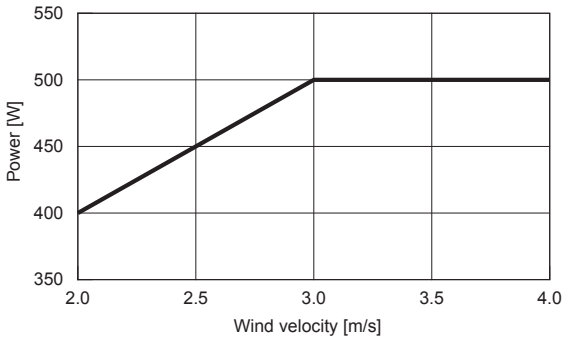

● GHA300F Ambient temperature derating curve at forced air (Reference value)

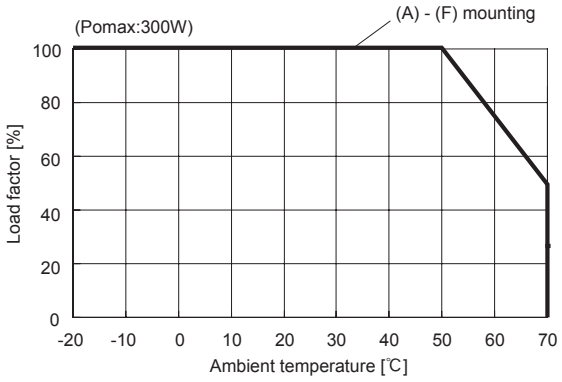

∗For the derating curves of other heat dissipation methods, see instruction manual 3.

● GHA300/500F-SNF Ambient temperature derating curve (Reference value)

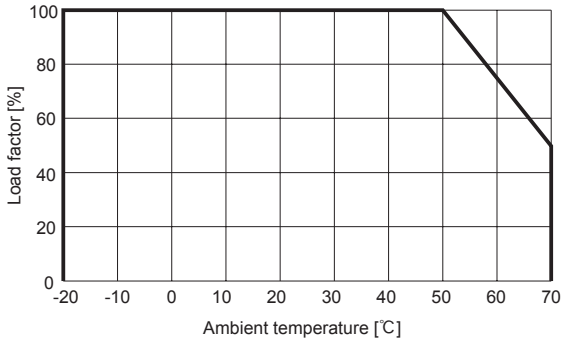

Downloaded from Arrow.com.

Derating

● GHA700F Ambient temperature derating curve at forced air (Reference value)

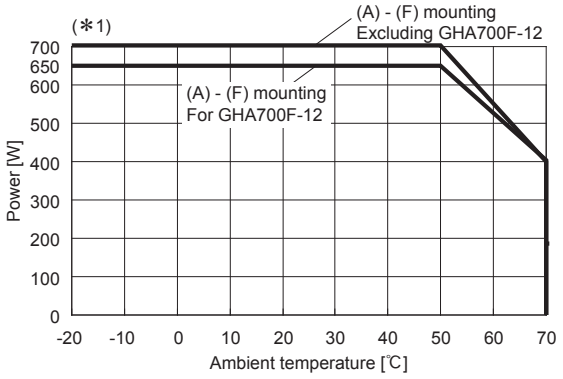

＊For the derating curves of other heat dissipation methods, see instruction manual 3.

＊1 The maximum output power by wind speed conditions (Reference value)

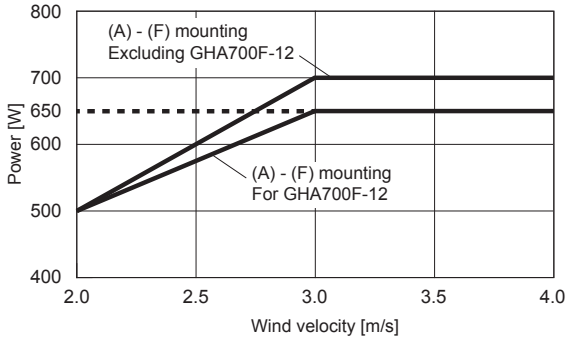

Instruction Manual

◆ It is necessary to read the “Instruction Manual” and “Before using our product” before you use our product.

Basic Characteristics Data

Model	Circuit method	Switching frequency [kHz]	Input current ＊1 [A]	Inrush current protection	PCB/Pattern			Series/Parallel operation availability	
					Material	Single sided	Double sided	Series operation	Parallel operation
GHA300F	boost chopper	60 - 220	3.3	Thermistor	FR-4	—	Yes	Yes	No
	LLC resonant converters	90 - 180							
GHA500F	boost chopper	60 - 220	5.4	Thermistor	Aluminum/FR-4	Yes	Yes	Yes	＊2
	LLC resonant converters	90 - 180							
GHA700F	boost chopper	55 - 75	6.3	Thermistor	FR-4	—	Yes	Yes	No
	LLC resonant converters	45 - 370							
GHA300F-SNF	boost chopper	60 - 220	3.3	Thermistor	FR-4	Yes	Yes	Yes	No
	LLC resonant converters	90 - 180							
GHA500F-SNF	boost chopper	60 - 220	5.4	Thermistor	Aluminum/FR-4	Yes	Yes	Yes	＊2
	LLC resonant converters	90 - 180							

＊1 The value of input current is at ACIN 120V and rated load.
＊2 Parallel operation is available with –P option. Refer to 6.1on the instruction manual.

Downloaded from Arrow.com.