MICRO SWITCH
a Honeywell Division
FED. MFG. CODE 91929

SWITCH - ENCLOSED

CATALOG LISTING
ML-1329

NOTES

1 - HARD ANODIZED ALUMINUM HOUSING, STAINLESS STEEL PLUNGER
2 - SWITCH SEALED WATERTIGHT, TESTED TO +5 PSIG
3 - THERMOPLASTIC MATERIAL(S) SHALL CONFORM TO MIL-M-14 OR MIL-M-24519
4 - FLUOROSILICONE SEAL USED FOR PLUNGER SEAL
5 - TEMPERATURE RANGE -65° TO +185°F
6 CIRCUIT DIAGRAM, CATALOG LISTING, AND DATE CODE MARKED ON SWITCH
7 PLUNGER FREE POSITION ADJUSTABLE RANGE
8 - SHOCK: 50g
9 - VIBRATION: 10 - 2000 Hz
10 - MECHANICAL LIFE: 50,000 CYCLES
11 CAPTIVE MOUNTING SCREWS, SPECIAL HEAD 6-32 UNC-3A 0.30 GRIP LENGTH
12 CAPTIVE MOUNTING SCREWS, SPECIAL HEAD 6-32 UNC-3A 0.20 GRIP LENGTH
13 - TERMINAL BLOCK CAN BE MOLDED OR MACHINED WITH TERMINAL BLOCK. COLOR OPTIONAL
14 POTTING TO COVER THIS AREA AND MAY EXTEND HIGHER THAN SURFACE OF HOUSING FLANGE

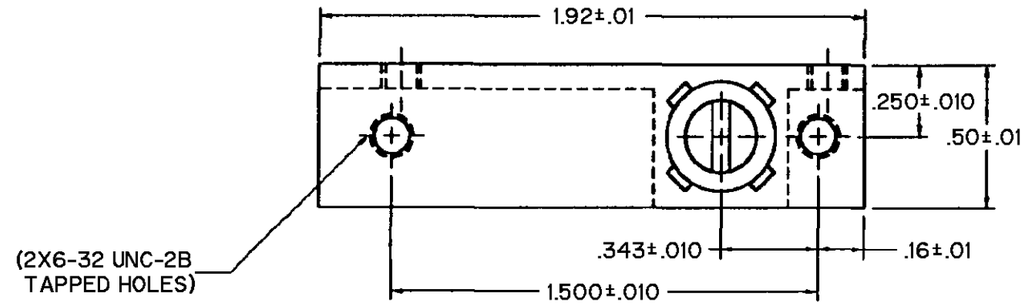

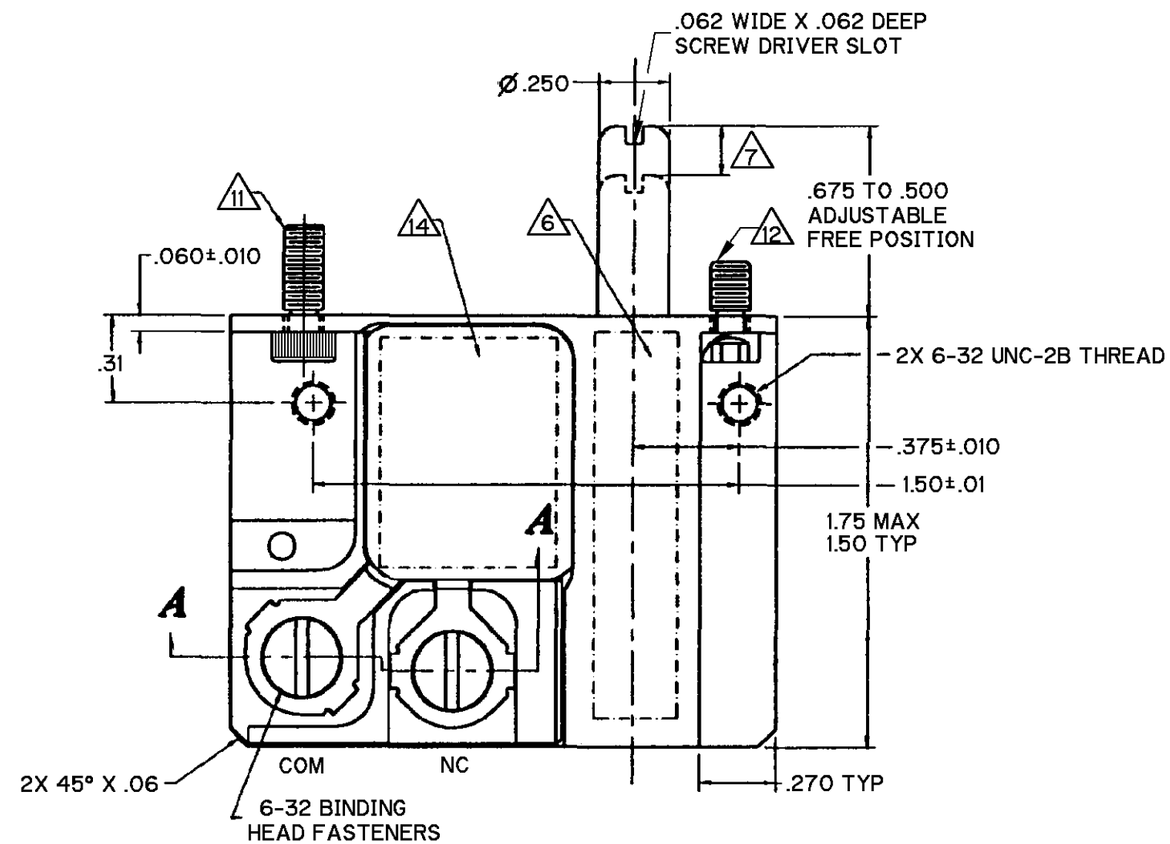

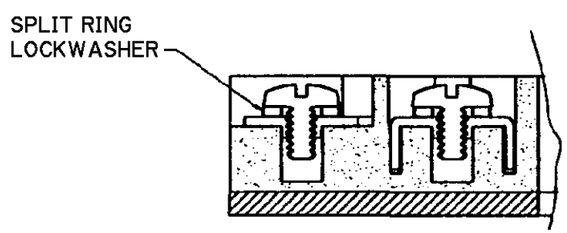

SECTION A-A

CIRCUIT DIAGRAM

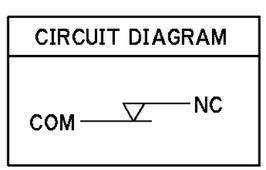

THIS DRAWING COVERS A PROPRIETARY ITEM AND IS THE PROPERTY OF MICRO SWITCH. A DIVISION OF HONEYWELL. THIS DRAWING IS NOT TO BE COPIED OR USED WITHOUT THE APPROVAL OF MICRO SWITCH

THIRD ANGLE PROJECTION

SCALE NONE

DO NOT SCALE PRINT

UNLESS OTHERWISE SPECIFIED TOLERANCES ARE

ONE PLACE	(.0)	±.030
TWO PLACE	(.00)	±.015
THREE PLACE	(.000)	±.005
ANGLES		±4°

WEIGHT

ANSI Y14.5M-1982 APPLIES

CHARACTERISTICS	
OPERATING FORCE	7±3 LBS
FULL OVERTRAVEL FORCE	30 LBS MAX
RELEASE FORCE	2 LBS MIN
PRETRAVEL	.12 MAX
DIFFERENTIAL TRAVEL	.020±.010
OVERTRAVEL	.35 MIN
FREE POSITION	

ELECTRICAL DATA

CONTACT ARRANGEMENT
SPNC(1)

CONTACT MATERIALS: GOLD, OVERLAY AND ALLOY

	30 VDC	
LOAD	SEA LEVEL	50,000 FT
RES	1.0	1.0
IND	0.25	0.5
MAX INRUSH	2.0	2.0

CATALOG LISTING ML-1329
PAGE 1 OF 1
RELEASE NO. PR-24168
REPLACES
ISSUE 2
M

REVISIONS
A 0020711 SK 05APR06

DRAWN	J L H	25 SEP 99	CHECK	SAV	25 SEP 99	CHECK	AS	05APR06	CHECK		

ORMTEK

Downloaded from Arrow.com.