Alle Rechte vorbehalten/ *All rights reserved*

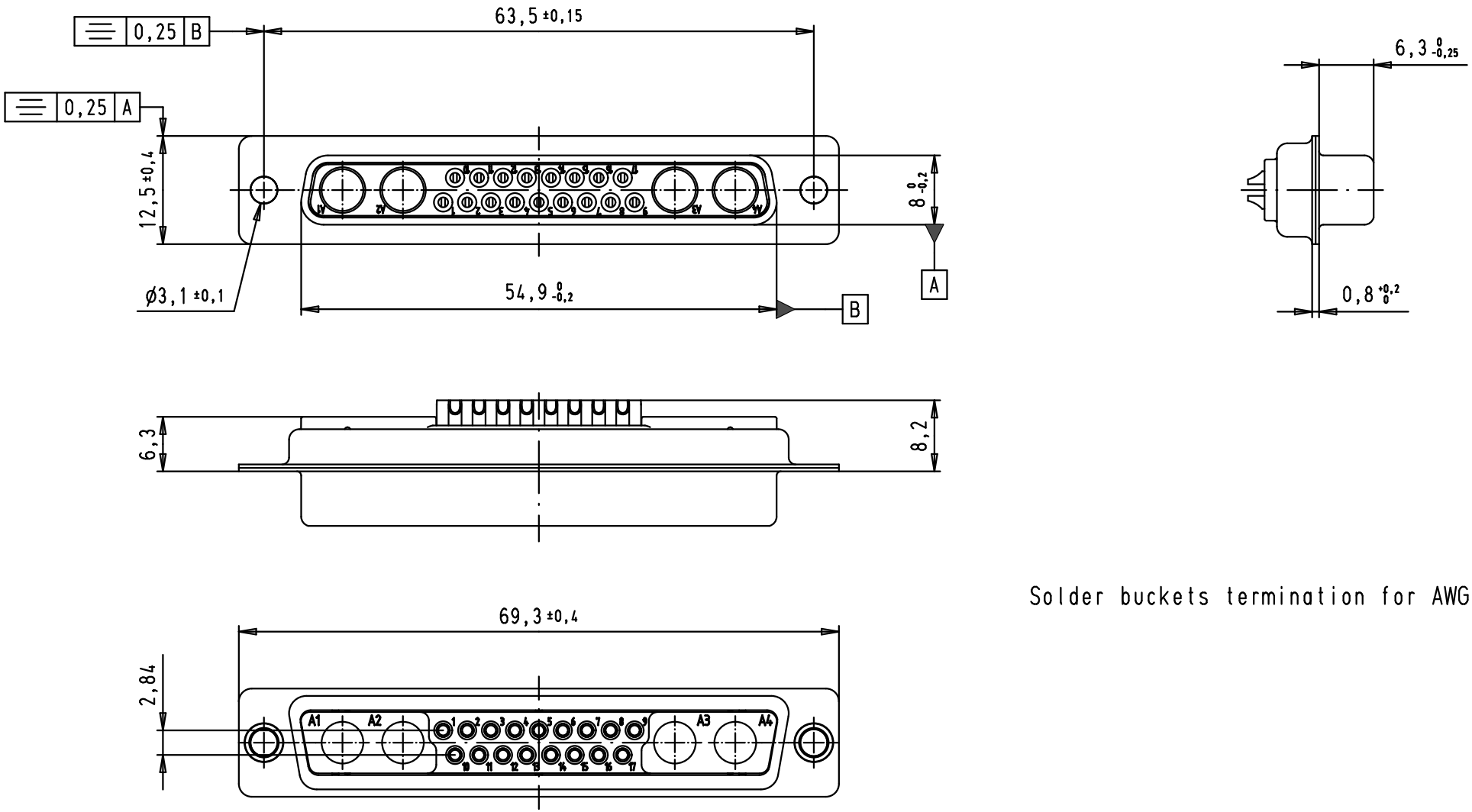

Solder buckets termination for AWG 20

09 69 401 7214	PL3
09 69 401 5214	S4
Part number	Performance level

Mod.	Dat.	Name
34887	04/03/08	PK
29742	13/11/01	AF

	Dat.	Name
Detail.	04/03/08	PK
Insp.		
Stand.		

All Dim. in mm
Orig. Size DIN A 4

HARTING EURL
F-95972 Paris

D-Sub, 21WA4, female, straight, solder buckets, tin plated shell

Maßstab/ *Scale* 1,5:1

TB 09 69 401 X214

Sub.

Blatt/ *Page* 1/1

Downloaded from Arrow.com.