Data Sheet | Item Number: 769-604/002-000

1-conductor male connector; CAGE CLAMP®; 4 mm²; Pin spacing 5 mm; 4-pole; clamping collar; 4,00 mm²; gray

https://www.wago.com/769-604/002-000

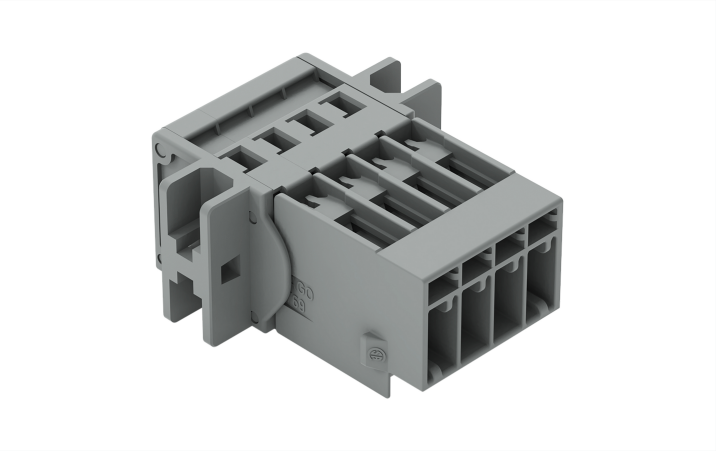

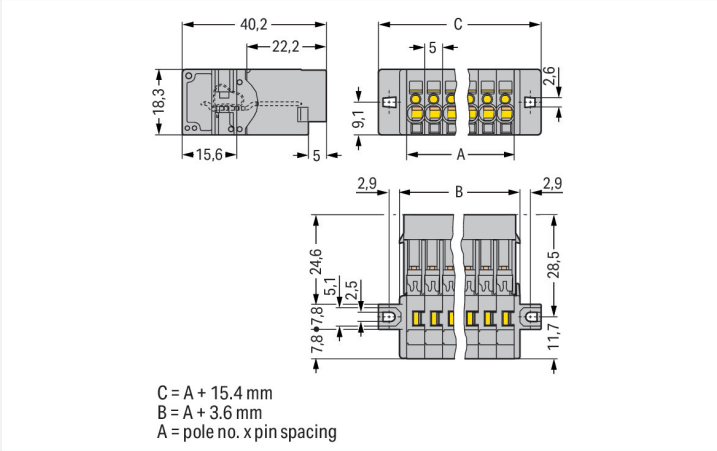

Color: gray

Dimensions in mm

Male connector, 769 Series, CAGE CLAMP®

Our male connector (item number 769-604/002-000) is designed for seamless electrical installations. Strip lengths must be between 8 and 9 mm when connecting conductors to this male connector. Pluggable rail-mount terminal blocks are primarily found in switchgear units and control systems, most notably in railroad technology. These innovative systems combine the properties of rail-mount terminal blocks and connectors for a flexible and reliable wiring system. You also have the option of pre-assembling installations, which not only makes production but also installation, operation, and maintenance more efficient and cost-effective. This product features conductor terminals and utilizes CAGE CLAMP®. Our tried-and-tested universal connection known as CAGE CLAMP® is industry-leading when it comes to connection technology and electrical interconnections. Depending on the type of conductor, this male connector is ideal for conductor cross sections ranging from 0.08 mm² to 4 mm².

This male connector/plug is operated with an operating tool.

Electrical data

Ratings per IEC/EN

Nominal voltage (III/3)	500 V
Rated impulse withstand voltage (III / 3)	6 kV
Rated current	32 A
Legend (ratings)	(III / 3) ≙ Overvoltage category III / Pollution degree 3

General information

Wiring direction	Front-entry wiring

Connection Data

Clamping units	4
Total number of potentials	4

Connection 1

Connection technology	CAGE CLAMP®
Actuation type	Operating tool
Connectable conductor materials	Copper
Nominal cross-section	4 mm² / 12 AWG
Solid conductor	0.08 … 4 mm² / 28 … 12 AWG
Fine-stranded conductor	0.08 … 4 mm² / 28 … 12 AWG
Strip length	8 … 9 mm / 0.31 … 0.35 inches
Pole number	4

Downloaded from Arrow.com.

Connection 1	
Wiring direction	Front-entry wiring

Physical data	
Pin spacing	5 mm / 0.197 inches
Width	35.4 mm / 1.394 inches
Height from the surface	18.3 mm / 0.72 inches
Depth	40.2 mm / 1.583 inches

Mechanical data	
Variable coding	Yes
Direct ground contact to DIN-rail/drilled hole/housing	No
Mounting type	Mounting flange
Anti-rotation protection	Yes
Suitable for through-panel applications	Yes

Plug-in connection	
Contact type (pluggable connector)	Male connector/plug
Connector (connection type)	for conductor
Mismating protection	No

Material data	
Note (material data)	Information on material specifications can be found here
Color	gray
Material group	I
Insulation material (main housing)	Polyamide (PA66)
Flammability class per UL94	V0
Fire load	0.257 MJ
Weight	13.5 g

Environmental requirements	
Processing temperature	-35 … +85 °C
Continuous operating temperature	-60 … +105 °C

Commercial data	
Product Group	18 (X-COM-System)
PU (SPU)	50 pcs
Packaging type	Box
Country of origin	PL
GTIN	4044918520911
Customs tariff number	85366930000

Downloaded from Arrow.com.

Product Classification

UNSPSC	39121409
eCl@ss 10.0	27-14-11-06
eCl@ss 9.0	27-14-11-06
ETIM 9.0	EC001284
ETIM 10.0	EC001284
ECCN	NO US CLASSIFICATION

Environmental Product Compliance

RoHS Compliance Status	Compliant,No Exemption

Approvals / Certificates

General approvals

Approval	Standard	Certificate Name
CCA DEKRA Certification B.V.	EN 60947	NTR NL-7626
CCA DEKRA Certification B.V.	EN 61984	2190419.02
CCA DEKRA Certification B.V.	IEC 61984	NL-47799/A1
CSA CSA Group	C22.2	1101144
KEMA/KEUR DEKRA Certification B.V.	EN 60947	2190419.01
UL Underwriters Laboratories Inc.	UL 1059	E45172
UL Underwriters Laboratories Inc.	UL 1977	20151210-E45171

Approvals for marine applications

Approval	Standard	Certificate Name
DNV GL Det Norske Veritas, Germanischer Lloyd	-	TAE00001V2
PRS Polski Rejestr Statków	-	TE/1094/880590/23

Declarations of conformity and manufacturer's declarations

Approval	Standard	Certificate Name
EU-Declaration of Conformity WAGO GmbH & Co. KG	-	-
Railway WAGO GmbH & Co. KG	-	Z00004428.000

Downloaded from Arrow.com.

Downloads

Environmental Product Compliance

Compliance Search

Environmental Product Compliance
769-604/002-000

Documentation

Bid Text

769-604/002-000	19.02.2019	xml 3.24 KB	
769-604/002-000	04.10.2017	doc 25.00 KB	

CAD/CAE-Data

CAD data

2D/3D Models
769-604/002-000

CAE data

EPLAN Data Portal
769-604/002-000

WSCAD Universe
769-604/002-000

ZUKEN Portal
769-604/002-000

1 Compatible Products

1.1 System counterpart

1.1.1 Female connector/socket

Item No.: 769-104
1-conductor female connector; CAGE CLAMP®; 4 mm²; Pin spacing 5 mm; 4-pole; coding finger; 4,00 mm²; gray

Item No.: 769-104/021-000
1-conductor female connector; CAGE CLAMP®; 4 mm²; Pin spacing 5 mm; 4-pole; coding finger; Lateral locking levers; 4,00 mm²; gray

Item No.: 769-124
2-conductor female connector; CAGE CLAMP®; 4 mm²; Pin spacing 5 mm; 4-pole; coding finger; 4,00 mm²; gray

1.2 Required Accessories

1.2.1 Installation

1.2.1.1 Mounting accessories

Item No.: 769-499
Fixing screw M2.5 x 16; and hexagon nut M2.5

Downloaded from Arrow.com.

1.3 Optional Accessories

1.3.1 Coding

1.3.1.1 Coding

Item No.: 769-435
Coding pin; for coding of female plugs; for carrier terminal blocks / male connectors; orange

1.3.2 Ferrule

1.3.2.1 Ferrule

Item No.: 216-201
Ferrule; Sleeve for 0.5 mm² / 20 AWG; insulated; electro-tin plated; electrolytic copper; acc. to DIN 46228, Part 4/09.90; white

Item No.: 216-101
Ferrule; Sleeve for 0.5 mm² / AWG 22; uninsulated; electro-tin plated; silver-colored

Item No.: 216-202
Ferrule; Sleeve for 0.75 mm² / 18 AWG; insulated; electro-tin plated; gray

Item No.: 216-102
Ferrule; Sleeve for 0.75 mm² / 18 AWG; uninsulated; electro-tin plated; silver-colored

Item No.: 216-203
Ferrule; Sleeve for 1 mm² / AWG 18; insulated; electro-tin plated; red

Item No.: 216-103
Ferrule; Sleeve for 1 mm² / AWG 18; uninsulated; electro-tin plated

Item No.: 216-204
Ferrule; Sleeve for 1.5 mm² / AWG 16; insulated; electro-tin plated; black

Item No.: 216-104
Ferrule; Sleeve for 1.5 mm² / AWG 16; uninsulated; electro-tin plated; silver-colored

Item No.: 216-206
Ferrule; Sleeve for 2.5 mm² / AWG 14; insulated; electro-tin plated; blue

1.3.3 Insulation stop

1.3.3.1 Insulation stop

Item No.: 769-470
Insulation stop; 0.08 - 0.2 mm² "s" (0.14 mm² "f-st"); 5 pieces/strip; white

Item No.: 769-471
Insulation stop; 0.25 - 0.5 mm²; 5 pieces/strip; light gray

Item No.: 769-472
Insulation stop; 0.75 - 1 mm²; 5 pieces/strip; dark gray

1.3.4 Marking

1.3.4.1 Marker

Item No.: 248-501
Mini-WSB marking card; as card; not stretchable; plain; snap-on type; white

Downloaded from Arrow.com.

1.3.4.2 Marking strip

Item No.: 210-833
Marking strips; 25 m on roll; 6 mm wide; plain; Self-adhesive; white

Item No.: 210-831
Marking strips; on reel; 2.3 mm wide; plain; Self-adhesive; white

Item No.: 210-832
Marking strips; on reel; 3 mm wide; plain; Self-adhesive; white

Item No.: 210-834
Marking strips; on reel; 5 mm wide; plain; Self-adhesive; white

1.3.5 Protective warning marker

1.3.5.1 Cover

Item No.: 280-415
Protective warning marker; for 5 terminal blocks; with high-voltage symbol, black; yellow

1.3.6 Strain relief

1.3.6.1 Strain relief

Item No.: 769-412
Strain relief plate; for female and male connectors; 1 part; Pin spacing 5 mm; 4- to 5-pole; gray

1.3.7 Tool

1.3.7.1 Operating tool

Item No.: 210-490
Operating tool

Item No.: 769-434
Operating tool; made of insulating material; 1-way; loose; white

Installation Notes

Installation

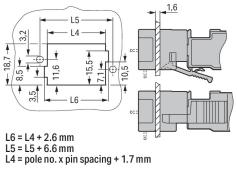

Cutout
Headers with solder pins and mounting flanges

Downloaded from Arrow.com.

Conductor termination

Operating tool
Inserting a conductor via operating tool (example shows a male connector).

Application

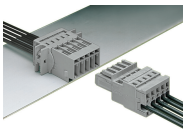

Male connector with CAGE CLAMP® and mounting flanges
1-connector female plug, straight

Marking

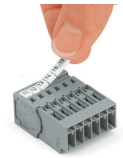

Labeling a male connector with CAGE CLAMP® connection via Mini-WSB Quick Markers.

Downloaded from Arrow.com.