Alle Rechte vorbehalten/ *All rights reserved*

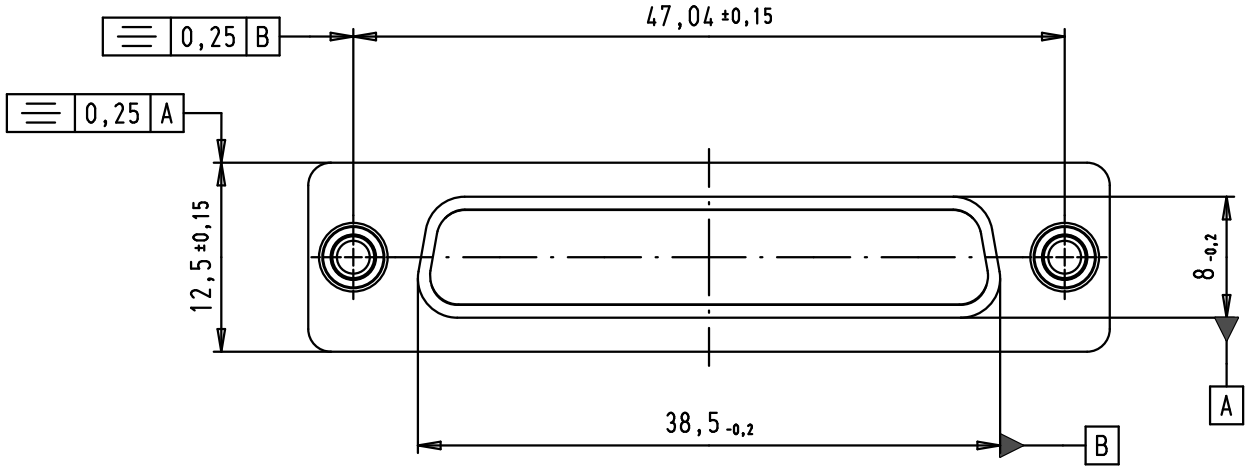

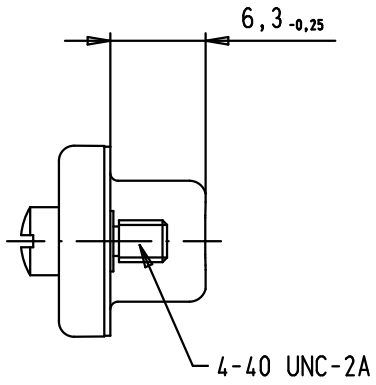

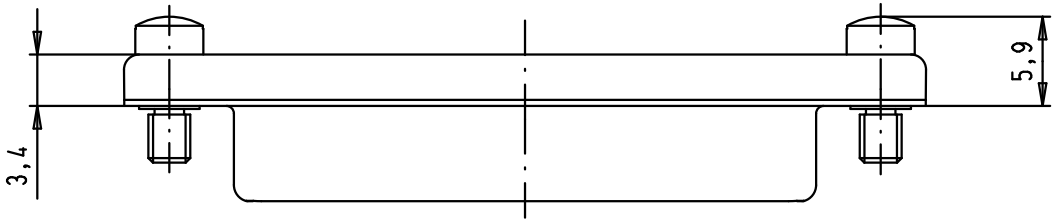

IP 67 shielding concept

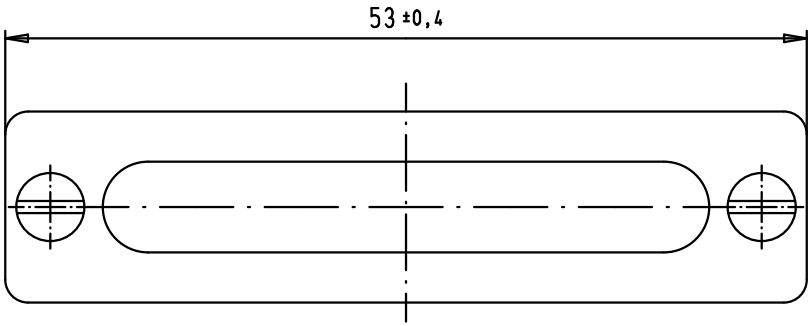

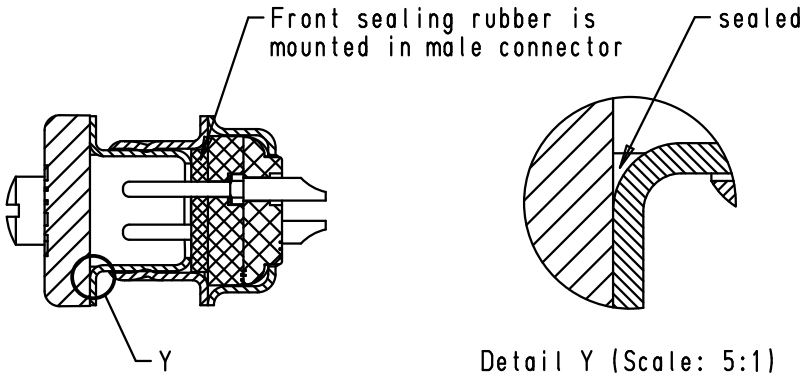

Front sealing rubber 09 67 002 9003 must be purchased separately

				Dat.	Name
			Detail.	12/04/07	PK
			Insp.		
			Stand.		
34906	18/04/08	PK			
33977	12/04/07	PK			
Mod.	Dat.	Name			

All Dim. in mm
Orig. Size DIN A 4

HARTING EURL
F-95972 Paris

IP 67 female metal shielding cap, tin plated shell for 25 poles male D-Sub with screw locks

Maßstab/ *Scale* 2:1

TB 09 67 002 9062

Sub.

Blatt/ *Page* 1/1

Downloaded from Arrow.com.