| DATE | REV | ECN | APP'D. BY |
|---|---|---|---|
| 08/31/21 | A0 | 11827 | JME |
| – | – | – | – |

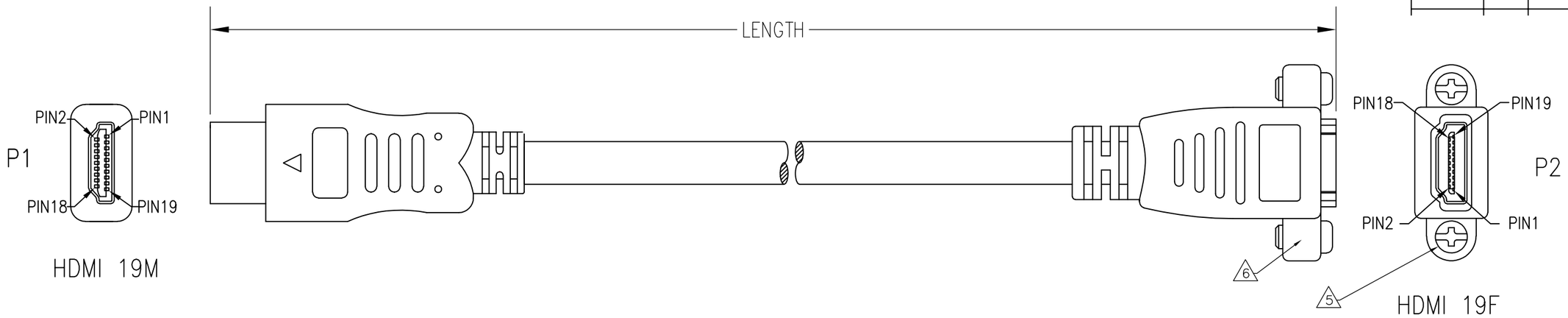


## WIRING MAP

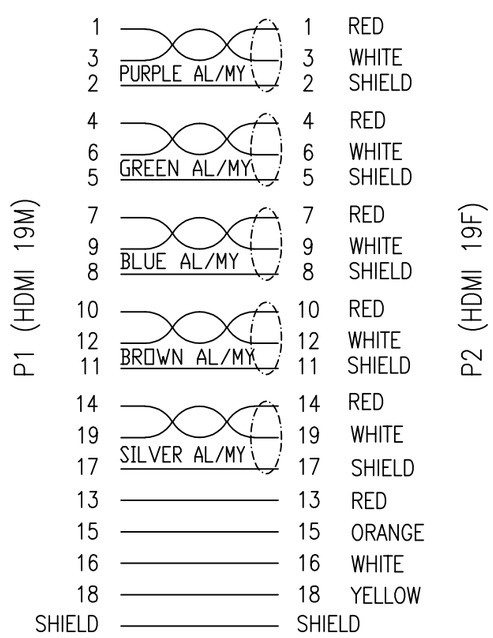


## PART NUMBER KEY

**BC-H F xxx F**

- CABLE FAMILY
- CONNECTOR (P1): H = HDMI MALE
- CONNECTOR (P2): F = HDMI FEMALE
- LENGTH: 1 FT = 001; 3 FT = 003; 6 FT = 006; 10 FT = 010
- UNITS: F = FEET

| TYPICAL PART NUMBERS | |
|---|---|
| PART NUMBER | LENGTH FEET [METERS] |
| BC-HF001F | 1 [0.30] |
| BC-HF003F | 3 [0.91] |
| BC-HF006F | 6 [1.82] |
| BC-HF010F | 10 [3.05] |
| FOR PART NUMBERS NOT SHOWN FOLLOW PART NUMBER KEY FORMAT | |

RoHS

NOTES:

1. EACH CABLE ASSEMBLY INDIVIDUALLY BAGGED
2. CONNECTOR (P1): HDMI 19 MALE, GOLD FLASH ON CONTACTS, GOLD CONNECTOR, BLACK INSULATOR
3. CONNECTOR (P2): HDMI 19 FEMALE, GOLD FLASH ON CONTACTS, GOLD CONNECTOR, BLACK INSULATOR, WITH PCB
4. WIRE CONSTRUCTION: UL20276;28 AWG, BLACK JACKET, OD 0.287" [7.3 mm]
5. SCREW: 5.5 X 8MM, 4-40# (INCLUDED)
6. HEX-NUT: 5 X 7.7MM, 4-40#

THIRD ANGLE PROJECTION

DO NOT SCALE DRAWING
DRAWING IS SUBJECT TO CHANGE WITHOUT NOTICE
DIMENSIONS: INCHES [METRIC]
UNLESS OTHERWISE SPECIFIED TOLERANCES ARE ±.005 [0.13] ANGLES ARE ± 1°
SHEET NO. 1 OF 1


206 Van Vorst Street
Jersey City, NJ 07302
+1 201 432 0463
http://www.belfuse.com


TITLE: HDMI 1.4 CABLE, MALE TO FEMALE


THIS DRAWING AND THE SUBJECT MATTER SHOWN THEREON ARE CONFIDENTIAL AND THE PROPRIETARY PROPERTY OF BEL FUSE, INC. AND SHALL NOT BE REPRODUCED, COPIED, OR USED IN ANY MANNER WITHOUT PRIOR WRITTEN CONSENT OF BEL FUSE, INC.


| | | | |
|---|---|---|---|
| DRN BY: | BTS | DATE | 08/16/21 |
| APPD BY: | JME | DATE | 08/31/21 |
| DWG NO. | CT999264 | REV. | A0 |

AutoCAD

Downloaded from Arrow.com.