1 MHz to 10 GHz, 62 dB Dual Log Detector/Controller

FEATURES

- Wide bandwidth: 1 MHz to 10 GHz
- Dual-channel and channel difference output ports
- Integrated accurate scaled temperature sensor
- 62 dB dynamic range (±3 dB)
- >50 dB with ±1 dB up to 8 GHz
- Stability over temperature: ±0.5 dB (−40°C to +85°C)
- Low noise detector/controller outputs
- Pulse response time: 6 ns/8 ns (fall time/rise time)
- Supply operation: 3.3 V to 5.5 V @ 60 mA
- Fabricated using high speed SiGe process
- Small footprint, 5 mm × 5 mm, 32-lead LFCSP
- Operating temperature range: −40°C to +125°C

APPLICATIONS

- RF transmitter power amplifier linearization and gain/power control
- Power monitoring in radio link transmitters
- Dual-channel wireless infrastructure radios
- Antenna VSWR monitor
- RSSI measurement in base stations, WLAN, WiMAX, radar

FUNCTIONAL BLOCK DIAGRAM

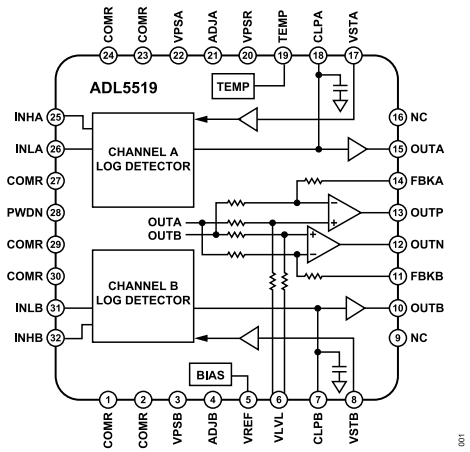

Figure 1.

GENERAL DESCRIPTION

The ADL5519 is a dual-demodulating logarithmic amplifier that incorporates two AD8317s. It can accurately convert an RF input signal into a corresponding decibel-scaled output. The ADL5519 provides accurately scaled, independent, logarithmic output voltages for both RF measurement channels. The device has two additional output ports, OUTP and OUTN, that provide the measured differences between the OUTA and OUTB channels. The on-chip channel matching makes the log amp outputs insensitive to temperature and process variations.

The temperature sensor pin provides a scaled voltage that is proportional to the temperature over the operating temperature range of the device.

The ADL5519 maintains accurate log conformance for signals from 1 MHz to 8 GHz and provides useful operation to 10 GHz. The ±3 dB dynamic range is typically 62 dB and has a ±1 dB dynamic range of >50 dB (re: 50 Ω). The ADL5519 has a response time of 6 ns/8 ns (fall time/rise time) that enables RF burst detection to a pulse rate of greater than 50 MHz. The device provides unprecedented logarithmic intercept stability vs. ambient temperature conditions. A supply of 3.3 V to 5.5 V is required to power the device. Current consumption is typically 60 mA, and it decreases to less than 1 mA when the device is disabled.

The device is capable of supplying four log amp measurements simultaneously. Linear-in-dB measurements are provided at OUTA and OUTB with conveniently scaled slopes of −22 mV/dB. The log amp difference between OUTA and OUTB is available as differential or single-ended signals at OUTP and OUTN. An optional voltage applied to VLVL provides a common-mode reference level to offset OUTP and OUTN above ground. The broadband output pins can support many system solutions.

Any of the ADL5519 output pins can be configured to provide a control voltage to a variable gain amplifier (VGA). Special attention has been paid to minimize the broadband noise of the output pins so that they can be used for controller applications.

The ADL5519 is fabricated on a SiGe bipolar IC process and is available in a 5 mm × 5 mm, 32-lead LFCSP with an operating temperature range of −40°C to +125°C.

©2008-2026 Analog Devices, Inc. All rights reserved.
Downloaded from Arrow.com.

TABLE OF CONTENTS

Features ... 1
Applications ... 1
Functional Block Diagram ... 1
General Description ... 1
Specifications ... 3
Absolute Maximum Ratings ... 9
ESD Caution ... 9
Pin Configuration and Function Descriptions ... 10
Typical Performance Characteristics ... 11
Theory of Operation ... 20
Using the ADL5519 ... 21
Basic Connections ... 21
Input Signal Coupling ... 21
Temperature Sensor Interface ... 22
VREF Interface ... 22
Power-Down Interface ... 22
Setpoint Interface—VSTA, VSTB ... 22
Output Interface—OUTA, OUTB ... 22
Difference Output—OUTP, OUTN ... 22
Description of Characterization ... 23
Basis for Error Calculations ... 23
Device Calibration ... 23
Adjusting Accuracy Through Choice of Calibration Points ... 24
Temperature Compensation Adjustment ... 25
Altering the Slope ... 25
Channel Isolation ... 25
Output Filtering ... 26
Package Considerations ... 26
Operation Above 8 GHz ... 26
Applications Information ... 28
Measurement Mode ... 28
Controller Mode ... 28
Automatic Gain Control ... 29
Gain-Stable Transmitter/Receiver ... 30
Measuring VSWR ... 31
Evaluation Board ... 33
Configuration Options ... 33
Evaluation Board Schematic and Artwork ... 34
Outline Dimensions ... 36
Ordering Guide ... 36
Evaluation Boards ... 36

REVISION HISTORY

7/2026—Rev. C to Rev. D

Changed Slave to Subordinate (Throughout) ... 1
Changes to Figure 45 ... 18

Downloaded from Arrow.com.

SPECIFICATIONS

Supply voltage, V_P = VPSR = VPSA = VPSB = 5 V, C_{LPF} = 1000 pF, T_A = 25°C, 50 Ω termination resistor at INHA, INHB, unless otherwise noted.

Table 1.

Parameter	Conditions	Min	Typ	Max	Unit
SIGNAL INPUT INTERFACE	INHA, INHB (Pin 25, Pin 32)				
Specified Frequency Range		0.001		10	GHz
DC Common-Mode Voltage			V_P − 0.7		V
MEASUREMENT MODE, 100 MHz OPERATION	ADJA (Pin 21) = 0.65 V, ADJB (Pin 4) = 0.7 V; OUTA, OUTB (Pin 15, Pin 10) shorted to VSTA, VSTB (Pin 17, Pin 8); OUTP, OUTN (Pin 13, Pin 12) shorted to FBKA, FBKB (Pin 14, Pin 11), respectively; sinusoidal input signal; error referred to best-fit line using linear regression between P_{INHA}, P_{INHB} = −40 dBm and −10 dBm				
Input Impedance			1670‖0.47		Ω‖pF
OUTA, OUTB ± 1 dB Dynamic Range			51		dB
	−40°C < T_A < +85°C		42		dB
OUTA, OUTB Maximum Input Level	±1 dB error		−1		dBm
OUTA, OUTB Minimum Input Level	±1 dB error		−52		dBm
OUTA, OUTB, OUTP, OUTN Slope[1]			−22		mV/dB
OUTA, OUTB Intercept[1]			22		dBm
Output Voltage (High Power In)	OUTA, OUTB @ P_{INHA}, P_{INHB} = −16 dBm		0.7		V
Output Voltage (Low Power In)	OUTA, OUTB @ P_{INHA}, P_{INHB} = −40 dBm		1.37		V
OUTP, OUTN Dynamic Gain Range	±1 dB error		50		dB
	−40°C < T_A < +85°C		44		dB
Temperature Sensitivity	Deviation from OUTA, OUTB @ 25°C				
	−40°C < T_A < +85°C, P_{INHA}, P_{INHB} = −16 dBm		±0.25		dB
	25°C < T_A < 85°C, P_{INHA}, P_{INHB} = −40 dBm		+0.16		dB
	−40°C < T_A < +25°C, P_{INHA}, P_{INHB} = −40 dBm		−0.6		dB
	Distribution of OUTP, OUTN from 25°C				
	25°C < T_A < 85°C, P_{INHA} = −16 dBm, P_{INHB} = −30 dBm, typical error = −0.09 dB		±0.25		dB
	−40°C < T_A < +25°C, P_{INHA} = −16 dBm, P_{INHB} = −30 dBm, typical error = 0.25 dB		±0.4		dB
	25°C < T_A < 85°C, P_{INHA} = −40 dBm, P_{INHB} = −30 dBm, typical error = 0.05 dB		±0.25		dB
	−40°C < T_A < +25°C, P_{INHA} = −40 dBm, P_{INHB} = −30 dBm, typical error = −0.23 dB		±0.45		dB
Input A-to-Input B Isolation			80		dB
Input A-to-OUTB Isolation	Frequency separation = 1 kHz, P_{INHA} = −50 dBm, P_{INHA} – P_{INHB} when OUTB/Slope = 1 dB		60		dB
Input B-to-OUTA Isolation	Frequency separation = 1 kHz, P_{INHB} = −50 dBm, P_{INHB} – P_{INHA} when OUTA/Slope = 1 dB		60		dB
MEASUREMENT MODE, 900 MHz OPERATION	ADJA = 0.6 V, ADJB = 0.65 V; OUTA, OUTB shorted to VSTA, VSTB; OUTP, OUTN shorted to FBKA, FBKB, respectively; sinusoidal input signal; error referred to best fit line using linear regression between P_{INHA}, P_{INHB} = −40 dBm and −10 dBm				
Input Impedance			925‖0.54		Ω‖pF
OUTA, OUTB ± 1 dB Dynamic Range			54		dB
	−40°C < T_A < +85°C		49		dB
OUTA, OUTB Maximum Input Level	±1 dB error		−2		dBm
OUTA, OUTB Minimum Input Level	±1 dB error		−56		dBm
OUTA, OUTB, OUTP, OUTN Slope[1]			−22		mV/dB
OUTA, OUTB Intercept[1]			20.3		dBm

Downloaded from Arrow.com.

SPECIFICATIONS

Table 1. (Continued)

Parameter	Conditions	Min	Typ	Max	Unit
Output Voltage (High Power In)	OUTA, OUTB @ P_{INHA}, P_{INHB} = −10 dBm		0.67		V
Output Voltage (Low Power In)	OUTA, OUTB @ P_{INHA}, P_{INHB} = −40 dBm		1.34		V
OUTP, OUTN Dynamic Gain Range	±1 dB error		55		dB
	−40°C < T_A < +85°C		48		dB
Temperature Sensitivity	Deviation from OUTA, OUTB @ 25°C				
	−40°C < T_A < +85°C, P_{INHA}, P_{INHB} = −16 dBm		±0.25		dB
	25°C < T_A < 85°C, P_{INHA}, P_{INHB} = −40 dBm		+0.25		dB
	−40°C < T_A < +25°C, P_{INHA}, P_{INHB} = −40 dBm		−0.5		dB
	Distribution OUTP, OUTN from 25°C				
	25°C < T_A < 85°C, P_{INHA} = −16 dBm, P_{INHB} = −30 dBm, typical error = −0.08 dB		±0.25		dB
	−40°C < T_A < +25°C, P_{INHA} = −16 dBm, P_{INHB} = −30 dBm, typical error = 0.3 dB		±0.4		dB
	25°C < T_A < 85°C, P_{INHA} = −40 dBm, P_{INHB} = −30 dBm, typical error = 0.17 dB		±0.25		dB
	−40°C < T_A < +25°C, P_{INHA} = −40 dBm, P_{INHB} = −30 dBm, typical error = −0.19 dB		±0.4		dB
Input A-to-Input B Isolation			75		dB
Input A-to-OUTB Isolation	Frequency separation = 1 kHz, P_{INHA} = −50 dBm, P_{INHA} – P_{INHB} when OUTB/Slope = 1 dB		50		dB
Input B-to-OUTA Isolation	Frequency separation = 1 kHz, P_{INHB} = −50 dBm, P_{INHB} – P_{INHA} when OUTA/Slope = 1 dB		50		dB
MEASUREMENT MODE, 1.9 GHz OPERATION	ADJA = 0.5 V, ADJB = 0.55 V; OUTA, OUTB shorted to VSTA, VSTB; OUTP, OUTN shorted to FBKA, FBKB, respectively; sinusoidal input signal; error referred to best fit line using linear regression between P_{INHA}, P_{INHB} = −40 dBm and −10 dBm				
Input Impedance			525‖0.36		Ω‖pF
OUTA, OUTB ± 1 dB Dynamic Range			55		dB
	−40°C < T_A < +85°C		49		dB
OUTA, OUTB Maximum Input Level	±1 dB error		−4		dBm
OUTA, OUTB Minimum Input Level	±1 dB error		−59		dBm
OUTA, OUTB, OUTP, OUTN Slope[1]			−22		mV/dB
OUTA, OUTB Intercept[1]			18		dBm
Output Voltage (High Power In)	OUTA, OUTB @ P_{INHA}, P_{INHB} = −10 dBm		0.62		V
Output Voltage (Low Power In)	OUTA, OUTB @ P_{INHA}, P_{INHB} = −40 dBm		1.28		V
OUTP, OUTN Dynamic Gain Range	±1 dB error		55		dB
	−40°C < T_A < +85°C		48		dB
Temperature Sensitivity	Deviation from OUTA, OUTB @ 25°C				
	−40°C < T_A < +85°C, P_{INHA}, P_{INHB} = −16 dBm		±0.2		dB
	25°C < T_A < 85°C, P_{INHA}, P_{INHB} = −40 dBm		+0.25		dB
	−40°C < T_A < +25°C, P_{INHA}, P_{INHB} = −40 dBm		−0.5		dB
	Distribution of OUTP, OUTN from 25°C				
	25°C < T_A < 85°C, P_{INHA} = −16 dBm, P_{INHB} = −30 dBm, typical error = −0.07 dB		±0.3		dB
	−40°C < T_A < +25°C, P_{INHA} = −16 dBm, P_{INHB} = −30 dBm, typical error = 0.23 dB		±0.4		dB
	25°C < T_A < 85°C, P_{INHA} = −40 dBm, P_{INHB} = −30 dBm, typical error = 0.16 dB		±0.3		dB
	−40°C < T_A < +25°C, P_{INHA} = −40 dBm, P_{INHB} = −30 dBm, typical error = −0.22 dB		±0.4		dB

Downloaded from Arrow.com.

SPECIFICATIONS

Table 1. (Continued)

Parameter	Conditions	Min	Typ	Max	Unit
Input A-to-Input B Isolation			65		dB
Input A-to-OUTB Isolation	Frequency separation = 1 kHz, P_{INHA} = −50 dBm, P_{INHA} – P_{INHB} when OUTB/Slope = 1 dB		46		dB
Input B-to-OUTA Isolation	Frequency separation = 1 kHz, P_{INHB} = −50 dBm, P_{INHB} – P_{INHA} when OUTA/Slope = 1 dB		46		dB
MEASUREMENT MODE, 2.2 GHz OPERATION	ADJA = 0.48 V, ADJB = 0.6 V; OUTA, OUTB shorted to VSTA, VSTB; OUTP, OUTN shorted to FBKA, FBKB, respectively; sinusoidal input signal; error referred to best fit line using linear regression between P_{INHA}, P_{INHB} = −40 dBm and −10 dBm				
Input Impedance			408||0.34		Ω||pF
OUTA, OUTB ± 1 dB Dynamic Range			55		dB
	−40°C < T_A < +85°C		50		dB
OUTA, OUTB Maximum Input Level	±1 dB error		−5		dBm
OUTA, OUTB Minimum Input Level	±1 dB error		−60		dBm
OUTA, OUTB, OUTP, OUTN Slope[1]			−22		mV/dB
OUTA, OUTB Intercept[1]			16.9		dBm
Output Voltage (High Power In)	OUTA, OUTB @ P_{INHA}, P_{INHB} = −10 dBm		0.6		V
Output Voltage (Low Power In)	OUTA, OUTB @ P_{INHA}, P_{INHB} = −40 dBm		1.26		V
OUTP, OUTN Dynamic Gain Range	±1 dB error		56		dB
	−40°C < T_A < +85°C		40		dB
Temperature Sensitivity	Deviation from OUTA, OUTB @ 25°C				
	−40°C < T_A < +85°C, P_{INHA}, P_{INHB} = −16 dBm		±0.28		dB
	25°C < T_A < 85°C, P_{INHA}, P_{INHB} = −40 dBm		+0.3		dB
	−40°C < T_A < +25°C, P_{INHA}, P_{INHB} = −40 dBm		−0.5		dB
	Distribution of OUTP, OUTN from 25°C				
	25°C < T_A < 85°C, P_{INHA} = −16 dBm, P_{INHB} = −30 dBm, typical error = −0.07 dB		±0.25		dB
	−40°C < T_A < +25°C, P_{INHA} = −16 dBm, P_{INHB} = −30 dBm, typical error = 0.25 dB		±0.4		dB
	25°C < T_A < 85°C, P_{INHA} = −40 dBm, P_{INHB} = −30 dBm, typical error = 0.17 dB		±0.25		dB
	−40°C < T_A < +25°C, P_{INHA} = −40 dBm, P_{INHB} = −30 dBm, typical error = −0.22dB		±0.4		dB
Input A-to-Input B Isolation			60		dB
Input A-to-OUTB Isolation	Frequency separation = 1 kHz, P_{INHA} = −50 dBm, P_{INHA} – P_{INHB} when OUTB/Slope = 1 dB		46		dB
Input B-to-OUTA Isolation	Frequency separation = 1 kHz, P_{INHB} = −50 dBm, P_{INHB} – P_{INHA} when OUTA/Slope = 1 dB		46		dB
MEASUREMENT MODE, 3.6 GHz OPERATION	ADJA = 0.35 V ADJB = 0.42; OUTA, OUTB shorted to VSTA, VSTB; OUTP, OUTN shorted to FBKA, FBKB, respectively; sinusoidal input signal; error referred to best fit line using linear regression between P_{INHA}, P_{INHB} = −40 dBm and −10 dBm				
Input Impedance			187||0.66		Ω||pF
OUTA, OUTB ± 1 dB Dynamic Range			54		dB
	−40°C < T_A < +85°C		44		dB
OUTA, OUTB Maximum Input Level	±1 dB error		−4		dBm
OUTA, OUTB Minimum Input Level	±1 dB error		−58		dBm
OUTA, OUTB, OUTP, OUTN Slope[1]			−22.5		mV/dB
OUTA, OUTB Intercept[1]			17		dBm
Output Voltage (High Power In)	OUTA, OUTB @ P_{INHA}, P_{INHB} = −10 dBm		0.62		V

Downloaded from Arrow.com.

SPECIFICATIONS

Table 1. (Continued)

Parameter	Conditions	Min	Typ	Max	Unit
Output Voltage (Low Power In)	OUTA, OUTB @ P_{INHA}, P_{INHB} = −40 dBm		1.31		V
OUTP, OUTN Dynamic Gain Range	±1 dB error		52		dB
	−40°C < T_A < +85°C		42		dB
Temperature Sensitivity	Deviation from OUTA, OUTB @ 25°C				
	−40°C < T_A < +85°C, P_{INHA}, P_{INHB} = −16 dBm		±0.4		dB
	25°C < T_A < 85°C, P_{INHA}, P_{INHB} = −40 dBm		+0.6		dB
	−40°C < T_A < +25°C, P_{INHA}, P_{INHB} = −40 dBm		−0.45		dB
	Distribution of OUTP, OUTN from 25°C				
	25°C < T_A < 85°C, P_{INHA} = −16 dBm, P_{INHB} = −30 dBm, typical error = −0.07 dB		±0.25		dB
	−40°C < T_A < +25°C, P_{INHA} = −16 dBm, P_{INHB} = −30 dBm, typical error = 0.27 dB		±0.45		dB
	25°C < T_A < 85°C, P_{INHA} = −40 dBm, P_{INHB} = −30 dBm, typical error = 0.31 dB		±0.3		dB
	−40°C < T_A < +25°C, P_{INHA} = −40 dBm, P_{INHB} = −30 dBm, typical error = −0.14 dB		±0.5		dB
Input A-to-Input B Isolation			40		dB
Input A-to-OUTB Isolation	Frequency separation = 1 kHz, P_{INHA} = −50 dBm, P_{INHA} – P_{INHB} when OUTB/Slope = 1 dB		20		dB
Input B-to-OUTA Isolation	Frequency separation = 1 kHz, P_{INHB} = −50 dBm, P_{INHB} – P_{INHA} when OUTA/Slope = 1 dB		20		dB
MEASUREMENT MODE, 5.8 GHz OPERATION	ADJA = 0.58 V, ADJB = 0.7 V; OUTA, OUTB shorted to VSTA, VSTB; OUTP, OUTN shorted to FBKA, FBKB respectively; sinusoidal input signal; error referred to best fit line using linear regression between P_{INHA}, P_{INHB} = −40 dBm and −20 dBm				
Input Impedance			28‖1.19		Ω‖pF
OUTA, OUTB ± 1 dB Dynamic Range			53		dB
	−40°C < T_A < +85°C		45		dB
OUTA, OUTB Maximum Input Level	±1 dB error		−2		dBm
OUTA, OUTB Minimum Input Level	±1 dB error		−55		dBm
OUTA, OUTB, OUTP, OUTN Slope[1]			−22.5		mV/dB
OUTA, OUTB Intercept[1]			20		dBm
Output Voltage (High Power In)	OUTA, OUTB @ P_{INHA}, P_{INHB} = −10 dBm		0.68		V
Output Voltage (Low Power In)	OUTA, OUTB @ P_{INHA}, P_{INHB} = −40 dBm		1.37		V
OUTP, OUTN Dynamic Gain Range	±1 dB error		53		dB
	−40°C < T_A < +85°C		46		dB
Temperature Sensitivity	Deviation from OUTA, OUTB @ 25°C				
	−40°C < T_A < +85°C, P_{INHA}, P_{INHB} = −16dBm		±0.25		dB
	25°C < T_A < 85°C, P_{INHA}, P_{INHB} = −40 dBm		+0.25		dB
	−40°C < T_A < +25°C, P_{INHA}, P_{INHB} = −40 dBm		−0.4		dB
	Distribution of OUTP, OUTN from 25°C				
	25°C < T_A < 85°C, P_{INHA} = −16 dBm, P_{INHB} = −30 dBm, typical error = 0.02 dB		±0.3		dB
	−40°C < T_A < +25°C, P_{INHA} = −16 dBm, P_{INHB} = −30 dBm, typical error = 0.25 dB		±0.4		dB
	25°C < T_A < 85°C, P_{INHA} = −40 dBm, P_{INHB} = −30 dBm, typical error = 0.13 dB		±0.3		dB
	−40°C < T_A < +25°C, P_{INHA} = −40 dBm, P_{INHB} = −30 dBm, typical error = 0.06 dB		±0.5		dB
Input A-to-Input B Isolation			45		dB

Downloaded from Arrow.com.

SPECIFICATIONS

Table 1. (Continued)

Parameter	Conditions	Min	Typ	Max	Unit
Input A-to-OUTB Isolation	Frequency separation = 1 kHz, P_{INHA} = −50 dBm, P_{INHA} − P_{INHB} when OUTB/Slope = 1 dB		48		dB
Input B-to-OUTA Isolation	Frequency separation = 1 kHz, P_{INHB} = −50 dBm, P_{INHB} − P_{INHA} when OUTA/Slope = 1 dB		48		dB
MEASUREMENT MODE, 8 GHz OPERATION	ADJA = 0.72 V, ADJB = 0.82 V to GND; OUTA, OUTB shorted to VSTA, VSTB; OUTP, OUTN shorted to FBKA, FBKB, respectively; sinusoidal input signal; error referred to best fit line using linear regression between P_{INHA}, P_{INHB} = −40 dBm and −20 dBm				
Input Impedance			+10||−1.92		Ω||pF
OUTA, OUTB ± 1 dB Dynamic Range			48		dB
	−40°C < T_A < +85°C		38		dB
OUTA, OUTB Maximum Input Level	±1 dB error		0		dBm
OUTA, OUTB Minimum Input Level	±1 dB error		−48		dBm
OUTA, OUTB, OUTP, OUTN Slope[1]			−22		mV/dB
OUTA, OUTB Intercept[1]			26		dBm
Output Voltage (High Power In)	OUTA, OUTB @ P_{INHA}, P_{INHB} = −10 dBm		0.81		V
Output Voltage (Low Power In)	OUTA, OUTB @ P_{INHA}, P_{INHB} = −40 dBm		1.48		V
OUTP, OUTN Dynamic Gain Range	±1 dB error		50		dB
	−40°C < T_A < +85°C		42		dB
Temperature Sensitivity	Deviation from OUTA, OUTB @ 25°C				
	−40°C < T_A < +85°C, P_{INHA}, P_{INHB} = −16 dBm		±0.4		dB
	25°C < T_A < 85°C, P_{INHA}, P_{INHB} = −40 dBm		−0.1		dB
	−40°C < T_A < +25°C, P_{INHA}, P_{INHB} = −40 dBm		+0.5		dB
	Distribution of OUTP, OUTN from 25°C				
	25°C < T_A < 85°C, P_{INHA} = −16 dBm, P_{INHB} = −30 dBm, typical error = 0.2dB		±0.3		dB
	−40°C < T_A < +25°C, P_{INHA} = −16 dBm, P_{INHB} = −30 dBm, typical error = 0.09dB		±0.5		dB
	25°C < T_A < 85°C, P_{INHA} = −40 dBm, P_{INHB} = −30 dBm, typical error = −0.07dB		±0.3		dB
	−40°C < T_A < +25°C, P_{INHA} = −40 dBm, P_{INHB} = −30 dBm, typical error = 0.17 dB		±0.5		dB
Input A-to-Input B Isolation			45		dB
Input A-to-OUTB Isolation	Frequency separation = 1 kHz, P_{INHA} = −50 dBm, P_{INHA} − P_{INHB} when OUTB/Slope = 1 dB		30		dB
Input B-to-OUTA Isolation	Frequency separation = 1 kHz, P_{INHB} = −50 dBm, P_{INHB} − P_{INHA} when OUTA/Slope = 1 dB		30		dB
OUTPUT INTERFACE	OUTA, OUTB; OUTP, OUTN				
OUTA, OUTB Voltage Range	VSTA, VSTB = 1.7 V, RF in = open		0.3		V
	VSTA, VSTB = 0 V, RF in = open		V_P − 0.4		V
OUTP, OUTN Voltage Range	FBKA, FBKB = open and OUTA < OUTB, R_L ≥ 240 Ω to ground		0.09		V
	FBKA, FBKB = open and OUTA > OUTB, R_L ≥ 240 Ω to ground		V_P − 0.15		V
Source/Sink Current	Output held at 1 V to 1% change		10		mA
Capacitance Drive			1		nF
Output Noise	INHA, INHB = 2.2 GHz, −10 dBm, f_{NOISE} = 100 kHz, CLPA, CLPB = open		10		nV/√Hz
Fall Time	Input level = no signal to −10 dBm, 80% to 20%, CLPA, CLPB = 10 pF		12		ns
	Input level = no signal to −10 dBm, 80% to 20%, CLPA, CLPB = open		6		ns
Rise Time	Input level = −10 dBm to no signal, 20% to 80%, CLPA, CLPB = 10 pF		16		ns
	Input level = −10 dBm to no signal, 20% to 80%, CLPA, CLPB = open		8		ns
Video Bandwidth (or Envelope Bandwidth)			10		MHz

Downloaded from Arrow.com.

SPECIFICATIONS

Table 1. (Continued)

Parameter	Conditions	Min	Typ	Max	Unit
SETPOINT INTERFACE	VSTA, VSTB				
Nominal Input Range	Input level = 0 dBm, measurement mode		0.38		V
	Input level = –50 dBm, measurement mode		1.6		V
Input Resistance	Controller mode, sourcing 50 µA		40		kΩ
DIFFERENCE LEVEL ADJUST	VLVL (Pin 6)				
Input Voltage	OUTP, OUTN = FBKA, FBKB			V_P − 1	V
Input Resistance	OUTP, OUTN = FBKA, FBKB		100		kΩ
TEMPERATURE COMPENSATION	ADJA, ADJB				
Input Resistance	ADJA, ADJB = 0.9 V, sourcing 50 µA		13		kΩ
Disable Threshold Voltage	ADJA, ADJB = open		V_P − 0.4		V
VOLTAGE REFERENCE	VREF (Pin 5)				
Output Voltage			1.15		V
Temperature Sensitivity	−40°C < T_A < +25°C; relative T_A = 25°C		+26		µV/°C
	25°C < T_A < 85°C; relative T_A = 25°C		−26		µV/°C
Current Limit Source/Sink			3/3		mA
TEMPERATURE REFERENCE	TEMP (Pin 19)				
Output Voltage			1.36		V
Temperature Sensitivity	−40°C < T_A < +125°C		4.5		mV/°C
Current Limit Source/Sink			4/50		mA/µA
POWER-DOWN INTERFACE	PWDN (Pin 28)				
Logic Level to Enable	Logic low enables		0		V
Logic Level to Disable	Logic high disables		V_P − 0.2		V
Input Current	Logic high PWDN = 5 V		2		µA
	Logic low PWDN = 0 V		20		µA
Enable Time	PWDN low to OUTA, OUTB at 100% final value, CLPA, CLPB = open, RF in = −10 dBm		0.4		µs
Disable Time	PWDN high to OUTA, OUTB at 10% final value, CLPA, CLPB = open, RF in = 0 dBm		0.25		µs
POWER INTERFACE	VPSA, VPSB, VPSR				
Supply Voltage		3.3		5.5	V
Quiescent Current			60		mA
vs. Temperature	−40°C ≤ T_A ≤ +85°C		147		µA/°C
Disable Current	ADJA, ADJB = PWDN = V_P		<1		mA

[1] Slope and intercept are determined by calculating the best-fit line between the power levels of −40 dBm and −10 dBm at the specified input frequency.

Downloaded from Arrow.com.

ABSOLUTE MAXIMUM RATINGS

Table 2.

Parameter	Rating
Supply Voltage: VPSA, VPSB, VPSR	5.7 V
V_{SET} Voltage: VSTA, VSTB	0 to V_P
Input Power (Single-Ended, Re: 50 Ω) INHA, INLA, INHB, INLB	12 dBm
Internal Power Dissipation	420 mW
θ_{JA}	42°C/W
Maximum Junction Temperature	142°C
Operating Temperature Range	−40°C to +125°C
Storage Temperature Range	−65°C to +150°C
Lead Temperature (Soldering, 60 sec)	260°C

Stresses at or above those listed under Absolute Maximum Ratings may cause permanent damage to the product. This is a stress rating only; functional operation of the product at these or any other conditions above those indicated in the operational section of this specification is not implied. Operation beyond the maximum operating conditions for extended periods may affect product reliability.

ESD CAUTION

ESD (electrostatic discharge) sensitive device. Charged devices and circuit boards can discharge without detection. Although this product features patented or proprietary protection circuitry, damage may occur on devices subjected to high energy ESD. Therefore, proper ESD precautions should be taken to avoid performance degradation or loss of functionality.

Downloaded from Arrow.com.

PIN CONFIGURATION AND FUNCTION DESCRIPTIONS

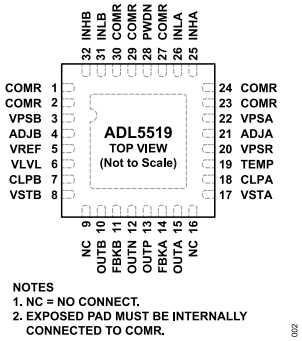

Figure 2. Pin Configuration

Table 3. Pin Function Descriptions

Pin No.	Mnemonic	Description
1	COMR	Connect via low impedance to common.
2	COMR	Connect via low impedance to common.
3	VPSB	Positive Supply for Channel B. Apply 3.3 V to 5.5 V supply voltage.
4	ADJB	Dual-Function Pin: Temperature Adjust Pin for Channel B and Power-Down Interface for OUTB.
5	VREF	Voltage Reference (1.15 V).
6	VLVL	DC Common-Mode Adjust for Difference Output.
7	CLPB	Loop Filter Pin for Channel B.
8	VSTB	Setpoint Control Input for Channel B.
9	NC	No Connect.
10	OUTB	Output Voltage for Channel B.
11	FBKB	Difference Op Amp Feedback Pin for OUTN Op Amp.
12	OUTN	Difference Output (OUTB − OUTA + VLVL).
13	OUTP	Difference Output (OUTA − OUTB + VLVL).
14	FBKA	Difference Op Amp Feedback Pin for OUTP Op Amp.
15	OUTA	Output Voltage for Channel A.
16	NC	No Connect.
17	VSTA	Setpoint Control Input for Channel A.
18	CLPA	Loop Filter Pin for Channel A.
19	TEMP	Temperature Sensor Output (1.3 V with 4.5 mV/°C Slope).
20	VPSR	Positive Supply for Difference Outputs and Temperature Sensor. Apply 3.3 V to 5.5 V supply voltage.
21	ADJA	Dual-Function Pin: Temperature Adjust Pin for Channel A and Power-Down Interface for OUTA.
22	VPSA	Positive Supply for Channel A. Apply 3.3 V to 5.5 V supply voltage.
23	COMR	Connect via low impedance to common.
24	COMR	Connect via low impedance to common.
25	INHA	AC-Coupled RF Input for Channel A.
26	INLA	AC-Coupled RF Common for Channel A.
27	COMR	Connect via low impedance to common.
28	PWDN	Power-Down for Difference Output and Temperature Sensor.
29	COMR	Connect via low impedance to common.
30	COMR	Connect via low impedance to common.
31	INLB	AC-Coupled RF Common for Channel B.
32	INHB	AC-Coupled RF Input for Channel B.
	Paddle	Internally connected to COMR.

Downloaded from Arrow.com.

TYPICAL PERFORMANCE CHARACTERISTICS

V_P = 5 V; T_A = +25°C, −40°C, +85°C; CLPA, CLPB = 1 µF. Colors: +25°C black, −40°C blue, +85°C red.

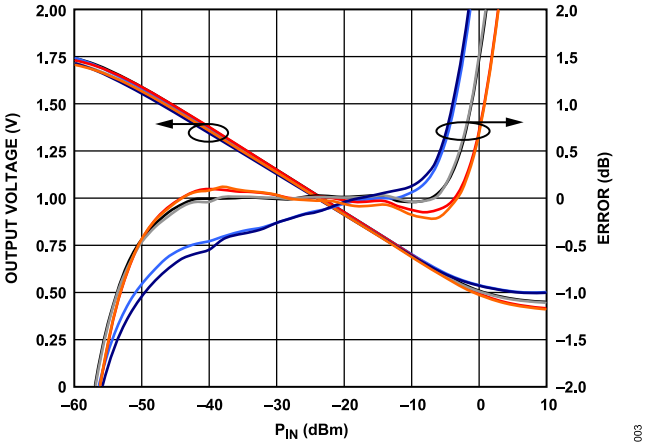

Figure 3. OUTA, OUTB Voltage and Log Conformance vs. Input Amplitude at 100 MHz, Typical Device, ADJA, ADJB = 0.65 V, 0.7 V, Sine Wave, Single-Ended Drive

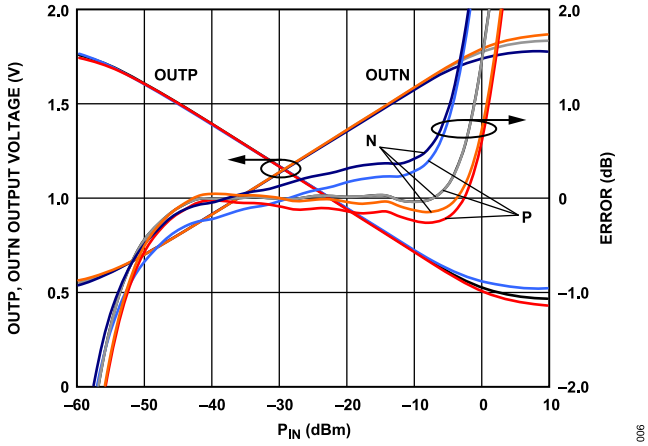

Figure 6. OUTP, OUTN Gain Error and Voltage vs. Input Amplitude at 100 MHz, Typical Device, ADJA, ADJB = 0.65 V, 0.7, Sine Wave, Single-Ended Drive, P_{INHB} = −30 dBm, Channel A Swept

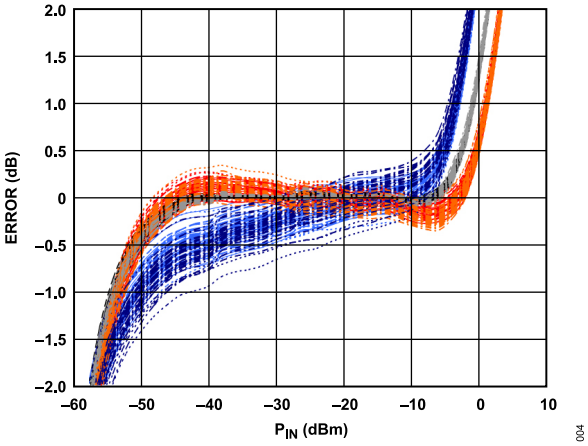

Figure 4. Distribution of OUTA, OUTB Error over Temperature After Ambient Normalization vs. Input Amplitude for 45 Devices, Frequency = 100 MHz, ADJA, ADJB = 0.65 V, 0.7 V, Sine Wave, Single-Ended Drive

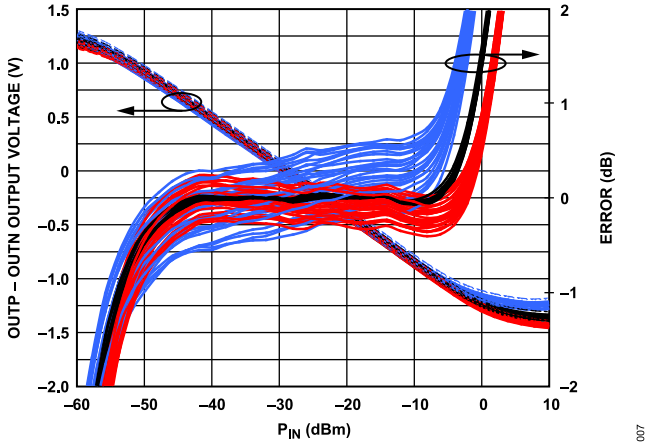

Figure 7. Distribution of [OUTP − OUTN] Gain Error and Voltage vs. Input Amplitude over Temperature, After Ambient Normalization for 45 Devices from a Nominal Lot, Frequency = 100 MHz, ADJA, ADJB = 0.65 V, 0.7 V, Sine Wave, Single-Ended Drive, P_{INHB} = −30 dBm, Channel A Swept

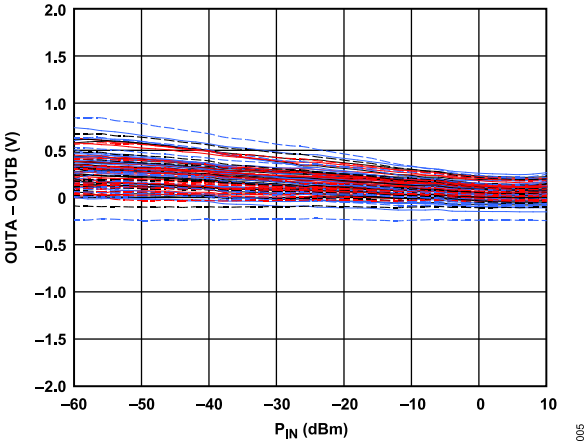

Figure 5. Distribution of [OUTA − OUTB] Voltage Difference over Temperature for 45 Devices from a Nominal Lot, Frequency = 100 MHz, ADJA, ADJB = 0.65 V, 0.7 V, Sine Wave, Single-Ended Drive

Downloaded from Arrow.com.

TYPICAL PERFORMANCE CHARACTERISTICS

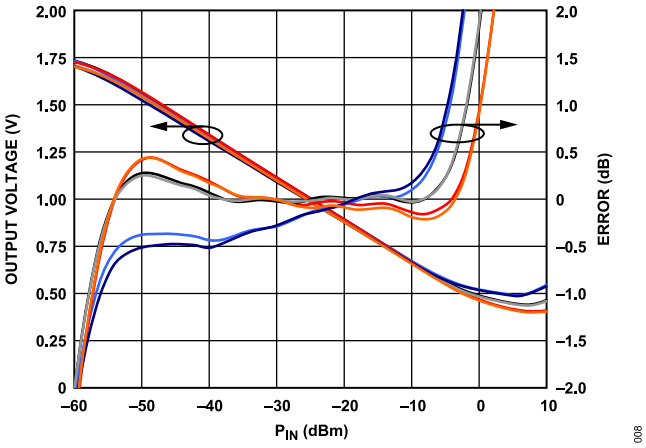

Figure 8. OUTA, OUTB Voltage and Log Conformance vs. Input Amplitude at 900 MHz, Typical Device, ADJA, ADJB = 0.6 V, 0.65 V, Sine Wave, Single-Ended Drive

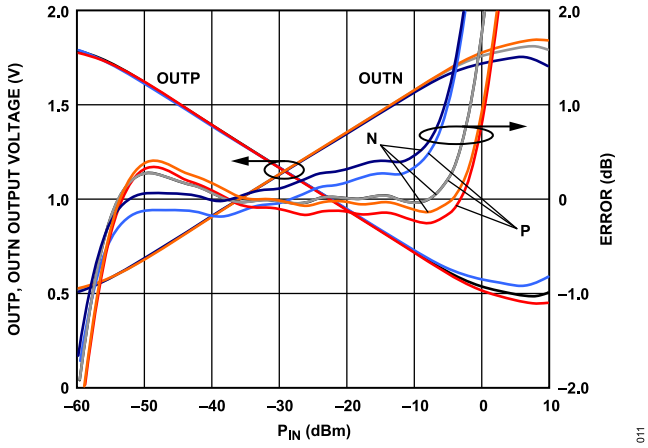

Figure 11. OUTP, OUTN Gain Error and Voltage vs. Input Amplitude at 900 MHz, Typical Device, ADJA, ADJB = 0.6 V, 0.65 V, Sine Wave, Single-Ended Drive; P_{INHB} = −30 dBm, Channel A Swept

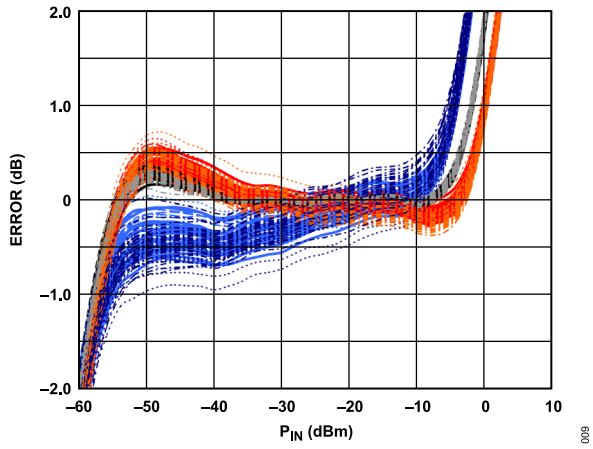

Figure 9. Distribution of OUTA, OUTB Error over Temperature After Ambient Normalization vs. Input Amplitude for 45 Devices, Frequency = 900 MHz, ADJA, ADJB = 0.6 V, 0.65 V, Sine Wave, Single-Ended Drive

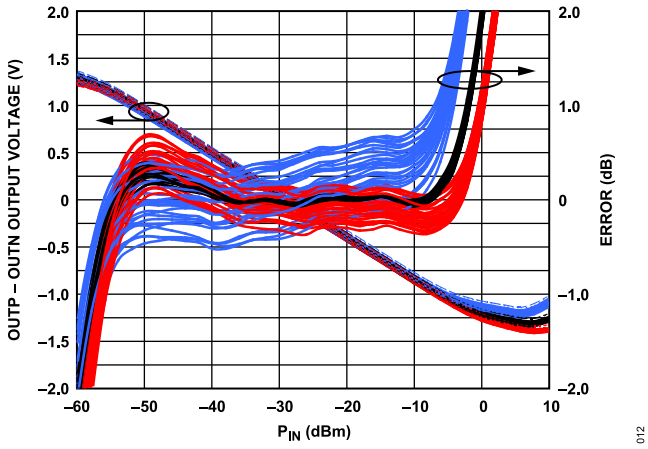

Figure 12. Distribution of [OUTP − OUTN] Gain Error and Voltage vs. Input Amplitude over Temperature, After Ambient Normalization for 45 Devices from a Nominal Lot, Frequency = 900 MHz, ADJA, ADJB = 0.6 V, 0.65 V, Sine Wave, Single-Ended Drive, P_{INHB} = −30 dBm, Channel A Swept

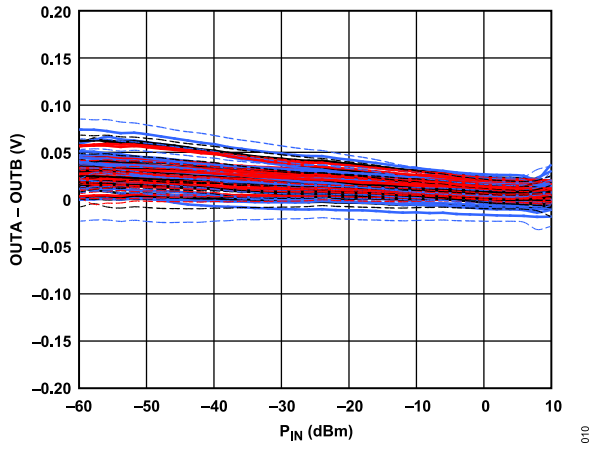

Figure 10. Distribution of [OUTA − OUTB] Voltage Difference over Temperature for 45 Devices from a Nominal Lot, Frequency = 900 MHz, ADJA, ADJB = 0.6 V, 0.65 V, Sine Wave, Single-Ended Drive

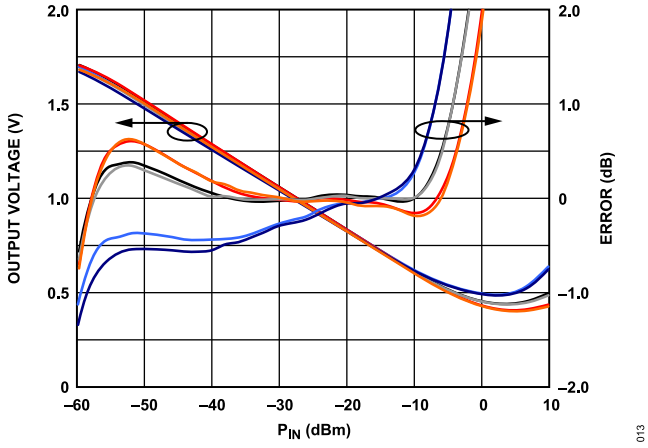

Figure 13. OUTA, OUTB Voltage and Log Conformance vs. Input Amplitude at 1.9 GHz, Typical Device, ADJA, ADJB = 0.5 V, 0.55 V, Sine Wave, Single-Ended Drive

Downloaded from Arrow.com.

TYPICAL PERFORMANCE CHARACTERISTICS

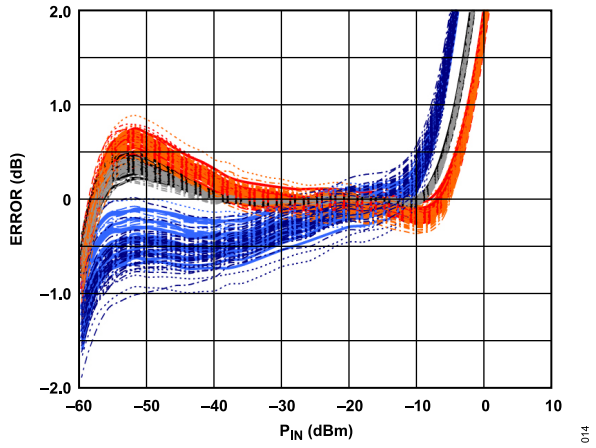

Figure 14. Distribution of OUTA, OUTB Error over Temperature After Ambient Normalization vs. Input Amplitude for 45 Devices, Frequency = 1.9 GHz, ADJA, ADJB = 0.5 V, 0.55 V, Sine Wave, Single-Ended Drive

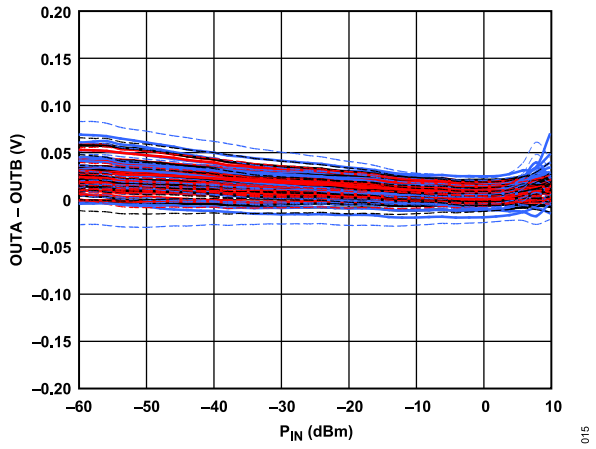

Figure 15. Distribution of [OUTA – OUTB] Voltage Difference over Temperature for 45 Devices from a Nominal Lot, Frequency = 1.9 GHz, ADJA, ADJB = 0.5 V, 0.55 V, Sine Wave, Single-Ended Drive

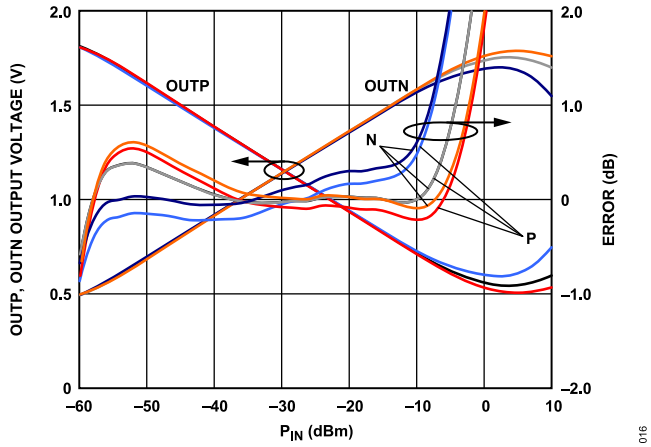

Figure 16. OUTP, OUTN Gain Error and Voltage vs. Input Amplitude at 1.9 GHz, with B Input Held at −30 dBm and A Input Swept, Typical Device, ADJA, ADJB = 0.5 V, 0.55 V, Sine Wave, Single-Ended Drive, P_{INHB} = −30 dBm, Channel A Swept

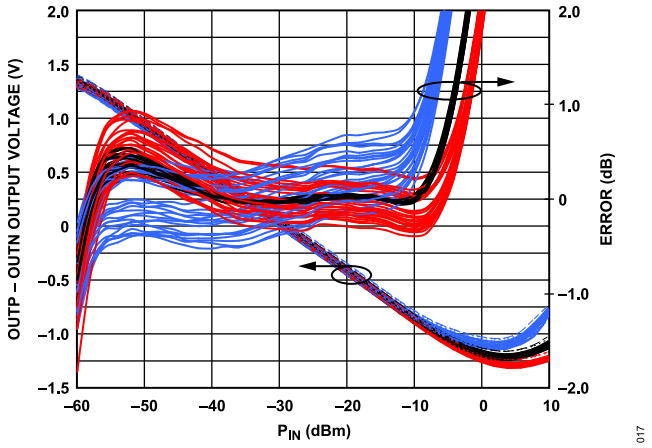

Figure 17. Distribution of [OUTP − OUTN] Gain Error and Voltage vs. Input Amplitude over Temperature, After Ambient Normalization for 45 Devices from a Nominal Lot, Frequency = 1.9 GHz, ADJA, ADJB = 0.5 V, 0.55 V, Sine Wave, Single-Ended Drive, P_{INHB} = −30 dBm, Channel A Swept

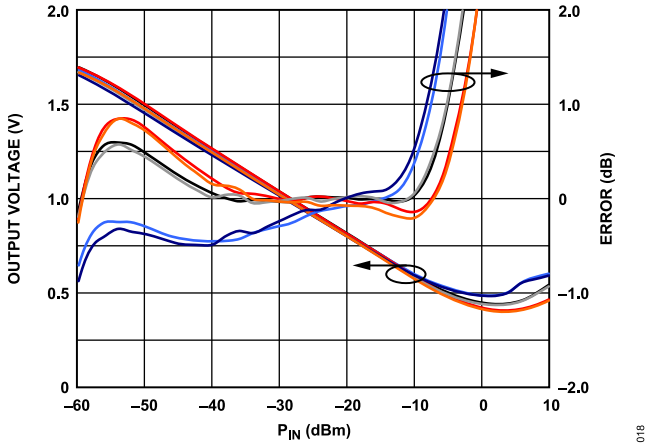

Figure 18. OUTA, OUTB Voltage and Log Conformance vs. Input Amplitude at 2.2 GHz, Typical Device, ADJA, ADJB = 0.48 V, 0.6 V, Sine Wave, Single-Ended Drive

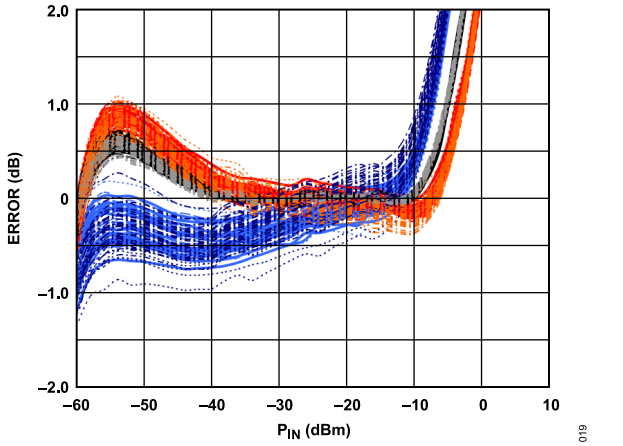

Figure 19. Distribution of OUTA, OUTB Error over Temperature After Ambient Normalization vs. Input Amplitude for at Least 45 Devices from a Nominal

Downloaded from Arrow.com.

TYPICAL PERFORMANCE CHARACTERISTICS

Lot, Frequency = 2.2 GHz, ADJA, ADJB = 0.48 V, 0.6 V, Sine Wave, Single-Ended Drive

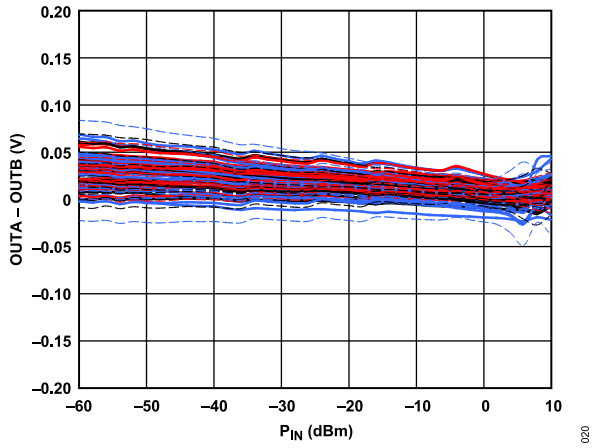

Figure 20. Distribution of [OUTA – OUTB] Voltage Difference over Temperature for 45 Devices from a Nominal Lot, Frequency = 2.2 GHz, ADJA, ADJB = 0.48 V, 0.6 V, Sine Wave, Single-Ended Drive

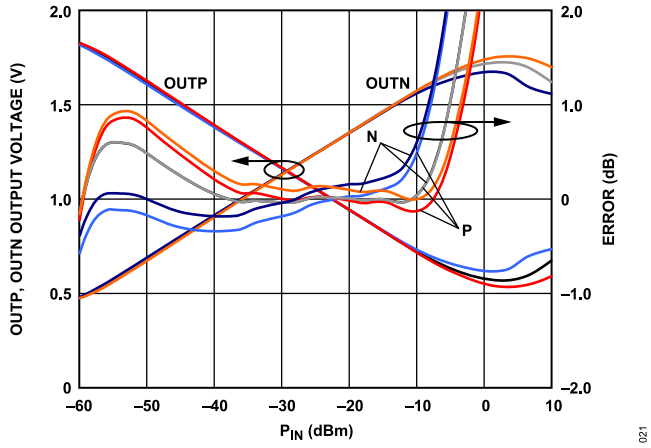

Figure 21. OUTP, OUTN Gain Error and Voltage vs. Input Amplitude at 2.2 GHz, Typical Device, ADJA, ADJB = 0.48 V, 0.6 V, Sine Wave, Single-Ended Drive, P_{INHB} = −30 dBm, Channel A Swept

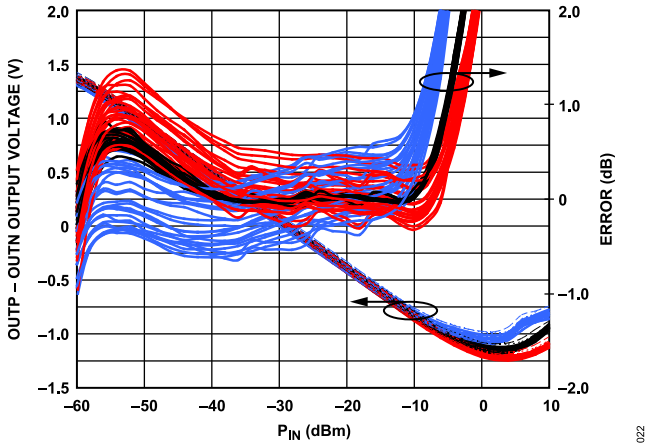

Figure 22. Distribution of [OUTP − OUTN] Gain Error and Voltage vs. Input Amplitude over Temperature, After Ambient Normalization for 45 Devices from a Nominal Lot, Frequency = 2.2 GHz, ADJA, ADJB = 0.48 V, 0.6 V, Sine Wave, Single-Ended Drive, P_{INHB} = −30 dBm, Channel A Swept

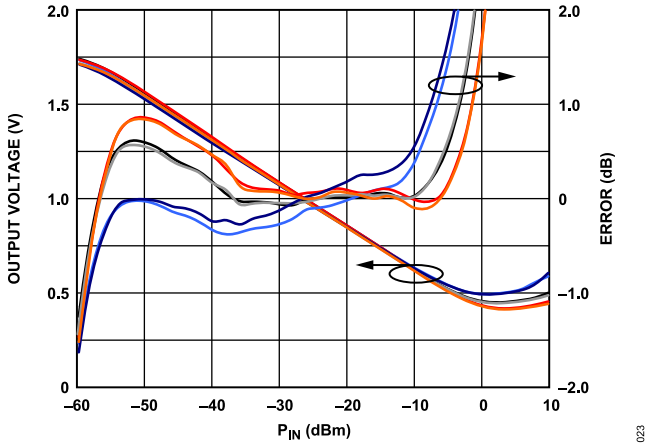

Figure 23. OUTA, OUTB Voltage and Log Conformance vs. Input Amplitude at 3.6 GHz, Typical Device, ADJA, ADJB = 0.35 V, 0.42 V, Sine Wave, Single-Ended Drive

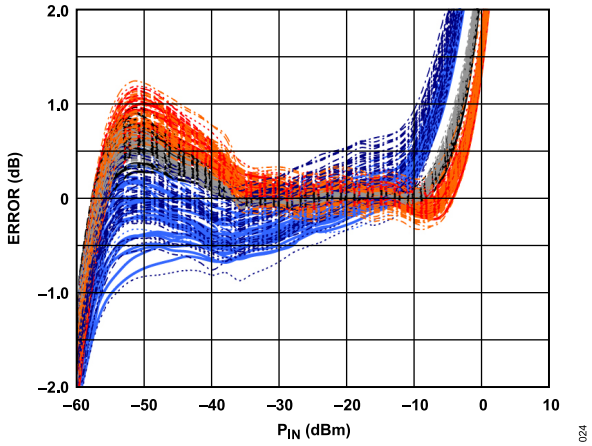

Figure 24. Distribution of OUTA, OUTB Error over Temperature After Ambient Normalization vs. Input Amplitude for 45 Devices from a Nominal Lot,

Downloaded from Arrow.com.

TYPICAL PERFORMANCE CHARACTERISTICS

Frequency = 3.6 GHz, ADJA, ADJB = 0.35 V, 0.42 V, Sine Wave, Single-Ended Drive

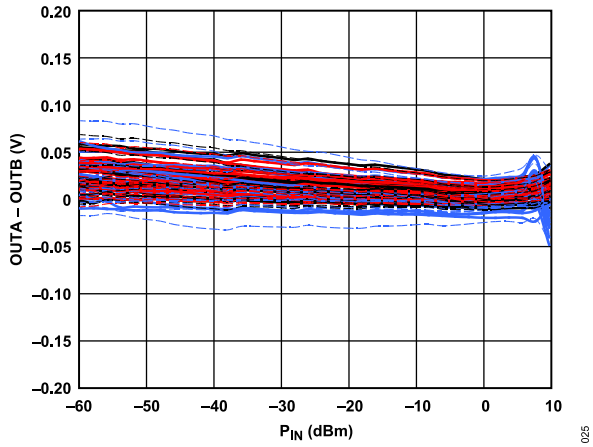

Figure 25. Distribution of [OUTA – OUTB] Voltage Difference over Temperature for 45 Devices from a Nominal Lot, Frequency = 3.6 GHz, ADJA, ADJB = 0.35 V, 0.42 V, Sine Wave, Single-Ended Drive

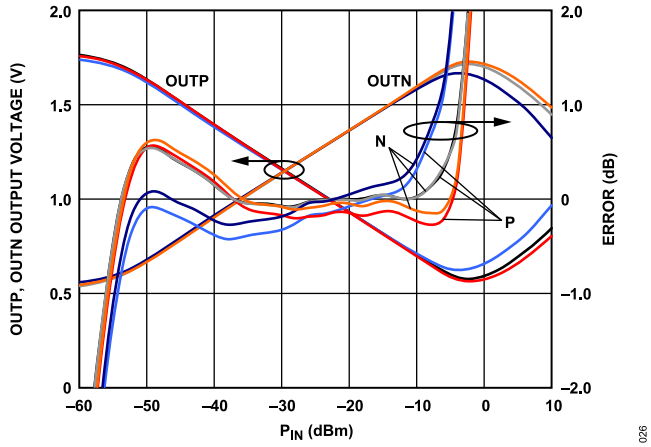

Figure 26. OUTP, OUTN Gain Error and Voltage vs. Input Amplitude at 3.6 GHz, Typical Device, ADJA, ADJB = 0.35 V, 0.42 V, Sine Wave, Single-Ended Drive; P_{INHB} = −30 dBm, Channel A Swept

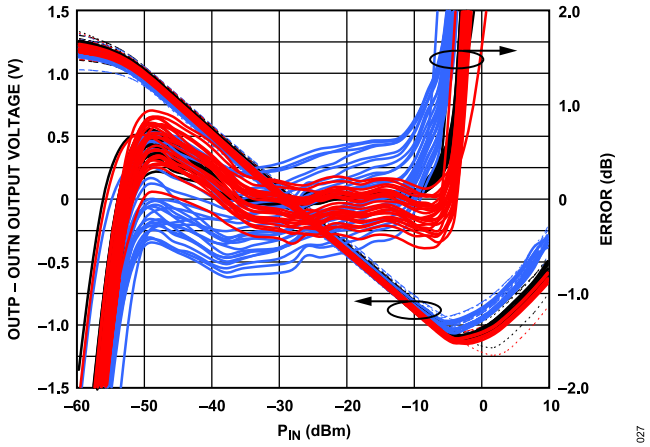

Figure 27. Distribution of [OUTP − OUTN] Gain Error and Voltage vs. Input Amplitude over Temperature, After Ambient Normalization for 45 Devices from a Nominal Lot, Frequency = 3.6 GHz, ADJA, ADJB = 0.35 V, 0.42 V, Sine Wave, Single-Ended Drive, P_{INHB} = −30 dBm, Channel A Swept

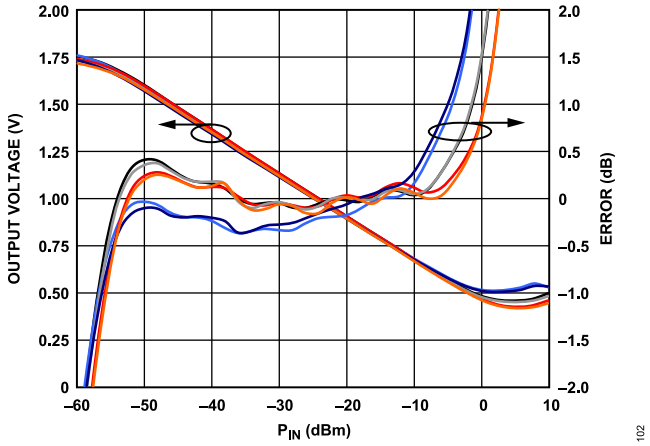

Figure 28. OUTA, OUTB Voltage and Log Conformance vs. Input Amplitude at 5.8 GHz, Typical Device, ADJA, ADJB = 0.58 V, 0.7 V, Sine Wave, Single-Ended Drive

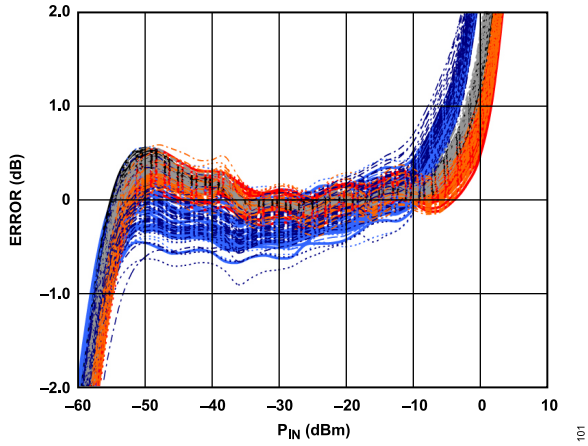

Figure 29. Distribution of OUTA, OUTB Error over Temperature After Ambient Normalization vs. Input Amplitude for at Least 15 Devices from Multiple Lots,

Downloaded from Arrow.com.

TYPICAL PERFORMANCE CHARACTERISTICS

Frequency = 5.8 GHz, ADJA, ADJB = 0.58 V, 0.7 V, Sine Wave, Single-Ended Drive

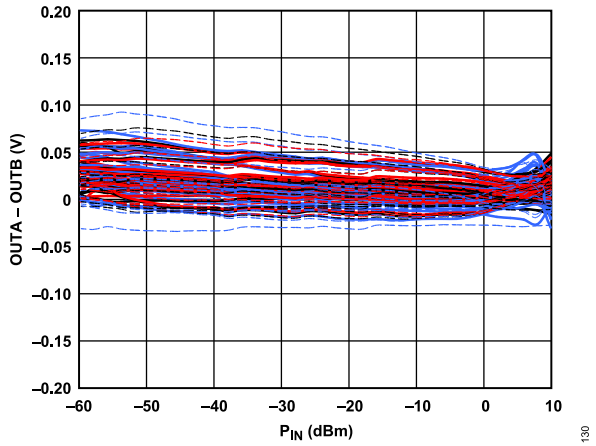

Figure 30. Distribution of [OUTA – OUTB] Voltage Difference over Temperature for 45 Devices from a Nominal Lot, Frequency = 5.8 GHz, ADJA, ADJB = 0.58 V, 0.7 V, Sine Wave, Single-Ended Drive

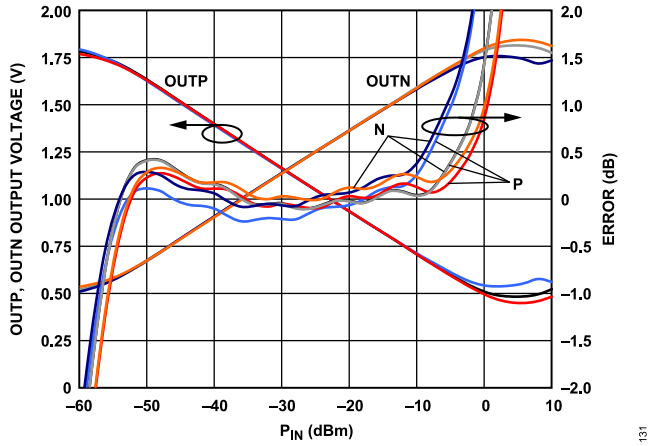

Figure 31. OUTP, OUTN Gain Error and Voltage vs. Input Amplitude at 5.8 GHz, Typical Device, ADJA, ADJB = 0.58 V, 0.7 V, Sine Wave, Single-Ended Drive, P_{INHB} = −30 dBm, Channel A Swept

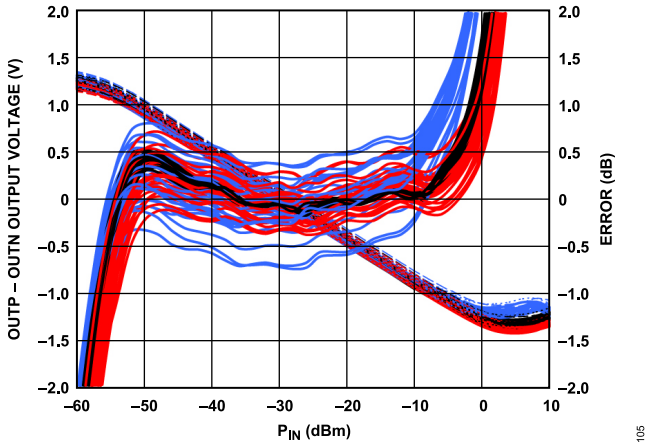

Figure 32. Distribution of [OUTP − OUTN] Gain Error and Voltage vs. Input Amplitude over Temperature, After Ambient Normalization for 45 Devices from a Nominal Lot, Frequency = 5.8 GHz, ADJA, ADJB = 0.58 V, 0.7 V, Sine Wave, Single-Ended Drive, P_{INHB} = −30 dBm, Channel A Swept

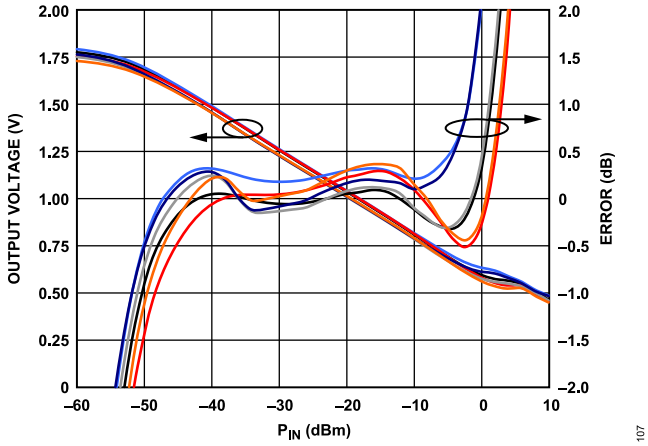

Figure 33. OUTA, OUTB Voltage and Log Conformance vs. Input Amplitude at 8 GHz, Typical Device, ADJA, ADJB = 0.72 V, 0.82 V, Sine Wave, Single-Ended Drive

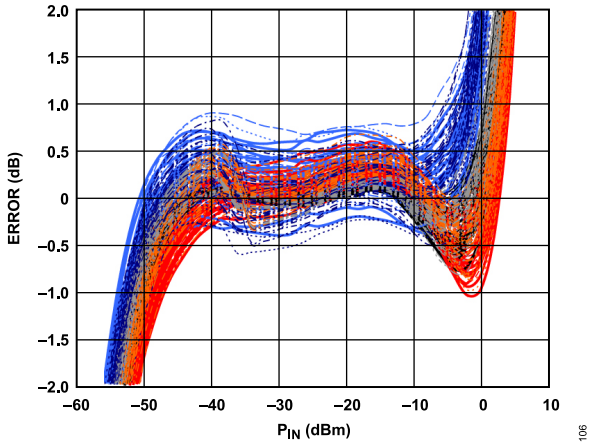

Figure 34. Distribution of OUTA, OUTB Error over Temperature After Ambient Normalization vs. Input Amplitude for 45 Devices from a Nominal Lot,

Downloaded from Arrow.com.

TYPICAL PERFORMANCE CHARACTERISTICS

Frequency = 8 GHz, ADJA, ADJB = 0.72 V, 0.82 V, Sine Wave, Single-Ended Drive

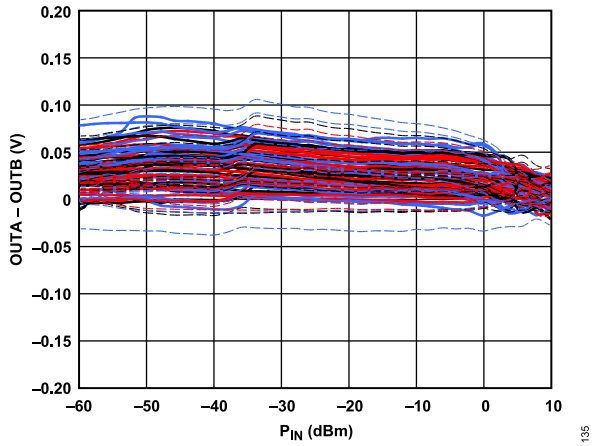

Figure 35. Distribution of [OUTA − OUTB] Voltage Difference over Temperature for 45 Devices from a Nominal Lot, Frequency = 8 GHz, ADJA, ADJB = 0.72 V, 0.82 V, Sine Wave, Single-Ended Drive

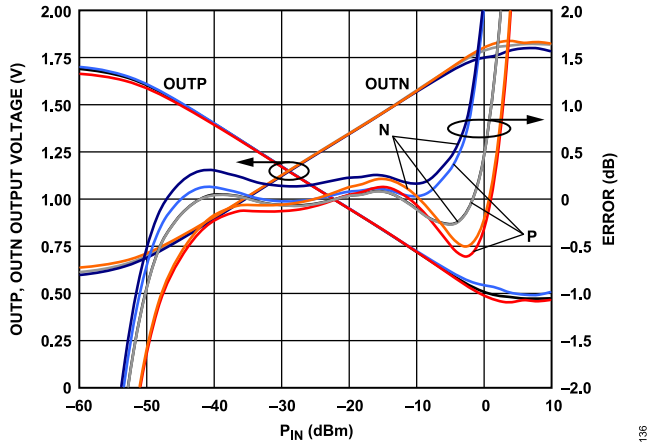

Figure 36. OUTP, OUTN Gain Error and Voltage vs. Input Amplitude at 8 GHz, Typical Device, ADJA, ADJB = 0.72 V, 0.82 V, Sine Wave, Single-Ended Drive, P_{INHB} = −30 dBm, Channel A Swept

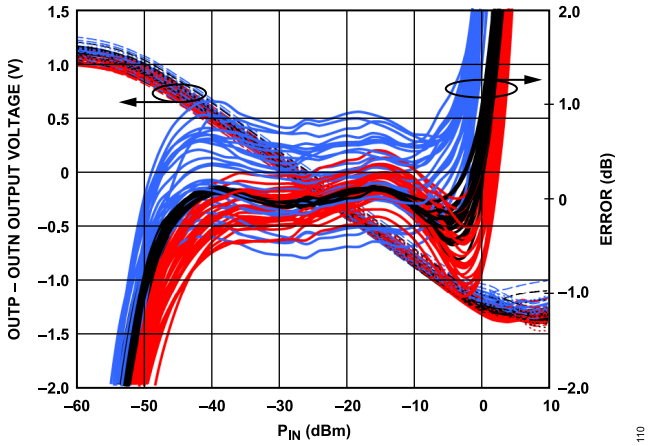

Figure 37. Distribution of [OUTP − OUTN] Gain Error and Voltage vs. Input Amplitude over Temperature, After Ambient Normalization for 45 Devices from a Nominal Lot, Frequency = 8 GHz, ADJA, ADJB = 0.72 V, 0.82 V, Sine Wave, Single-Ended Drive, P_{INHB} = −30 dBm, Channel A Swept

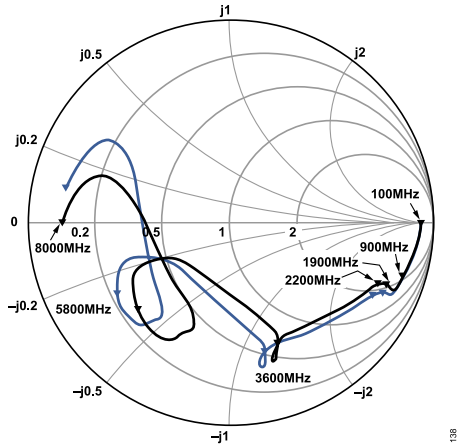

Figure 38. Single-Ended Input Impedance (S11) vs. Frequency; Z_O = 50 Ω

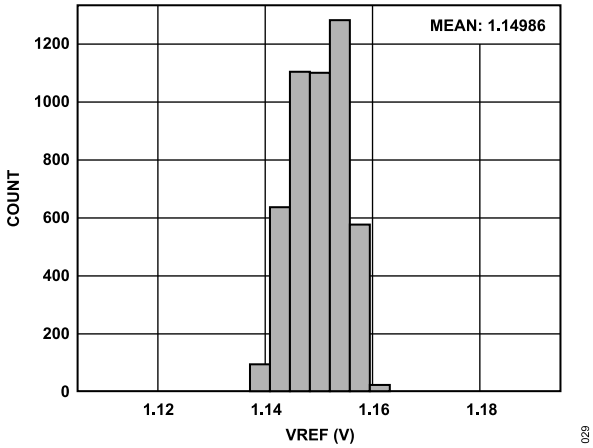

Figure 39. Distribution of VREF Pin Voltage for 4000 Devices

Downloaded from Arrow.com.

TYPICAL PERFORMANCE CHARACTERISTICS

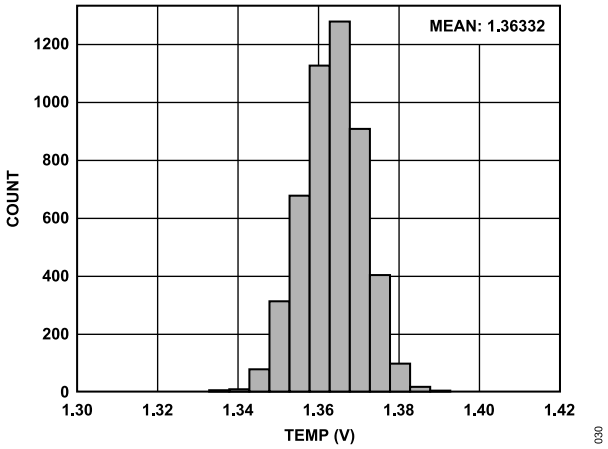

Figure 40. Distribution of TEMP Pin Voltage for 4000 Devices

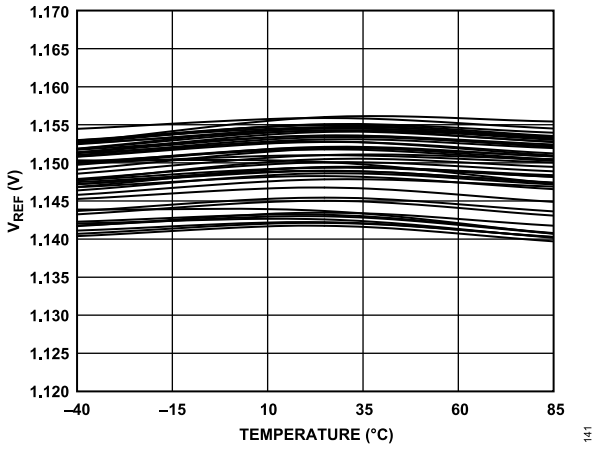

Figure 41. Change in VREF Pin Voltage vs. Temperature for 45 Devices

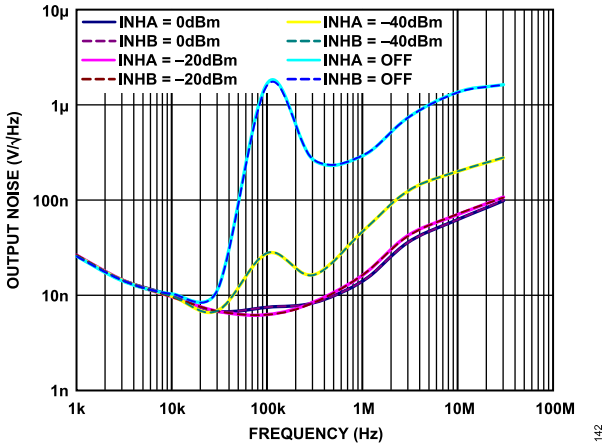

Figure 42. Noise Spectral Density of OUTA, OUTB; CLPA, CLPB = Open

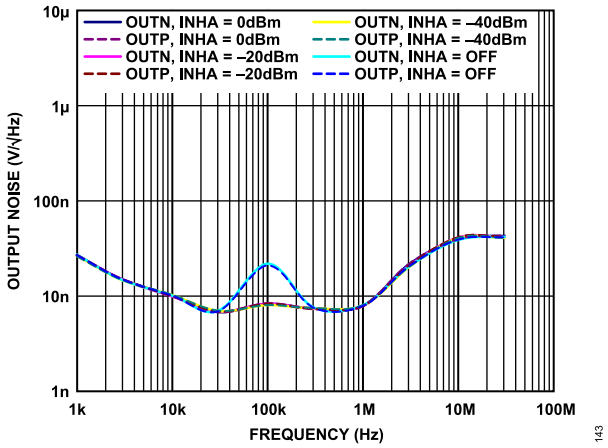

Figure 43. Noise Spectral Density of OUTP, OUTN; CLPA, CLPB = 0.1 µF, Frequency = 2140 MHz

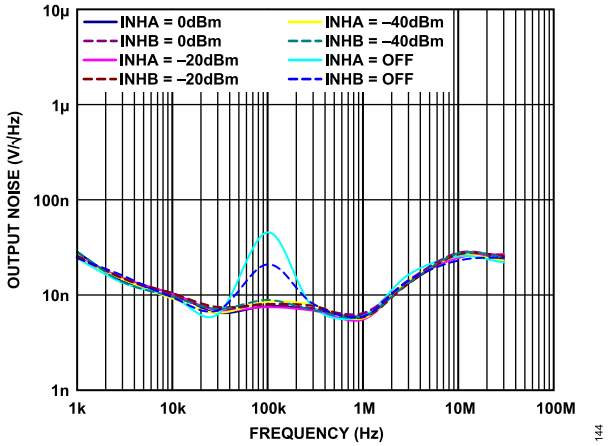

Figure 44. Noise Spectral Density of OUTA, OUTB; CLPA, CLPB = 0.1 µF, Frequency = 2140 MHz

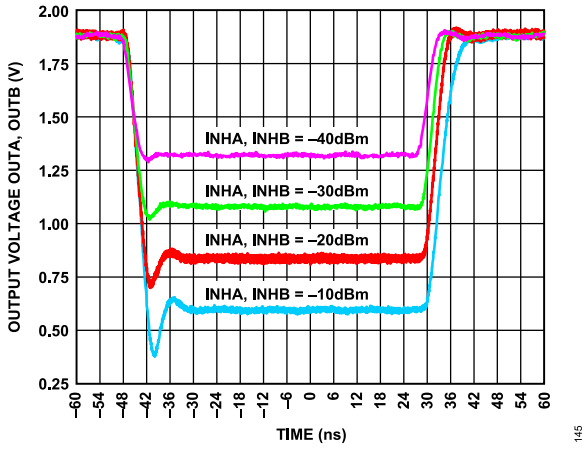

Figure 45. Output Response to RF Burst Input for Various RF Input Levels, Carrier Frequency = 900 MHz, CLPA = Open

Downloaded from Arrow.com.

TYPICAL PERFORMANCE CHARACTERISTICS

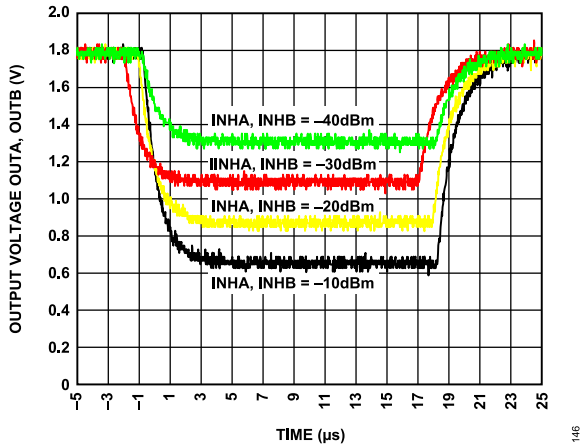

Figure 46. Output Response to RF Burst Input for Various RF Input Levels, Carrier Frequency = 900 MHz, CLPA = 0.1 µF

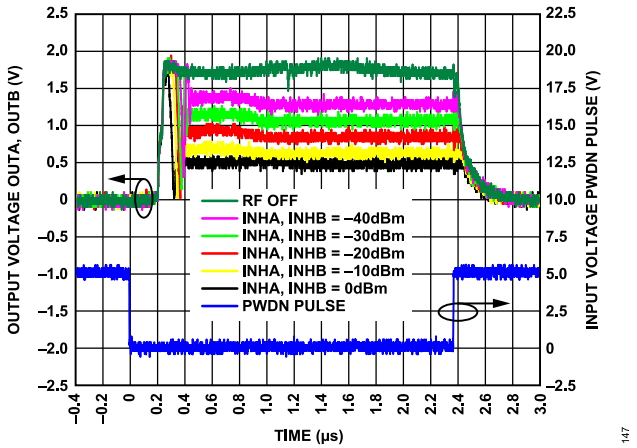

Figure 47. Output Response Using Power-Down Mode for Various RF Input Levels, Carrier Frequency = 900 MHz, CLPA = Open

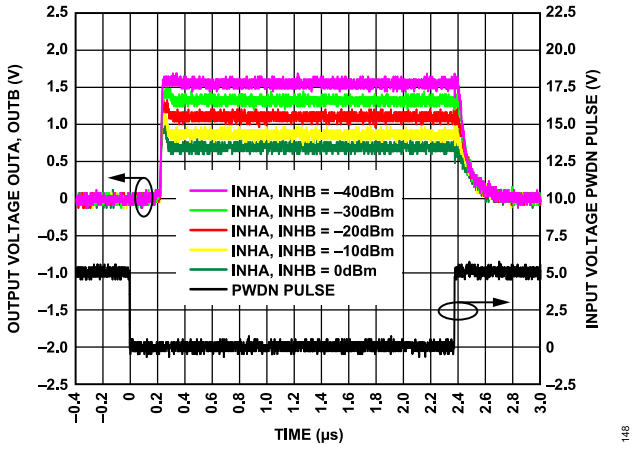

Figure 48. Output Response Using Power-Down Mode for Various RF Input Levels, Carrier Frequency = 900 MHz, CLPA = 0.1 µF

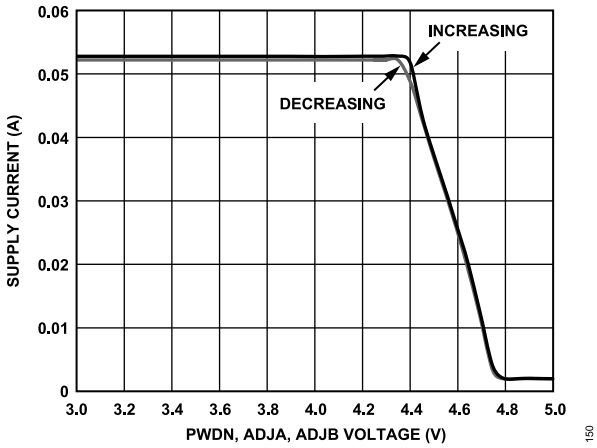

Figure 49. Supply Current vs. V_{PWDN}, V_{ADJA}, V_{ADJB}

Downloaded from Arrow.com.

THEORY OF OPERATION

The ADL5519 is a dual-channel, six-stage demodulating logarithmic amplifier that is specifically designed for use in RF measurement and power control applications at frequencies up to 10 GHz. The ADL5519 is a derivative of the AD8317 logarithmic detector/controller core. The ADL5519 maintains tight intercept variability vs. temperature over a 50 dB range. Each measurement channel offers performance equivalent to that of the AD8317. The complete circuit block diagram is shown in Figure 50.

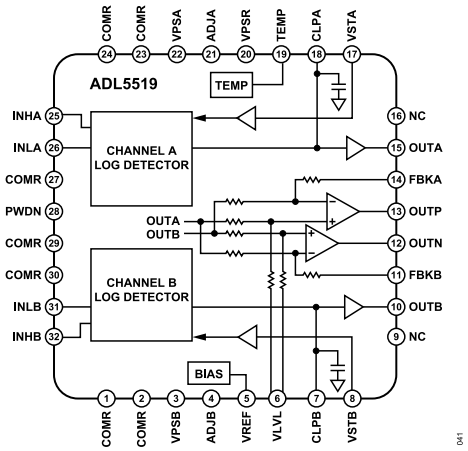

Figure 50. Block Diagram

Each measurement channel is a full differential design using a proprietary, high speed SiGe process that extends high frequency performance. Figure 51 shows the basic diagram of the Channel A signal path; its functionality is identical to that of the Channel B signal path.

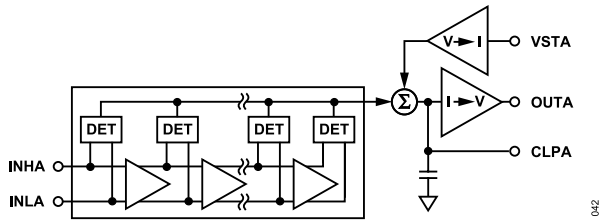

Figure 51. Single Channel Block Diagram

The maximum input with ±1 dB log conformance error is typically −5 dBm (re: 50 Ω). The noise spectral density referred to the input is 1.15 nV/√Hz, which is equivalent to a voltage of 118 μV rms in a 10.5 GHz bandwidth or a noise power of −66 dBm (re: 50 Ω). This noise spectral density sets the lower limit of the dynamic range. However, the low end accuracy of the ADL5519 is enhanced by specially shaping the demodulating transfer characteristic to partially compensate for errors due to internal noise. The common pins provide a quality, low impedance connection to the printed circuit board (PCB) ground. The package paddle, which is internally connected to the COMR pins, should also be grounded to the PCB to reduce thermal impedance from the die to the PCB.

The logarithmic function is approximated in a piecewise fashion by six cascaded gain stages. For a more comprehensive explanation of the logarithm approximation, refer to the AD8307 data sheet.

The cells have a nominal voltage gain of 9 dB each, with a 3 dB bandwidth of 10.5 GHz. Using precision biasing, the gain is stabilized over temperature and supply variations. The overall dc gain is high because of the cascaded nature of the gain stages. An offset compensation loop is included to correct for offsets within the cascaded cells. At the output of each gain stage, a square-law detector cell is used to rectify the signal.

The RF signal voltages are converted to a fluctuating differential current, having an average value that increases with signal level. Along with the six gain stages and detector cells, an additional detector is included at the input of each measurement channel, providing a 54 dB dynamic range in total. After the detector currents are summed and filtered, the following function is formed at the summing node:

$$I_D \times \log_{10}(V_{IN}/V_{INTERCEPT}) \quad (1)$$

where:

I_D is the internally set detector current.

V_{IN} is the input signal voltage.

$V_{INTERCEPT}$ is the intercept voltage (that is, when $V_{IN} = V_{INTERCEPT}$, the output voltage would be 0 V, if it were capable of going to 0 V).

Downloaded from Arrow.com.

USING THE ADL5519

BASIC CONNECTIONS

The ADL5519 is specified for operation up to 10 GHz. As a result, low impedance supply pins with adequate isolation between functions are essential. A power supply voltage between 3.3 V and 5.5 V should be applied to VPSA, VPSB, and VPSR. Power supply decoupling capacitors of 100 pF and 0.1 µF should be connected close to these power supply pins (see Figure 53).

The paddle of the LFCSP package is internally connected to COMR. For optimum thermal and electrical performance, the paddle should be soldered to a low impedance ground plane.

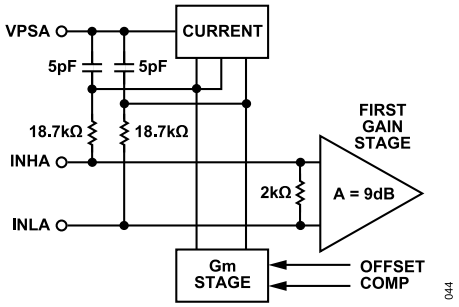

Figure 52. Single-Channel Input Interface

INPUT SIGNAL COUPLING

The ADL5519 inputs are differential but were characterized and are generally used single ended. When using the ADL5519 in single-ended mode, the INHA, INHB pins must be ac-coupled, and INLA, INLB must be ac-coupled to ground. Suggested coupling capacitors are 47 nF, ceramic 0402-style capacitors for input frequencies of 1 MHz to 10 GHz. The coupling capacitors should be mounted close to the INHA, INHB and INLA, INLB pins. The coupling capacitor values can be increased to lower the input stage high-pass cutoff frequency.

The high-pass corner is set by the input coupling capacitors and the internal 10 pF high-pass capacitor. The dc voltage on INHA, INHB and INLA, INLB is approximately one diode voltage drop below the supply voltage.

Although the input can be reactively matched, in general this reactive matching is not necessary. An external 52.3 Ω shunt resistor (connected on the signal side of the input coupling capacitors, as shown in Figure 53) combines with the relatively high input impedance to give an adequate broadband match of 50 Ω.

The coupling time constant, 50 × C_C/2, forms a high-pass corner with a 3 dB attenuation at f_{HP} = 1/(2π × 50 × C_C), where C1 = C2 = C3 = C4 = C_C. Using the typical value of 47 nF, this high-pass corner is ~68 kHz. In high frequency applications, f_{HP} should be as large as possible to minimize the coupling of unwanted low frequency signals. In low frequency applications, a simple RC network forming a low-pass filter should be added at the input for similar reasons. This low-pass filter should generally be placed at the generator side of the coupling capacitors, thereby lowering the required capacitance value for a given high-pass corner frequency.

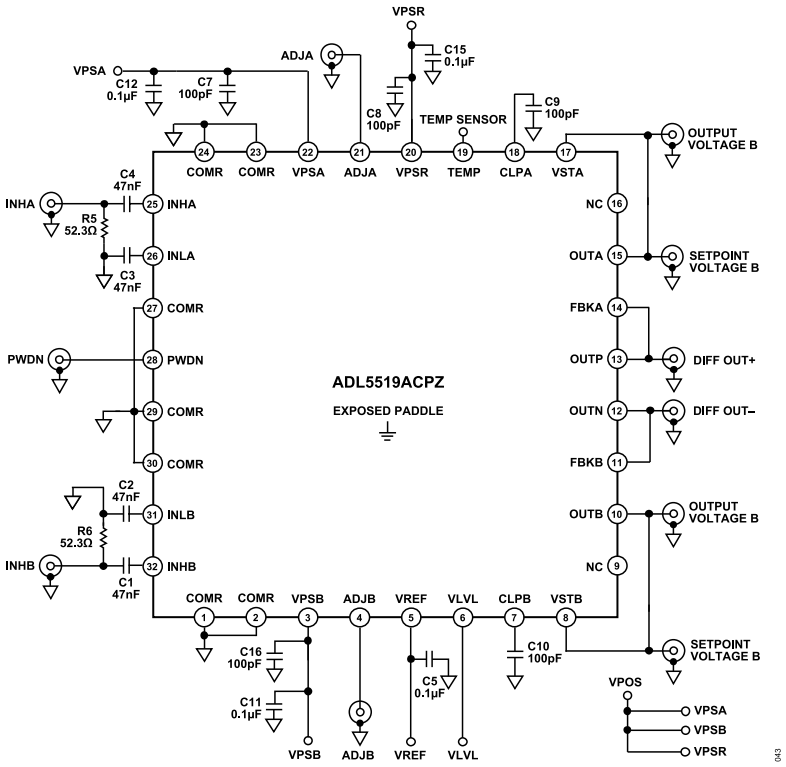

Figure 53. Basic Connections for Operation in Measurement Mode

Downloaded from Arrow.com.

USING THE ADL5519

TEMPERATURE SENSOR INTERFACE

The ADL5519 provides a temperature sensor output capable of driving 4 mA. The temperature scaling factor of the output voltage is ~4.48 mV/°C. The typical absolute voltage at 27°C is approximately 1.36 V.

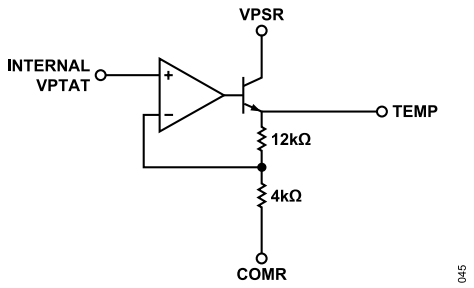

Figure 54. TEMP Interface Simplified Schematic

VREF INTERFACE

The VREF pin provides a highly stable voltage reference. The voltage on the VREF pin is 1.15 V, which is capable of driving 3 mA. An equivalent internal resistance is connected from VREF to COMR for 3 mA sink capability.

POWER-DOWN INTERFACE

The operating and stand-by currents for the ADL5519 at 27°C are approximately 60 mA and less than 1 mA, respectively. To completely power down the ADL5519, the PWDN and ADJA, ADJB pins must be pulled within 200 mV of the supply voltage. When powered on, the output reaches to within 0.1 dB of its steady-state value in about 0.5 µs; the reference voltage is available to full accuracy in a much shorter time.

This wake-up response time varies, depending on the input coupling network and the capacitance at the CLPA, CLPB pins. PWDN disables the OUTP, OUTN, VREF, and TEMP pins. The power-down pin, PWDN, is a high impedance pin.

The ADJA and ADJB pins, when pulled within 200 mV of the supply voltage, disable OUTA and OUTB, respectively.

SETPOINT INTERFACE—VSTA, VSTB

The VSTA, VSTB inputs are high impedance (40 kΩ) pins that drive inputs of internal op amps. The V_{SET} voltage appears across the internal 1.5 kΩ resistor to generate a current, I_{SET}. When a portion of V_{OUT} is applied to VSTA, VSTB, the feedback loop forces

$$-I_D \times \log_{10}(V_{IN}/V_{INTERCEPT}) = I_{SET} \quad (2)$$

If $V_{SET} = V_{OUT}/2x$, then $I_{SET} = V_{OUT}/(2x \times 1.5\ k\Omega)$.

The result is

$$V_{OUT} = (-I_D \times 1.5\ k\Omega \times 2x) \times \log_{10}(V_{IN}/V_{INTERCEPT}) \quad (3)$$

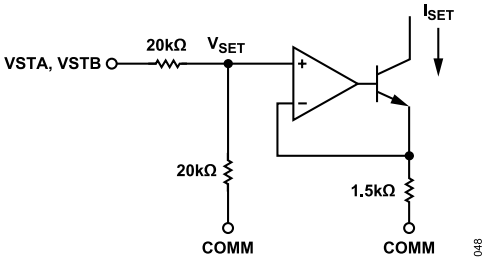

Figure 55. VSTA, VSTB Interface Simplified Schematic

The slope is given by $-I_D \times 2x \times 1.5\ k\Omega = -22$ mV/dB × x. For example, if a resistor divider to ground is used to generate a V_{SET} voltage of $V_{OUT}/2$, then x = 2. The slope is set to −880 V/ decade or −44 mV/dB. See the Altering the Slope section for additional information.

OUTPUT INTERFACE—OUTA, OUTB

The OUTA, OUTB pins are driven by a push-pull output stage. The rise time of the output is limited mainly by the slew on CLPA, CLPB. The fall time is an RC-limited slew given by the load capacitance and the pull-down resistance at OUTA, OUTB. There is an internal pull-down resistor of 1.6 kΩ The resistive load at OUTA, OUTB can be placed in parallel with the internal pull-down resistor to reduce the discharge time. OUTA, OUTB can source greater than 10 mA.

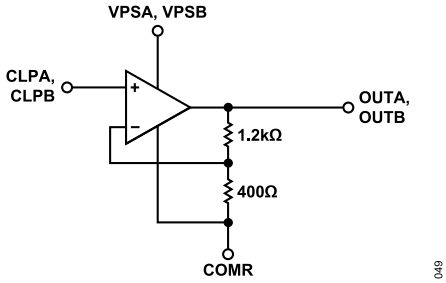

Figure 56. OUTA, OUTB Interface Simplified Schematic

DIFFERENCE OUTPUT—OUTP, OUTN

The ADL5519 incorporates two operational amplifiers with rail-to-rail output capability to provide a channel difference output.

As in the case of the output drivers for OUTA, OUTB, the output stages have the capability of driving greater than 10 mA. OUTA and OUTB are internally connected through 1 kΩ resistors to the inputs of each op amp. The VLVL pin is connected to the positive terminal of both op amps through 1 kΩ resistors to provide level shifting. The negative feedback terminal is also made available through a 1 kΩ resistor. The input impedance of VLVL is 1 kΩ, and the input impedance of FBKA, FBKB is 1 kΩ. See Figure 57 for the connections of these pins.

Downloaded from Arrow.com.

USING THE ADL5519

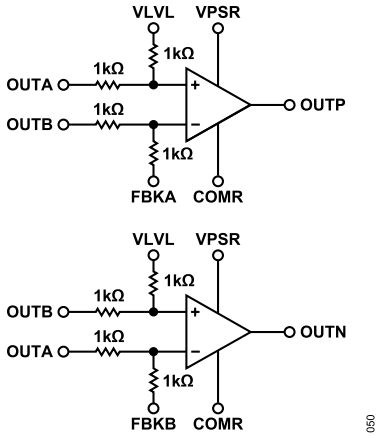

Figure 57. OUTP, OUTN Interface Simplified Schematic

If OUTP is connected to FBKA, OUTP is given as

$$OUTP = OUTA - OUTB + VLVL \quad (4)$$

If OUTN is connected to FBKB, OUTN is given as

$$OUTN = OUTB - OUTA + VLVL \quad (5)$$

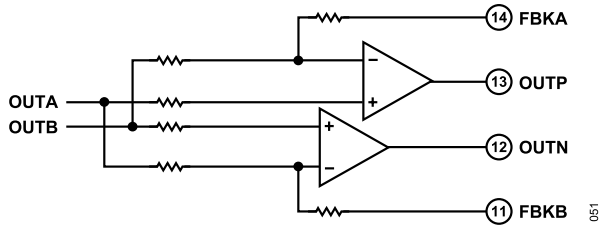

Figure 58. Op Amp Connections (All Resistors Are 1 kΩ ± 20%)

In this configuration, all four measurements, OUTA, OUTB, OUTP, and OUTN, are available simultaneously. A differential output can be taken from OUTP − OUTN, and VLVL can be used to adjust the common-mode level for an ADC connection. This is convenient not only for driving a differential ADC but also for removing any temperature variation on VLVL.

DESCRIPTION OF CHARACTERIZATION

The general hardware configuration used for most of the ADL5519 characterization is shown in Figure 59. The signal sources used in this example are the E8251A from Agilent Technologies. The INHA, INHB input pins are driven by Agilent signal sources, and the output voltages are measured using a voltmeter.

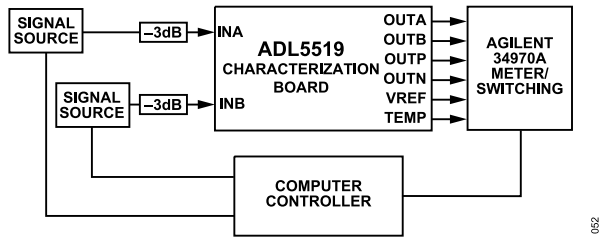

Figure 59. General Characterization Configuration

BASIS FOR ERROR CALCULATIONS

The input power and output voltage are used to calculate the slope and intercept values. The slope and intercept are calculated using linear regression over the input range from −40 dBm to −10 dBm. The slope and intercept terms are used to generate an ideal line. The error is the difference in measured output voltage compared to the ideal output line. This is a measure of the linearity of the device. Refer to the Device Calibration section for more information on calculating slope, intercept, and error.

Error from the linear response to the CW waveform is not a measure of absolute accuracy because it is calculated using the slope and intercept of each device. However, error verifies the linearity and the effects of modulation on device response. Similarly, at temperature extremes, error represents the output voltage variations from the 25°C ideal line performance. Data presented in the graphs is the typical error distribution observed during characterization of the ADL5519.

Pulse response of the ADL5519 is 6 ns/8 ns rise/fall times. For the fastest response time, the capacitance on OUTA, OUTB should be kept to a minimum. Any capacitance on the output pins should be counterbalanced with an equal capacitance on the CLPA, CLPB pins to prevent ringing on the output.

DEVICE CALIBRATION

The measured transfer function of the ADL5519 at 2.2 GHz is shown in Figure 60. The figure shows plots of both output voltage vs. input power and calculated error vs. input power. As the input power varies from −60 dBm to −5 dBm, the output voltage varies from 1.7 V to about 0.5 V.

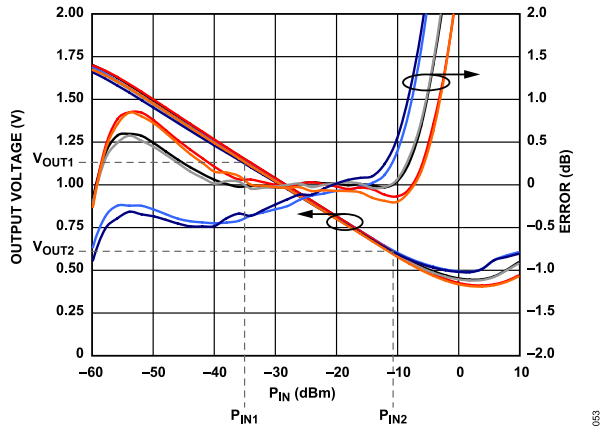

Figure 60. Transfer Function at 2.2 GHz with Calibration Points

Because slope and intercept vary from device to device, board-level calibration must be performed to achieve the highest accuracy. The equation for output voltage can be written as

$$V_{OUT} = Slope \times (P_{IN} - Intercept) \quad (6)$$

where:

Downloaded from Arrow.com.

USING THE ADL5519

Slope is the change in output voltage divided by the change in input power, P_{IN}, expressed in decibels (dB).
Intercept is the calculated power at which the output voltage would be 0 V. Note that an output voltage of 0 V can never be achieved.

In general, calibration is performed by applying two known signal levels to the ADL5519 input and measuring the corresponding output voltages. The calibration points are generally chosen to be within the linear-in-dB operating range of the device (see the Specifications section for more details).

Calculation of the slope and intercept is accomplished using the following equations:

$$Slope = (V_{OUT1} - V_{OUT2})/(P_{IN1} - P_{IN2}) \quad (7)$$

$$Intercept = P_{IN1} - (V_{OUT1}/Slope) \quad (8)$$

Once slope and intercept are calculated, an equation can be written that calculates the input power based on the output voltage of the detector.

$$P_{IN}\,(Unknown) = (V_{OUT1(MEASURED)}/Slope) + Intercept \quad (9)$$

The log conformance error of the calculated power is given by

$$Error\,(\text{dB}) = (V_{OUT(MEASURED)} - V_{OUT(IDEAL)})/Slope \quad (10)$$

Figure 60 includes a plot of the error at 25°C, the temperature at which the log amp is calibrated. Note that the error is not 0 dB over the full dynamic range. This is because the log amp does not perfectly follow the ideal V_{OUT} vs. P_{IN} equation, even within its operating region. The error at the calibration points of −35 dBm and −11 dBm is equal to 0 dB, by definition.

Figure 60 also shows error plots for the output voltage at −40°C and +85°C. These error plots are calculated using the slope and intercept at 25°C. This is consistent with calibration in a mass-production environment, where calibration over temperature is not practical.

ADJUSTING ACCURACY THROUGH CHOICE OF CALIBRATION POINTS

In some applications, very high accuracy is required at one power level or over a reduced input range. For example, in a wireless transmitter, the accuracy of the high power amplifier (HPA) is most critical at or close to full power.

In applications like AGC control loops, good linearity and temperature performance are necessary over a large input power range. The temperature crossover point (the power level at which there is no drift in performance from −40°C to −80°C) can be shifted from high power levels to midpower levels using the method shown in the Temperature Compensation Adjustment section. This shift equalizes the temperature performance over the complete power range. The linearity of the transfer function can be equalized by changing the calibration points.

Figure 61 demonstrates this equalization by changing the calibration points used in Figure 60 to −46 dBm and −22 dBm. This adjustment of the calibration points changes the linearity to greater than ±0.25 dB over a 50 dB dynamic range at the expense of a slight decrease in linearity at power levels between −40 dBm and −25 dBm.

Calibration points should be chosen to suit the application at hand. In general, however, do not choose calibration points in the nonlinear portion of the log amp transfer function (greater than −10 dBm or less than −40 dBm, in this example).

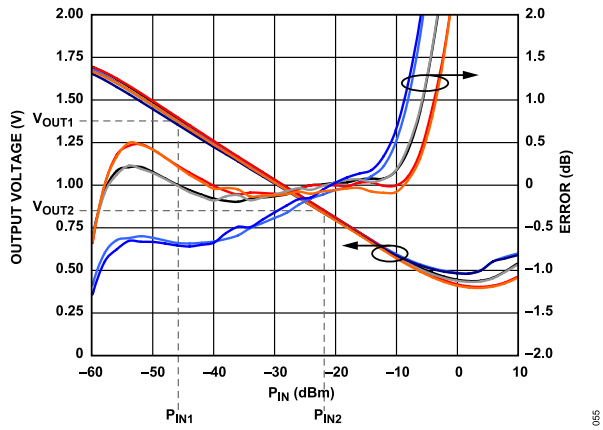

Figure 61. Dynamic Range Extension by Choosing Calibration Points That Are Close to the End of the Linear Range, 2.14 GHz

Another way of presenting the error function of a log amp detector is shown in Figure 62. In this example, the decibel (dB) error at hot and cold temperatures is calculated with respect to the output voltage at ambient. This is a key difference when compared to the previous plots, in which all errors have been calculated with respect to the ideal transfer function at ambient.

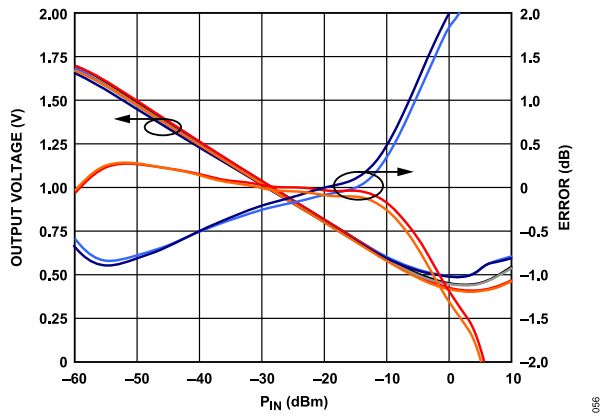

Figure 62. Error vs. Temperature with Respect to Output Voltage at 25°C, 2.14 GHz (Removes Transfer Function Nonlinearities at 25°C)

With this alternative technique, the error at ambient becomes, by definition, equal to 0 (see Figure 62). This value would be valid if the device transfer function perfectly followed the ideal of the V_{OUT} = Slope × (P_{IN} − Intercept) equation.

However, because an rms amp, in practice, never perfectly follows this equation (especially outside of its linear operating range), this

Downloaded from Arrow.com.

USING THE ADL5519

plot tends to artificially improve linearity and extend the dynamic range, unless enough calibration points are taken to remove the error.

Figure 62 is a useful tool for estimating temperature drift at a particular power level with respect to the (nonideal) output voltage at ambient.

TEMPERATURE COMPENSATION ADJUSTMENT

The ADL5519 temperature performance has been optimized to ensure that the output voltage has minimum temperature drift at −10 dBm input power. The applied voltage for the ADJA and ADJB pins for some specified frequencies is listed in Table 4. However, not all frequencies are represented in Table 4, and experimentation may be required.

Compensating the device for temperature drift by using ADJA, ADJB allows for great flexibility. To determine the optimal adjust voltage, sweep ADJA, ADJB at ambient and at the desired temperature extremes for a couple of power levels while monitoring the output voltage. The point of intersection determines the best adjust voltage. Some additional minor tweaking may be required to achieve the highest level of temperature stability. With appropriate values, a temperature drift error of typically ±0.5 dB over the entire rated temperature range can be achieved.

Table 4. Recommended ADJA, ADJB Voltage Levels

Frequency	Recommended ADJA, ADJB Voltage (V)
100 MHz	0.65, 0.7
900 MHz	0.6, 0.65
1.9 GHz	0.5, 0.55
2.2 GHz	0.48, 0.6
3.6 GHz	0.35, 0.42
5.8 GHz	0.58, 0.7
8 GHz	0.72, 0.82

Proprietary techniques are used to compensate for the temperature drift. The absolute value of compensation varies with frequency and circuit board material.

ADJA, ADJB are high impedance pins. The applied ADJA, ADJB voltages can be supplied from VREF through a resistor divider.

Figure 63 shows a simplified schematic representation of the ADJA, ADJB interface.

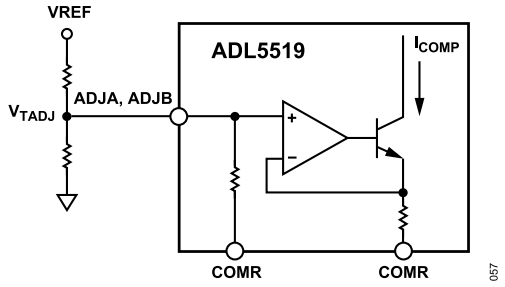

Figure 63. ADJA, ADJB Interface Simplified Schematic

ALTERING THE SLOPE

As discussed in the Setpoint Interface—VSTA, VSTB section, the slope can readily be increased by scaling the amount of output voltage at OUTA, OUTB that is fed back to the setpoint interface, VSTA, VSTB. When the full signal from OUTA, OUTB is applied to VSTA, VSTB, the slope has a nominal value of −22 mV/dB. This value can be increased by including a voltage divider between the OUTA, OUTB and VSTA, VSTB pins, as shown in Figure 64.

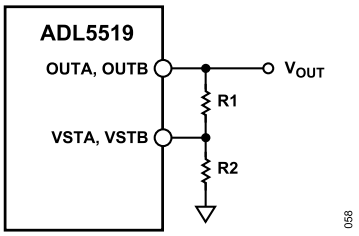

Figure 64. External Network to Raise Slope

The approximate input resistance for VSTA, VSTB is 40 kΩ. Scaling resistor values should be carefully selected to minimize errors. Keep in mind that these resistors also load the output pins and reduce the load-driving capabilities.

Equation 11 can be used to calculate the resistor values.

$$R1 = R2'\left(\frac{S_D}{-22} - 1\right) \quad (11)$$

where:
S_D is the desired slope, expressed in millivolts/decibels (mV/dB).
$R2'$ is the value of R2 in parallel with 40 kΩ.

For example, using R1 = 1.65 kΩ and R2 = 1.69 kΩ (R2' = 1.62 kΩ), the nominal slope is increased to −44 mV/dB.

When the slope is increased, the loop capacitor, CLPA, CLPB, may need to be raised to ensure stability and to preserve a chosen averaging time. The slope can be lowered by placing a voltage divider after the output pin, following standard practices.

CHANNEL ISOLATION

Isolation must be considered when using both channels of the ADL5519 at the same time. The two isolation requirements that should be considered are the isolation from one RF channel input to the other RF channel input and the isolation from one RF channel

Downloaded from Arrow.com.

USING THE ADL5519

input to the other channel output. When using both channels of the ADL5519, care should be taken in the layout to isolate the RF inputs, INHA and INHB, from each other. Coupling on the PC board affects both types of isolation.

In most applications, the designer has the ability to adjust the power going into the ADL5519 through the use of temperature-stable couplers and accurate temperature-stable attenuators of different values. When isolation is a concern, it is useful to adjust the input power so the lowest expected detectable power is not far from the lowest detectable power of the ADL5519 at the frequency of operation.

The lowest detectable power point of the ADL5519 has little variation from part to part. This equalizes the signals on both channels at their lowest possible power level, which reduces the overall isolation requirements and possibly adds attenuators to the RF inputs of the device, reducing the RF channel input isolation requirements.

Measuring the RF channel input to the other RF channel input isolation is straightforward and is done by measuring the loss on a network analyzer from one input to the other input. The outcome is shown in the Specifications section of the data sheet. Note that adding an attenuator in series with the RF signal increases the channel input-to-input isolation by the value of the attenuator.

The isolation between one RF channel input and the other channel output is a little more complicated. The easiest approach (which was used in this datasheet) to measuring this isolation is to have one channel set to the lowest power level it is expected to have on its input (approximately −50 dBm in this data sheet) and then increasing the power level on the other channel input until the output of the low power channel changes by 22 mV. Because −50 dBm is in the linear region of the detector, 22 mV equates to a 1 dB change in the output.

If the inputs to both RF channels are at the same frequency, the isolation also depends on the phase shift between the RF signals put into the ADL5519. This relationship can be demonstrated by placing a high power signal on one RF channel input and a low power signal slightly offset in frequency to the other RF channel.

If the output of the low power channel is observed with an oscilloscope, it has a ripple that looks similar to a full-wave rectified sine wave with a frequency equal to the frequency difference between the two channels, that is, a beat tone. The magnitude of the ripple reflects the isolation at a specific phase offset (note that two signals of slightly different frequencies act like two signals with a constantly changing phase), and the frequency of that ripple is directly related to the frequency offset.

The data shown in the Specifications section assumes worst-case amplitude and phase offset. If the RF signals on Channel A and Channel B are at significantly different frequencies, the input-to-output isolation increases, depending on the capacitors placed on CLPA, CLPB and the frequency offset of the two signals, due to the response roll-off within the ADL5519.

OUTPUT FILTERING

Accurate power detection for signals with RF bursts is achieved when the ADL5519 is able to respond quickly to the change in RF power. For applications in which maximum video bandwidth and, consequently, fast rise time are desired, it is essential that the CLPA, CLPB pins have very little capacitance on them (some capacitance reduces the ringing).

The nominal output video bandwidth of 10 MHz can be reduced by connecting a ground-referenced capacitor (C_{FLT}) to the CLPA, CLPB pins, as shown in Figure 65. This is generally done to reduce output ripple (at twice the input frequency for a symmetric input waveform, such as a sinusoidal signal).

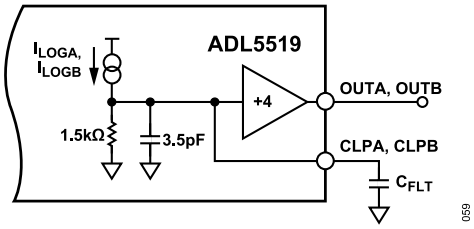

Figure 65. Lowering the Post Demodulation Bandwidth

C_{FLT} is selected using the following equation:

$$C_{FLT} = \frac{1}{(\pi \times 1.5\ \text{k}\Omega \times Video\ Bandwith)} - 3.5\ \text{pF} \quad (12)$$

The video bandwidth should typically be set to a frequency less than or equal to approximately 1/10 the minimum input frequency. There are no problems with putting large capacitor values on the CLPA, CLPB pins. These large capacitor values ensure that the output ripple of the demodulated log output, which is at twice the input frequency, is well filtered. Signals with modulation may need additional filtering (a larger C_{FLT} capacitance) to remove modulation bleedthrough.

PACKAGE CONSIDERATIONS

The ADL5519 uses a compact, 32-lead LFCSP. A large exposed paddle on the bottom of the device provides both a thermal benefit and a low inductance path to ground for the circuit. To make proper use of this packaging feature, the PCB RF/dc common-ground reference needs to make contact with the paddle with as many vias as possible to lower inductance and thermal impedance.

OPERATION ABOVE 8 GHZ

The ADL5519 is specified for operation up to 8 GHz, but it provides useful measurement accuracy over a reduced dynamic range of up to 10 GHz. Figure 66 shows the performance of the ADL5519 over temperature for a input frequency of 10 GHz. This high frequency performance is achieved using the configuration shown in Figure 53. The dynamic range shown is reduced from the typical device performance, but the ADL5519 can provide 30 dB of measurement range with less than 3 dB of linearity error.

Downloaded from Arrow.com.

USING THE ADL5519

Implementing an impedance match for frequencies greater than 8 GHz can improve the sensitivity of the ADL5519 and its measurement range.

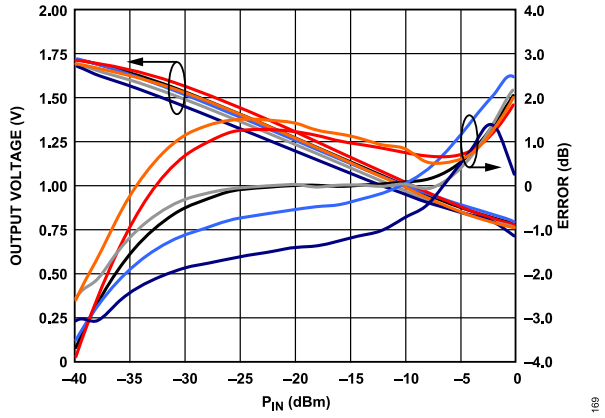

Figure 66. V_{OUT} and Log Conformance vs. Input Amplitude at 10 GHz, Over Temperature, ADJA, ADJB = 1.8 V, 1.8 V

Downloaded from Arrow.com.

APPLICATIONS INFORMATION

MEASUREMENT MODE

The ADL5519 is placed in measurement mode by connecting OUTA, OUTB to VSTA, VSTB, respectively. The part has an offset voltage, a negative slope, and a V_{OUTA}, V_{OUTB} measurement intercept at the high end of its input signal range.

The output voltage vs. input signal voltage of the ADL5519 is linear-in-dB over a multidecade range. The equation for this function is of the following form:

$$V_{OUT} = x \times V_{SLOPE/DEC} \times \log_{10}(V_{IN}/V_{INTERCEPT}) = x \times V_{SLOPE/dB} \times 20 \times \log_{10}(V_{IN}/V_{INTERCEPT}) \quad (13)$$

where:

x is the feedback factor in $V_{SET} = V_{OUT}/x$.

$V_{SLOPE/DEC}$ is nominally −440 mV/decade or −22 mV/dB.

$V_{INTERCEPT}$ is the x-axis intercept of the linear-in-dB portion of the V_{OUT} vs. V_{IN} curve.

$V_{INTERCEPT}$ is 2 dBV for a sinusoidal input signal.

An offset voltage, V_{OFFSET}, of 0.45 V is internally added to the detector signal so that the minimum value for V_{OUT} is $x \times V_{OFFSET}$. If x = 1, the minimum V_{OUT} value is 0.45 V.

The slope is very stable vs. process and temperature variation. When Base-10 logarithms are used, $V_{SLOPE/DEC}$ represents the volts/decade. A decade corresponds to 20 dB; $V_{SLOPE/DEC}/20 = V_{SLOPE/dB}$ represents the slope in V/dB.

As noted in Equation 13, the V_{OUT} voltage has a negative slope. This is also the correct slope polarity to control the gain of many VGAs in a negative feedback configuration. Because both the slope and intercept vary slightly with frequency, see the Specifications section for application-specific values for slope and intercept.

Although demodulating log amps respond to input signal voltage and not input signal power, it is customary to discuss the amplitude of high frequency signals in terms of power. In this case, the characteristic impedance of the system, Z_0, must be known to convert voltages to their corresponding power levels. The following equations are used to perform this conversion:

$$P\,(\text{dBm}) = 10 \times \log_{10}(V_{rms}^2/(Z_0 \times 1\text{ mW})) \quad (14)$$

$$P\,(\text{dBV}) = 20 \times \log_{10}(V_{rms}/1\ V_{rms}) \quad (15)$$

$$P\,(\text{dBm}) = P\,(\text{dBV}) - 10 \times \log_{10}(Z_0 \times 1\text{ mW}/1\ V_{rms}^2) \quad (16)$$

For example, $P_{INTERCEPT}$, for a sinusoidal input signal expressed in terms of dBm (decibels referred to 1 mW), in a 50 Ω system is

$$P_{INTERCEPT}\,(\text{dBm}) = P_{INTERCEPT}\,(\text{dBV}) - 10 \times \log_{10}(Z_0 \times 1\text{ mW}/1\ V_{rms}^2) = 2\text{ dBV} - 10 \times \log_{10}(50 \times 10^{-3}) = 15\text{ dBm}$$

For a square wave input signal in a 200 Ω system

$$P_{INTERCEPT}\,(\text{dBm}) = -1\text{ dBV} - 10 \times \log_{10}[(200\ \Omega \times 1\text{ mW}/1V_{rms}^2)] = +6\text{ dBm}$$

More information about the intercept variation dependence upon waveform can be found in the AD8313 and AD8307 data sheets.

As the input signals to Channel A and Channel B are swept over their nominal input dynamic range of −5 dBm to −55 dBm, the output swings from 0.5 V to 1.6 V. The voltages of OUTA, OUTB are also internally applied to a difference amplifier with a gain of 1. When the input power is swept, OUTP swings from approximately 0.5 V to 1.75 V, and OUTN swings from 1.75 V to 0.5 V. The VLVL pin sets the common-mode voltage for OUTP, OUTN. An output common-mode voltage of ≤1.15 V can be set using a resistor divider between the VREF and VLVL pins. Measurement of large differences between INHA, INHB can be affected by on-chip signal leakage.

CONTROLLER MODE

In addition to being a measurement device, the ADL5519 can also be configured to set and control signal levels. Each of the two log detectors can be separately configured to set and control the output power level of a VGA or variable voltage attenuator (VVA). See the Controller Mode section of the AD8317 datasheet for more information on running a single channel in controller mode.

Alternatively, the two log detectors can be configured to measure and control the gain of an amplifier or signal chain. The channel difference outputs can be used to control a feedback loop to the ADL5519 RF inputs. A capacitor connected between FBKA and OUTP forms an integrator, keeping in mind that the on-chip 1 kΩ feedback resistor forms a 0. (The value of the on-chip resistors can vary as much as ±20% with manufacturing process variation.) If Channel A is driven and Channel B has a feedback loop from OUTP through a VGA, OUTP integrates to a voltage value such that

$$OUTB = (OUTA + VLVL)/2 \quad (17)$$

The output value from OUTN may or may not be useful. It is given by

$$OUTN = 0\text{ V} \quad (18)$$

for VLVL < OUTA/3.

Otherwise,

$$OUTN = (3 \times VLVL - OUTA)/2 \quad (19)$$

If VLVL is connected to the OUTA pin, OUTB is forced to equal OUTA through the feedback loop. This flexibility provides the capability to measure one channel operating at a given power level and frequency while forcing the other channel to a desired power level at another frequency. The voltages applied to the ADJA, ADJB pins should be selected carefully to minimize temperature drift of the output voltage. The temperature drift is the statistical sum of the drift from Channel A and Channel B. As stated previously, VLVL can be used to force the subordinate channel to operate at a different power from the other channel.

Downloaded from Arrow.com.

APPLICATIONS INFORMATION

If the two channels are forced to operate at different power levels, some static offset occurs due to voltage drops across metal wiring in the IC.

If an inversion is necessary in the feedback loop, OUTN can be used as the integrator by placing a capacitor between OUTN, OUTP. This changes the output equation for OUTB and OUTP to

$$OUTB = 2 \times OUTA - VLVL \quad (20)$$

For VLVL < OUTA/2,

$$OUTN = 0\ V \quad (21)$$

Otherwise,

$$OUTN = 2 \times VLVL - OUTA \quad (22)$$

Equation 17 to Equation 22 are valid when Channel A is driven and Channel B is a subordinate through a feedback loop. When Channel B is driven and Channel A is a subordinate, these equations can be altered by changing OUTB to OUTA and OUTN to OUTP.

AUTOMATIC GAIN CONTROL

Figure 67 shows how the ADL5519 can be connected to provide automatic gain control to an amplifier or signal chain. Additional pins are omitted for clarity. In this configuration, both detectors are connected in measurement mode with appropriate filtering being used on CLPA, CLPB to provide adequate filtering of the demodulated log output. OUTA, however, is also connected to the VLVL pin of the on-board difference amplifier. In addition, the OUTP output of the difference amplifier drives a variable gain element (either VVA or VGA) and is connected back to the FBKA input via a capacitor so that it is operating as an integrator.

Assume that OUTA is much bigger than OUTB. Because OUTA also drives VLVL, this voltage is also present on the noninverting input of the op amp driving OUTP. This results in a current flow from OUTP through the integrating capacitor into the FBKA input. This results in the voltage on OUTP increasing. If the gain control transfer function of the VGA/VVA is positive, this increases the gain, which in turn increases the input signal to INHA. The output voltage on the integrator continues to increase until the power on the two input channels is equal, resulting in a signal chain gain of unity.

If a gain other than 0 dB is required, an attenuator can be used in one of the RF paths, as shown in Figure 67. Alternatively, power splitters or directional couplers of different coupling factors can be used. Another convenient option is to apply a voltage on VLVL other than OUTA. Refer to Equation 18 and the Controller Mode section for more detail.

If the VGA/VVA has a negative gain control sense, the OUTN output of the difference amplifier can be used with the integrating capacitor tied back to FBKB. Alternatively, the inputs could be swapped.

The choice of the integrating capacitor affects the response time of the AGC loop. Small values give a faster response time but may result in instability, whereas larger values reduce the response time. Capacitors that are too large can also cause oscillations due to the capacitive drive capability of the op amp. In automatic gain control, the capacitors on CLPA and CLPB, which perform the filtering of the demodulated log output, must still be used and also affect loop response time.

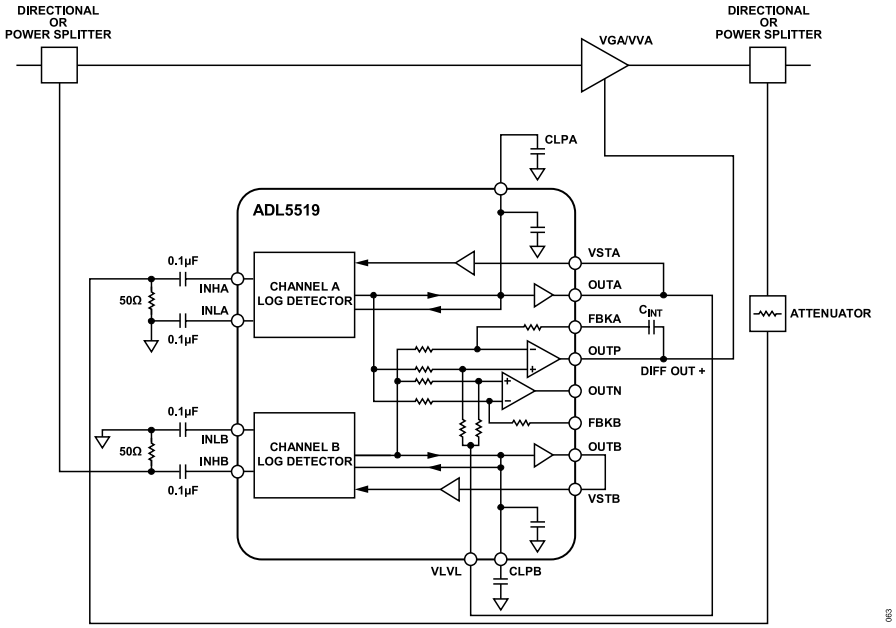

Figure 67. Operation in Controller Mode for Automatic Gain Control

Downloaded from Arrow.com.

APPLICATIONS INFORMATION

GAIN-STABLE TRANSMITTER/RECEIVER

There are many applications for a transmitter or receiver with a highly accurate temperature-stable gain. For example, a multi-carrier, base station high power amplifier (HPA) using digital predistortion can have a power detector and an auxiliary receiver. The power detector and all parts associated with it can be removed if the auxiliary receiver has a highly accurate temperature-stable gain. With a set gain receiver, the ADC on the auxiliary receiver can determine not only the overall power being transmitted but also the power in each carrier for a multicarrier HPA. Without the use of a detector, the auxiliary receiver is very difficult to calibrate accurately over temperature due to the part-to-part variation of the components in the auxiliary receiver.

In controller mode, the ADL5519 can be used to hold the receiver gain constant over a broad input power/temperature range. In this application, the difference outputs are used to hold the receiver gain constant. Figure 69 shows an example of how this can be done.

The RF input is connected to INHB, using a 19 dB coupler, and the down-converted output from the signal chain is connected to INHA, using a 19 dB coupler. A 100 pF capacitor is connected between FBKA and OUTP, forming an integrator. OUTA is connected to VLVL, forcing OUTP to adjust the VGA so that OUTB is equal to OUTA. The circuit gain is set by the difference in the coupling values of the input and output couplers and the differences in path losses to the detector. Because they are operating at different frequencies, the appropriate voltages on the ADJA, ADJB pins must be supplied. ADJA is set to 0.6 V and ADJB is set to 0.65 V to set the −40°C/+85°C crossover point toward the center of the input power range. Using the suggested ADJA value for 80 MHz would put the crossover point at a higher power level.

Figure 68 shows the results of the circuit in Figure 69. The input power is swept from −47 dBm to +8 dBm. The output power is measured, and the gain is calculated at +25°C, −40°C and +85°C. With equal valued couplers used on the input and output, the expected gain is about 0 dB. Due to path loss differences and differences due to using two separate frequencies, the average gain is about 2.5 dB. In this configuration, approximately 50 dB of control range with 0.2 dB drift over temperature is obtained. For an auxiliary receiver, less than 5 dB of variation is expected over temperature. If the power levels are chosen to coincide with the temperature crossover point, approximately 0.1 dB of temperature variation can be expected. Most of the gain change over input power level is caused by performance differences at different frequencies.

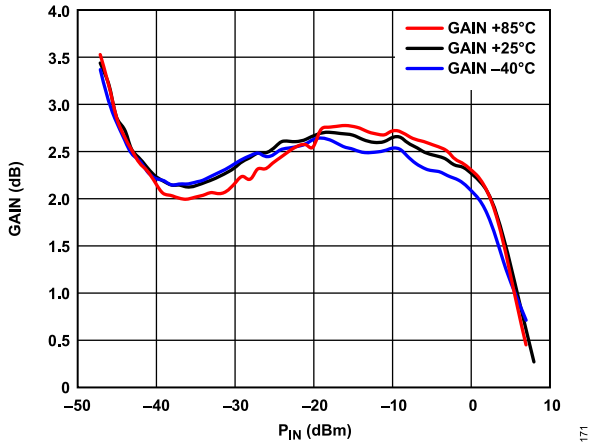

Figure 68. Performance of Gain-Stable Receiver

Downloaded from Arrow.com.

APPLICATIONS INFORMATION

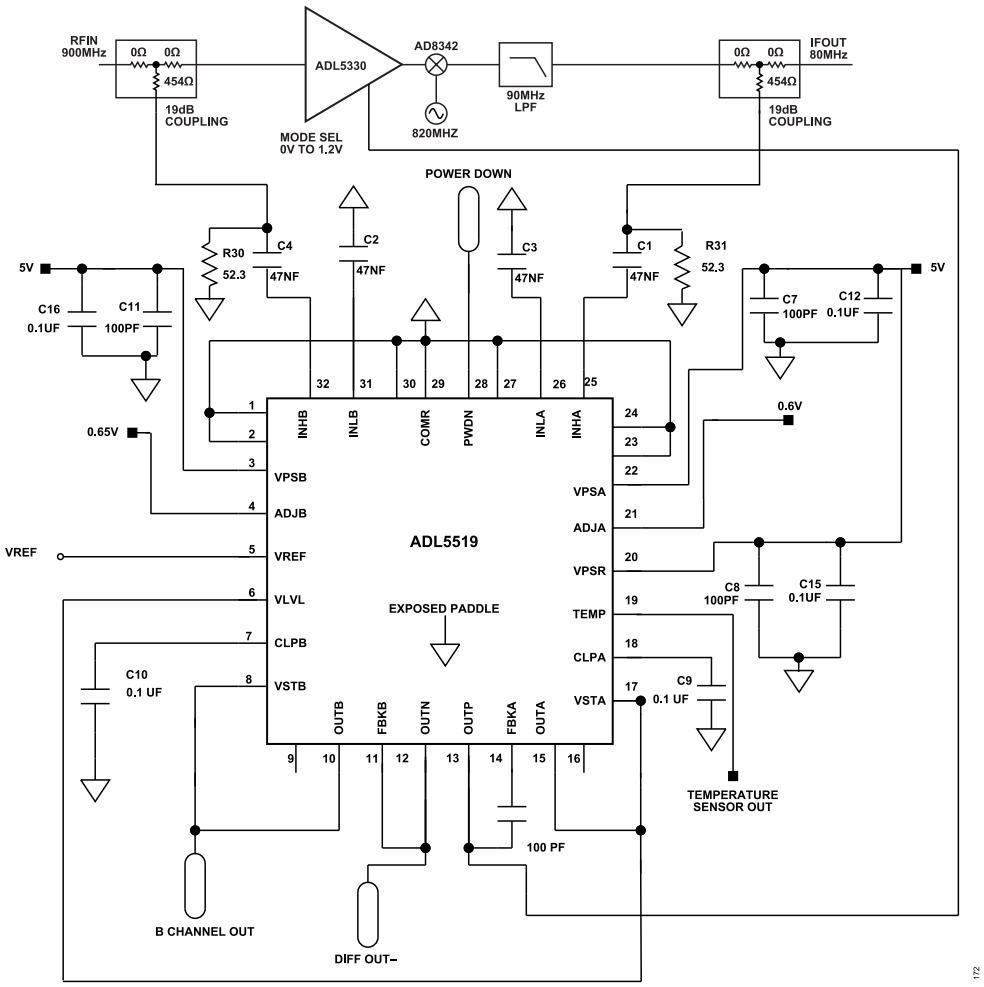

Figure 69. Gain-Stable Receiver Circuit

MEASURING VSWR

Measurement of reflected power in wireless transmitters is a critical auxiliary function that is often overlooked. The power reflected back from an antenna is specified using either the voltage standing wave ratio (VSWR) or the reflection coefficient (also referred to as the return loss). Poor VSWR can cause shadowing in a TV broadcast system because the signal reflected off the antenna reflects again off the power amplifier and is then rebroadcast. In wireless communications systems, shadowing produces multipath-like phenomena. Poor VSWR can degrade transmission quality; the catastrophic VSWR that results from damage to a co-axial cable or to an antenna can, at its worst, destroy the transmitter.

The ADL5519 delivers an output voltage proportional to the log of the input signal over a large dynamic range. A log-responding device offers a key advantage in VSWR measurement applications. To compute gain or reflection loss, the ratio of the two signal powers (either OUTPUT/INPUT or REVERSE/ FORWARD) must be calculated. An analog divider must be used to perform this calculation with a linear-responding diode detector, but only simple subtraction is required when using a log-responding detector (because log(A/B) = log(A) − log(B)).

A dual RF detector has an additional advantage compared to a discrete implementation. There is a natural tendency for two devices (RF detectors, in this case) to behave similarly when they are fabricated on a single piece of silicon, with both devices having similar temperature drift characteristics, for example. At the summing node, this drift cancels to yield a result that is more temperature stable.

In Figure 71, two directional couplers are used, one to measure forward power and one to measure reverse power. Additional attenuation is required before applying these signals to the detectors. The ADL5519 dual detector has a measurement range of 50 dB in each detector. Care must be taken in setting the attenuation levels so the reflection coefficient can be measured over the desired output power range.

The level planning used in this example is graphically depicted in Figure 70. In this example, the expected output power range from the HPA is 30 dB, from 20 dBm to 50 dBm. Over this power range,

Downloaded from Arrow.com.

APPLICATIONS INFORMATION

the ADL5519 can accurately measure reflection coefficients from 0 dB (short, open, or load) to −20 dB.

Each ADL5519 detector has a nominal input range from −5 dBm to −55 dBm. In this example, the maximum forward power of +50 dBm is attenuated to −10 dBm at the detector input (this attenuation is achieved through the combined coupling factor of the directional coupler and the subsequent attenuation). This puts the maximum power at the detector comfortably within its linear operating range. Also, when the HPA is transmitting at its lowest power level of +20 dBm, the detector input power is −40 dBm, which is still within its input operating range.

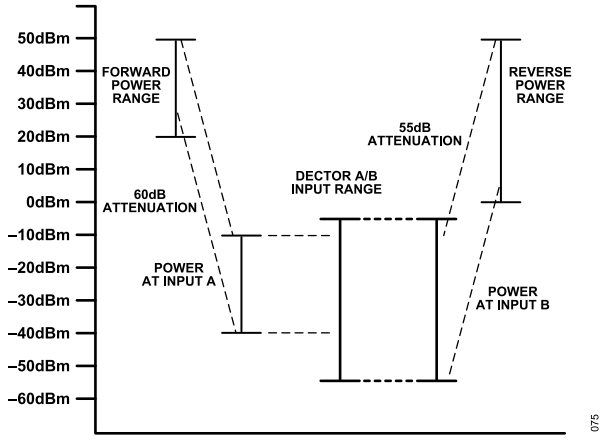

Figure 70. ADL5519 VSWR Level Planning

Careful level planning should be used to match the input power levels in a dual detector and to place these power levels within the linear operating range of the detectors. The power from the reverse path is attenuated by 55 dB, which means that the detector is capable of measuring reflected power up to 0 dB. In most applications, the system is designed to shut down when the reflection coefficient degrades below a certain minimum (for example, 10 dB). Full reflection is allowed when using the ADL5519 because of its large dynamic range. In the case of very little reflection (a return loss of 20 dB) and the HPA is transmitting +20 dBm, the reverse path detector has an input power of −55 dBm.

The application circuit in Figure 71 provides a direct reading of return loss, forward power, and reverse power. If the forward and reverse phase difference (phase angle) is needed to optimize the power delivered to the antenna, the AD8302 should be used. It provides one output that represents the return loss and one output that represents the phase difference between the two signals. However, the AD8302 does not provide the absolute forward or reverse power.

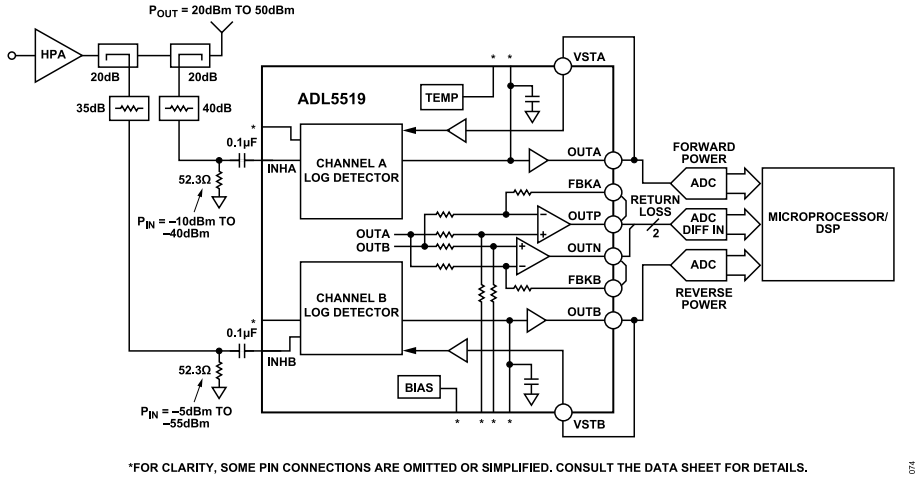

Figure 71. ADL5519 Configuration for Measuring Reflection Coefficients

Downloaded from Arrow.com.

EVALUATION BOARD

CONFIGURATION OPTIONS

Table 5. Evaluation Board (Rev. A) Configuration Options

Component	Description	Default Conditions
VPOS, VPSB, VPSR, GND, GND1, GND3	Supply and Ground Connections. VPOS, VPSB, and VPSR are internally connected. GND, GND1, and GND3 are internally connected.	Not applicable
R0A, R0B, R5, R6, R30, R31, C1, C2, C3, C4	Input Interface. The 52.3 Ω resistors in the R30 and R31 positions combine with the ADL5519 internal input impedance to give a broadband input impedance of about 50 Ω. C1, C2, C3, and C4 are dc-blocking capacitors. A reactive impedance match can be implemented by replacing R5, R6, R30, and R31 with an inductor and by replacing C1, R0A and C4, R0B with appropriately valued capacitors.	R30, R31 = 52.3 Ω (Size 0402), C1 to C4 = 47 nF (Size 0402) R0A, R0B = 0 Ω R5, R6 = open
R14	Temperature Sensor Interface. Temperature sensor output voltage is available at the test point labeled TEMP. R14 can be used as a pull-down resistor.	R14 = open (Size 0603)
R13, R17, R18, R19, R27, R28, R29	Temperature Compensation Interface. A voltage source at ADJA, ADJB can be used to optimize the temperature performance for various input frequencies. The pads for R27/R28 or R27/R29 can be used for voltage dividers from the VREF node to set the ADJA, ADJB voltages at different frequencies. The individual log channels can be disabled by installing 0 Ω resistors at R18 and R19.	R13, R17, R18, R19, R28, R29 = open (Size 0603) R27 = 0 Ω (Size 0603)
R8, R12, R15, R16, R20, R21, R22, R23, C13, C14	Output Interface, Measurement Mode. In measurement mode, a portion of the output voltage is fed back to VSTA, VSTB via R8, R12. The magnitude of the slope of the OUTA, OUTB output voltage response can be increased by reducing the portion of V_{OUTA}, V_{OUTB} that is fed back to VSTA, VSTB. The slope can be decreased by implementing a voltage divider by using R20 and R16 or R21 and R15. R20 and R21 can also be used as a back-terminating resistor or as part of a single-pole, low-pass filter.	R8, R12 = 0 Ω (Size 0603) R15, R16, R22, R23 = open (Size 0603) C13, C14 = open (Size 0603) R20, R21 = 200 Ω (Size 0603)
R8, R12, R22, R23	Output Interface, Controller Mode. In this mode, the 0 Ω resistors must be removed, leaving R8 and R12 open. In controller mode, the ADL5519 can control the gain of an external component. A setpoint voltage is applied to VSTA, VSTB, the value of which corresponds to the desired RF input signal level applied to the corresponding ADL5519 RF input. A sample of the RF output signal from this variable-gain component is selected, typically via a directional coupler, and applied to ADL5519 RF input. The voltage at OUTA, OUTB is applied to the gain control of the variable gain element. A control voltage is applied to VSTA, VSTB. The magnitude of the control voltage can optionally be attenuated via the voltage divider comprising R8, R12 and R22, R23; or a capacitor can be installed in the R22, R23 position to form a low-pass filter along with R8, R12.	R8, R12, R22, R23 = open (Size 0603)
R3, R4, R11, R24, R25, R26, C7, C8, C11, C12, C15, C16	Power Supply Decoupling. The nominal supply decoupling consists of a 100 pF filter capacitor placed physically close to the ADL5519 and a 0.1 µF capacitor placed nearer to each power supply input pin.	R3, R4, R11, R24, R25, R26 = 0 Ω (Size 0603) C7, C8, C11 = 100 pF (Size 0603) C12, C15, C16 = 0.1 µF (Size 0603)
R1, R2, R9, R10	Output Interface, Difference. R9 and R10 can be replaced with a capacitor to form an integrator for constant gain controller mode.	R1, R2, R9, R10 = 0 Ω (Size 0603)
C9, C10	Filter Capacitor. The low-pass corner frequency of the circuit that drives OUTA, OUTB can be lowered by placing a capacitor between CLPA, CLPB and ground. Increasing this capacitor increases the overall rise/fall time of the ADL5519 for pulsed input signals. See the Output Filtering section for more details.	C9, C10 = 1000 pF (Size 0603)
R7, C6	VLVL Interface. VREF can be used to drive VLVL through a voltage divider formed using R7 and C6.	R7 = open (Size 0603) C6 = open (Size 0603)

Downloaded from Arrow.com.

EVALUATION BOARD

EVALUATION BOARD SCHEMATIC AND ARTWORK

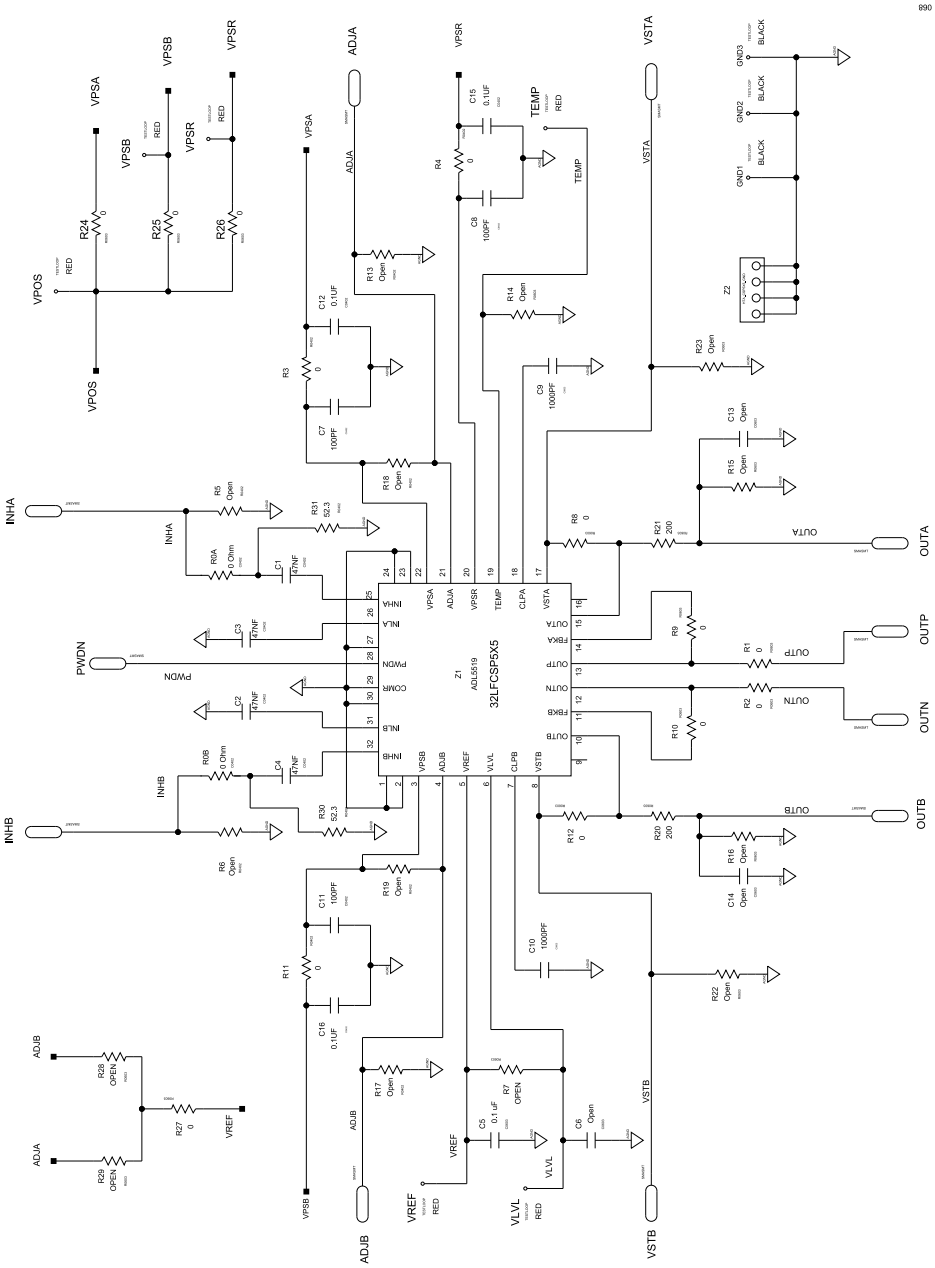

Figure 72. Evaluation Board Schematic

Downloaded from Arrow.com.

EVALUATION BOARD

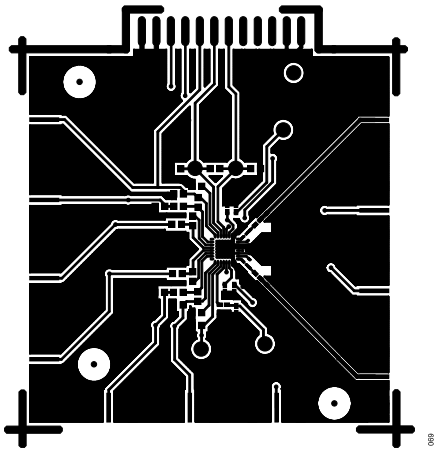

Figure 73. Top Side Layout

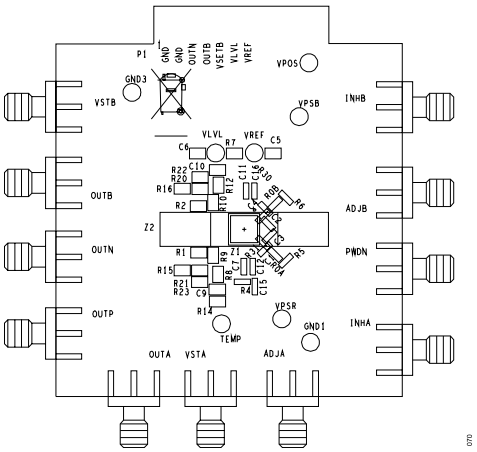

Figure 74. Top Side Silkscreen

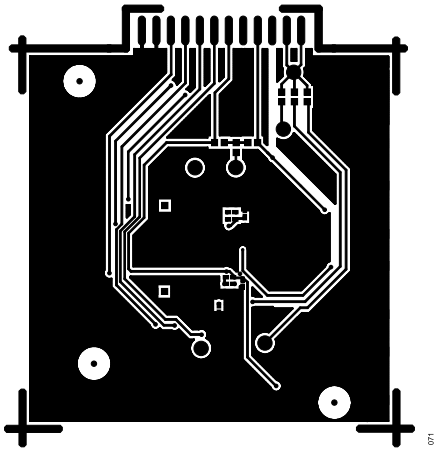

Figure 75. Bottom Side Layout

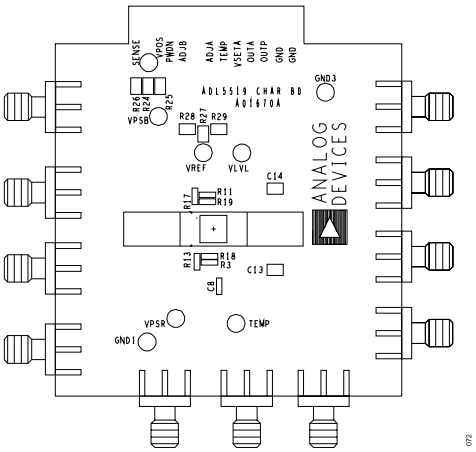

Figure 76. Bottom Side Silkscreen

Downloaded from Arrow.com.

OUTLINE DIMENSIONS

Package Drawing Option	Package Type	Package Description
CP-32-21	LFCSP	32-Lead Lead Frame Chip Scale Package

For the latest package outline information and land patterns (footprints), go to Package Index.

ORDERING GUIDE

Model[1, 2]	Temperature Range	Package Description	Package Option
ADL5519ACPZ-R7	−40°C to +125°C	32-Lead Lead Frame Chip Scale Package [LFCSP]	CP-32-21
ADL5519ACPZ-R2	−40°C to +125°C	32-Lead Lead Frame Chip Scale Package [LFCSP]	CP-32-21
ADL5519ACPZ-WP	−40°C to +125°C	32-Lead Lead Frame Chip Scale Package [LFCSP]	CP-32-21

[1] Z = RoHS Compliant Part.

[2] WP = waffle pack.

EVALUATION BOARDS

Model[1]	Description
ADL5519-EVALZ	Evaluation Board

[1] Z = RoHS Compliant Part.

Legal Terms and Conditions
Analog Devices, Inc. (“ADI”) believes the information in this data sheet is accurate and reliable as of its date of publication and provides it “as is” without any representation or warranty of any kind. ADI reserves the right to make changes, corrections, modifications, enhancements, improvements, and other updates to the information described in this data sheet, with use of the product subject to ADI’s Terms and Conditions of Sale, available on Analog.com. ANALOG DEVICES word mark and logo, AD, and ADI are registered trademarks and trademarks owned by ADI. This data sheet, trademarks, and its content are owned by ADI and may not be reproduced, distributed, or used except with ADI’s prior written authorization. TO THE MAXIMUM EXTENT PERMITTED BY LAW, IN NO EVENT SHALL ADI BE LIABLE FOR ANY DAMAGES WHATSOEVER, WHETHER DIRECT OR INDIRECT, ARISING OUT OF OR IN CONNECTION WITH THE USE OF, INABILITY TO USE, OR RELIANCE UPON THIS DATA SHEET OR THE INFORMATION CONTAINED HEREIN.

Downloaded from Arrow.com.