Quad 2-Input NAND Schmitt Trigger

MM74HC132

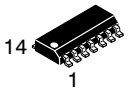

SOIC-14 NB
CASE 751A-03

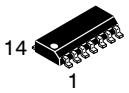

SOIC-14
CASE 751EF

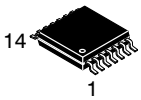

TSSOP-14 WB
CASE 948G

General Description

The MM74HC132 utilizes advanced silicon-gate CMOS technology to achieve the low power dissipation and high noise immunity of standard CMOS, as well as the capability to drive 10 LS-TTL loads.

The 74HC logic family is functionally and pinout compatible with the standard 74LS logic family. All inputs are protected from damage due to static discharge by internal diode clamps to V_{CC} and ground.

Features

- Typical Propagation Delay: 12 ns
- Wide Power Supply Range: 2 V – 6 V
- Low Quiescent Current: 40 μA maximum (74HC Series)
- Low Input Current: 1 μA Maximum
- Fanout of 10 LS-TTL Loads
- Typical Hysteresis Voltage: 0.9 V at V_{CC} = 4.5 V
- These Devices are Pb-Free, Halide Free and are RoHS Compliant

Logic Diagram

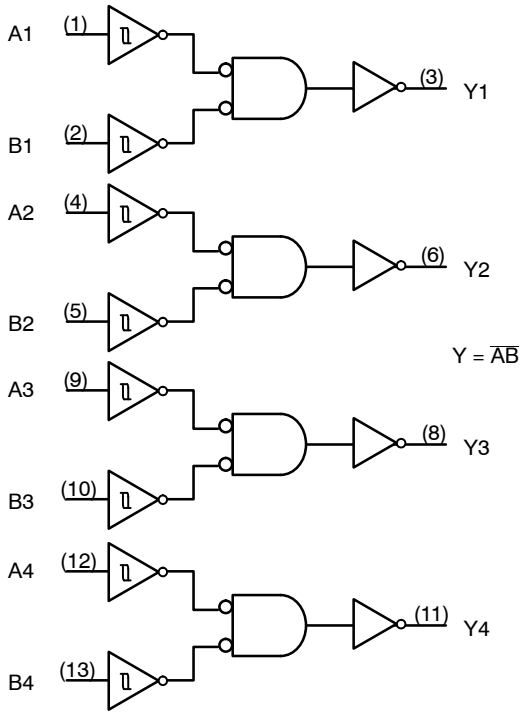

MARKING DIAGRAMS

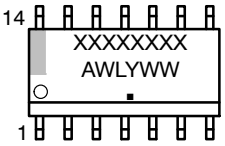

(SOIC-14, SOIC-14 NB)

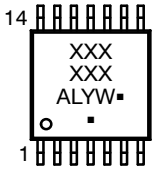

(TSSOP-14 WB)

XXXXXX	= Specific Device Code
A	= Assembly Location
WL, L	= Wafer Lot
Y	= Year
WW, W	= Work Week
▪	= Pb-Free Package

(Note: Microdot may be in either location)

ORDERING INFORMATION

See detailed ordering and shipping information on page 4 of this data sheet.

© Semiconductor Components Industries, LLC, 1983

Downloaded from Arrow.com.

CONNECTION DIAGRAM
Pin Assignments for SOIC and TSSOP

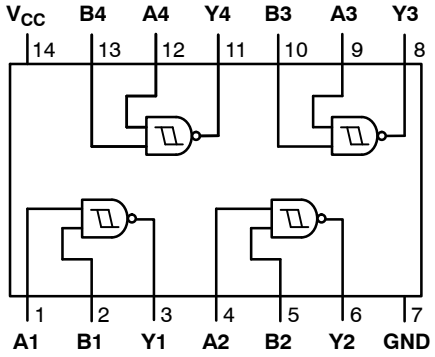

(Top View)

ABSOLUTE MAXIMUM RATINGS (Note 1)

Symbol	Parameter	Rating	Units
V_{CC}	Supply Voltage	–0.5 to +6.5	V
V_{IN}	DC Input Voltage	–0.5 to V_{CC} + 0.5	V
V_{OUT}	DC Output Voltage	–0.5 to V_{CC} + 0.5	V
I_{IK}, I_{OK}	Clamp Diode Current	±20	mA
I_{OUT}	DC Output Current, per Pin	±25	mA
I_{CC}	DC V_{CC} or GND Current, per Pin	±50	mA
T_{STG}	Storage Temperature Range	–65 to +150	°C
P_D	Power Dissipation SOIC-14 TSSOP-14	1077 833	mW
T_L	Lead Temperature (Soldering 10 Seconds)	260	°C

Stresses exceeding those listed in the Maximum Ratings table may damage the device. If any of these limits are exceeded, device functionality should not be assumed, damage may occur and reliability may be affected.
1. Unless otherwise specified all voltages are referenced to ground.

RECOMMENDED OPERATING CONDITIONS

Symbol	Parameter	Min	Max	Unit
V_{CC}	Supply Voltage	2	6	V
V_{IN}, V_{OUT}	DC Input or Output Voltage	0	V_{CC}	V
T_A	Operating Temperature Range	–55	+125	°C

Functional operation above the stresses listed in the Recommended Operating Ranges is not implied. Extended exposure to stresses beyond the Recommended Operating Ranges limits may affect device reliability.

Share Feedback
Your Opinion Matters

Downloaded from Arrow.com.

DC CHARACTERISTICS (Note 2)

Symbol	Parameter	V_{CC} (V)	Conditions	T_A = 25 °C	T_A = −40 °C to 85 °C	T_A = −55 °C to 125 °C	Unit
				Typ	Guaranteed Limits		
V_{T+} min	Positive Going Threshold Voltage	2.0			1.0	1.0	1.0	V
		4.5			2.0	2.0	2.0	
		6.0			3.0	3.0	3.0	
V_{T+} max		2.0			1.5	1.5	1.5	V
		4.5			3.15	3.15	3.15	
		6.0			4.2	4.2	4.2	
V_{T-} min	Negative Going Threshold Voltage	2.0			0.3	0.3	0.3	V
		4.5			0.9	0.9	0.9	
		6.0			1.2	1.2	1.2	
V_{T-} max		2.0			1.0	1.0	1.0	V
		4.5			2.2	2.2	2.2	
		6.0			3.0	3.0	3.0	
V_H min	Hysteresis Voltage	2.0			0.2	0.2	0.2	V
		4.5			0.4	0.4	0.4	
		6.0			0.5	0.5	0.5	
V_H max		2.0			1.0	1.0	1.0	V
		4.5			1.4	1.4	1.4	
		6.0			1.5	1.5	1.5	
V_{OH}	Minimum HIGH Level Output Voltage	2.0	$V_{IN} = V_{IH}$ or V_{IL}, $\|I_{OUT}\| \le 20$ μA	2.0	1.9	1.9	1.9	V
		4.5		4.5	4.4	4.4	4.4	
		6.0		6.0	5.9	5.9	5.9	
		4.5	$V_{IN} = V_{IH}$ or V_{IL}, $\|I_{OUT}\| \le 4.0$ mA	4.2	3.98	3.84	3.7	
		6.0	$V_{IN} = V_{IH}$ or V_{IL}, $\|I_{OUT}\| \le 5.2$ mA	5.7	5.48	5.34	5.2	
V_{OL}	Maximum LOW Level Output Voltage	2.0	$V_{IN} = V_{IH}$ or V_{IL}, $\|I_{OUT}\| \le 20$ μA	0	0.1	0.1	0.1	V
		4.5		0	0.1	0.1	0.1	
		6.0		0	0.1	0.1	0.1	
		4.5	$V_{IN} = V_{IH}$ or V_{IL}, $\|I_{OUT}\| \le 4.0$ mA	0.2	0.26	0.33	0.4	
		6.0	$V_{IN} = V_{IH}$ or V_{IL}, $\|I_{OUT}\| \le 5.2$ mA	0.2	0.26	0.33	0.4	
I_{IN}	Maximum Input Current	6.0	$V_{IN} = V_{CC}$ or GND		±0.1	±1.0	±1.0	μA
I_{CC}	Maximum Quiescent Supply Current	6.0	$V_{IN} = V_{CC}$ or GND, I_{OUT} = 0 μA		2.0	20	40	μA

2. For a power supply of 5 V ±10% the worst case output voltages (V_{OH}, and V_{OL}) occur for HC at 4.5 V. Thus the 4.5 V values should be used when designing with this supply. Worst case V_{IH} and V_{IL} occur at V_{CC} = 5.5 V and 4.5 V respectively. (The V_{IH} value at 5.5 V is 3.85 V.) The worst case leakage current (I_{IN}, I_{CC}, and I_{OZ}) occur for CMOS at the higher voltage and so the 6.0 V values should be used.

Share Feedback
Your Opinion Matters

Downloaded from Arrow.com.

AC CHARACTERISTICS (V_{CC} = 5 V, T_A = 25 °C, C_L = 15 pF, $t_r = t_f$ = 6 ns)

Symbol	Parameter	Conditions	Typ	Guaranteed Limit	Unit
t_{PHL}, t_{PLH}	Maximum Propagation Delay		12	20	ns

AC CHARACTERISTICS (V_{CC} = 2.0 V to 6.0 V, C_L = 50 pF, $t_r = t_f$ = 6 ns (unless otherwise specified))

Symbol	Parameter	V_{CC} (V)	Conditions	T_A = 25 °C		T_A = −40 °C to 85 °C	T_A = −55 °C to 125 °C	Unit
				Typ	Guaranteed Limits			
t_{PHL}, t_{PLH}	Maximum Propagation Delay	2.0		63	125	158	186	ns
		4.5		13	25	32	37	
		6.0		11	21	27	32	
t_{TLH}, t_{THL}	Maximum Output Rise and Fall Time	2.0		30	75	95	110	ns
		4.5		8	15	19	22	
		6.0		7	13	16	19	
C_{PD}	Power Dissipation Capacitance (Note 3)		(per gate)	130				pF
C_{IN}	Maximum Input Capacitance				5	10	10	pF

3. C_{PD} determines the no load dynamic power consumption, $P_D = C_{PD} V_{CC}^2 f + I_{CC} V_{CC}$, and the no load dynamic current consumption, $I_S = C_{PD} V_{CC} f + I_{CC}$.

ORDERING INFORMATION

Part Number	Marking	Package	Shipping†
MM74HC132M	HC132A	SOIC-14 NB, Case 751A-03	55 Units / Tube
MM74HC132MX	HC132A	SOIC-14, Case 751EF	2500 / Tape & Reel
MM74HC132MTC	HC 132A	TSSOP-14 WB, Case 948G	96 Units / Tube
MM74HC132MTCX	HC 132A	TSSOP-14 WB, Case 948G	2500 / Tape & Reel

†For information on tape and reel specifications, including part orientation and tape sizes, please refer to our Tape and Reel Packaging Specifications Brochure, BRD8011/D.

NOTE: Device also available in Tape and Reel. Specify by appending suffix letter “X” to the ordering number.

Share Feedback
Your Opinion Matters

Downloaded from Arrow.com.

REVISION HISTORY

Revision	Description of Changes	Date
4	Edits to the package name labels and add another package option	10/19/2026

This document has undergone updates prior to the inclusion of this revision history table. The changes tracked here only reflect updates made on the noted approval dates.

Share Feedback
Your Opinion Matters

Downloaded from Arrow.com.

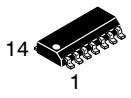

SCALE 1:1

SOIC−14 NB
CASE 751A−03
ISSUE L

DATE 03 FEB 2016

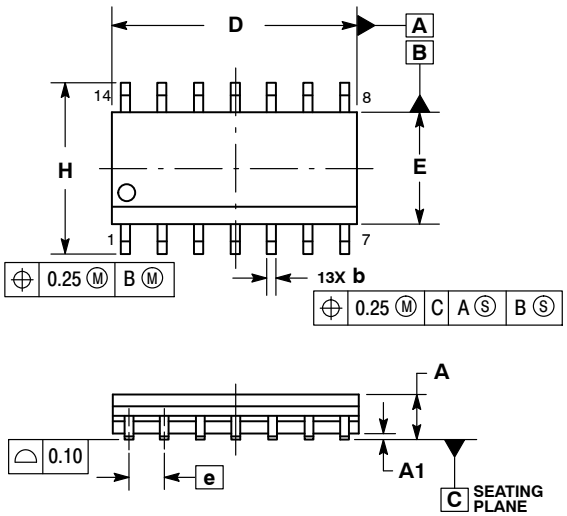

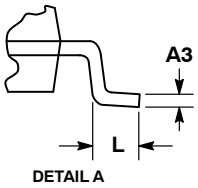

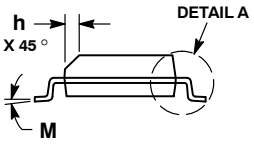

NOTES:
1. DIMENSIONING AND TOLERANCING PER ASME Y14.5M, 1994.
2. CONTROLLING DIMENSION: MILLIMETERS.
3. DIMENSION b DOES NOT INCLUDE DAMBAR PROTRUSION. ALLOWABLE PROTRUSION SHALL BE 0.13 TOTAL IN EXCESS OF AT MAXIMUM MATERIAL CONDITION.
4. DIMENSIONS D AND E DO NOT INCLUDE MOLD PROTRUSIONS.
5. MAXIMUM MOLD PROTRUSION 0.15 PER SIDE.

	MILLIMETERS		INCHES	
DIM	MIN	MAX	MIN	MAX
A	1.35	1.75	0.054	0.068
A1	0.10	0.25	0.004	0.010
A3	0.19	0.25	0.008	0.010
b	0.35	0.49	0.014	0.019
D	8.55	8.75	0.337	0.344
E	3.80	4.00	0.150	0.157
e	1.27 BSC		0.050 BSC	
H	5.80	6.20	0.228	0.244
h	0.25	0.50	0.010	0.019
L	0.40	1.25	0.016	0.049
M	0 °	7 °	0 °	7 °

SOLDERING FOOTPRINT*

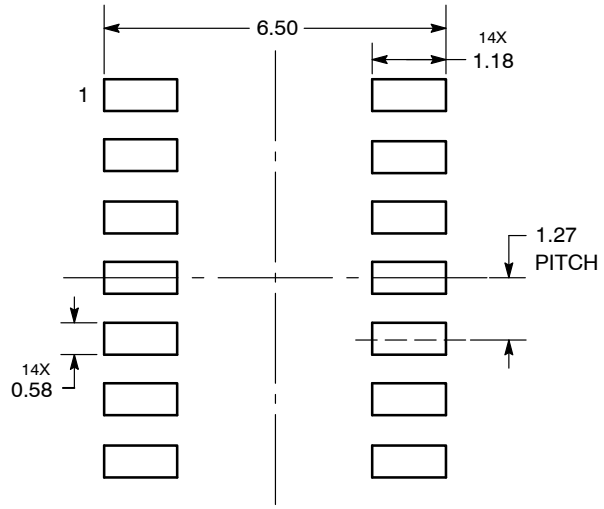

DIMENSIONS: MILLIMETERS

*For additional information on our Pb−Free strategy and soldering details, please download the **onsemi** Soldering and Mounting Techniques Reference Manual, SOLDERRM/D.

GENERIC MARKING DIAGRAM*

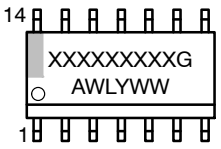

XXXXX = Specific Device Code
A = Assembly Location
WL = Wafer Lot
Y = Year
WW = Work Week
G = Pb−Free Package

*This information is generic. Please refer to device data sheet for actual part marking. Pb−Free indicator, “G” or microdot “▪”, may or may not be present. Some products may not follow the Generic Marking.

STYLES ON PAGE 2

DOCUMENT NUMBER:	**98ASB42565B**	Electronic versions are uncontrolled except when accessed directly from the Document Repository. Printed versions are uncontrolled except when stamped “CONTROLLED COPY” in red.
DESCRIPTION:	**SOIC−14 NB**	**PAGE 1 OF 2**

onsemi and onsemi are trademarks of Semiconductor Components Industries, LLC dba **onsemi** or its subsidiaries in the United States and/or other countries. **onsemi** reserves the right to make changes without further notice to any products herein. **onsemi** makes no warranty, representation or guarantee regarding the suitability of its products for any particular purpose, nor does **onsemi** assume any liability arising out of the application or use of any product or circuit, and specifically disclaims any and all liability, including without limitation special, consequential or incidental damages. **onsemi** does not convey any license under its patent rights nor the rights of others.

Downloaded from Arrow.com.

SOIC−14
CASE 751A−03
ISSUE L

DATE 03 FEB 2016

STYLE 1:
PIN 1. COMMON CATHODE
2. ANODE/CATHODE
3. ANODE/CATHODE
4. NO CONNECTION
5. ANODE/CATHODE
6. NO CONNECTION
7. ANODE/CATHODE
8. ANODE/CATHODE
9. ANODE/CATHODE
10. NO CONNECTION
11. ANODE/CATHODE
12. ANODE/CATHODE
13. NO CONNECTION
14. COMMON ANODE

STYLE 2:
CANCELLED

STYLE 3:
PIN 1. NO CONNECTION
2. ANODE
3. ANODE
4. NO CONNECTION
5. ANODE
6. NO CONNECTION
7. ANODE
8. ANODE
9. ANODE
10. NO CONNECTION
11. ANODE
12. ANODE
13. NO CONNECTION
14. COMMON CATHODE

STYLE 4:
PIN 1. NO CONNECTION
2. CATHODE
3. CATHODE
4. NO CONNECTION
5. CATHODE
6. NO CONNECTION
7. CATHODE
8. CATHODE
9. CATHODE
10. NO CONNECTION
11. CATHODE
12. CATHODE
13. NO CONNECTION
14. COMMON ANODE

STYLE 5:
PIN 1. COMMON CATHODE
2. ANODE/CATHODE
3. ANODE/CATHODE
4. ANODE/CATHODE
5. ANODE/CATHODE
6. NO CONNECTION
7. COMMON ANODE
8. COMMON CATHODE
9. ANODE/CATHODE
10. ANODE/CATHODE
11. ANODE/CATHODE
12. ANODE/CATHODE
13. NO CONNECTION
14. COMMON ANODE

STYLE 6:
PIN 1. CATHODE
2. CATHODE
3. CATHODE
4. CATHODE
5. CATHODE
6. CATHODE
7. CATHODE
8. ANODE
9. ANODE
10. ANODE
11. ANODE
12. ANODE
13. ANODE
14. ANODE

STYLE 7:
PIN 1. ANODE/CATHODE
2. COMMON ANODE
3. COMMON CATHODE
4. ANODE/CATHODE
5. ANODE/CATHODE
6. ANODE/CATHODE
7. ANODE/CATHODE
8. ANODE/CATHODE
9. ANODE/CATHODE
10. ANODE/CATHODE
11. COMMON CATHODE
12. COMMON ANODE
13. ANODE/CATHODE
14. ANODE/CATHODE

STYLE 8:
PIN 1. COMMON CATHODE
2. ANODE/CATHODE
3. ANODE/CATHODE
4. NO CONNECTION
5. ANODE/CATHODE
6. ANODE/CATHODE
7. COMMON ANODE
8. COMMON ANODE
9. ANODE/CATHODE
10. ANODE/CATHODE
11. NO CONNECTION
12. ANODE/CATHODE
13. ANODE/CATHODE
14. COMMON CATHODE

onsemi and ONSEMI are trademarks of Semiconductor Components Industries, LLC dba **onsemi** or its subsidiaries in the United States and/or other countries. **onsemi** reserves the right to make changes without further notice to any products herein. **onsemi** makes no warranty, representation or guarantee regarding the suitability of its products for any particular purpose, nor does **onsemi** assume any liability arising out of the application or use of any product or circuit, and specifically disclaims any and all liability, including without limitation special, consequential or incidental damages. **onsemi** does not convey any license under its patent rights nor the rights of others.

© Semiconductor Components Industries, LLC, 2019

Downloaded from Arrow.com.

SOIC14
CASE 751EF
ISSUE O

DATE 30 SEP 2016

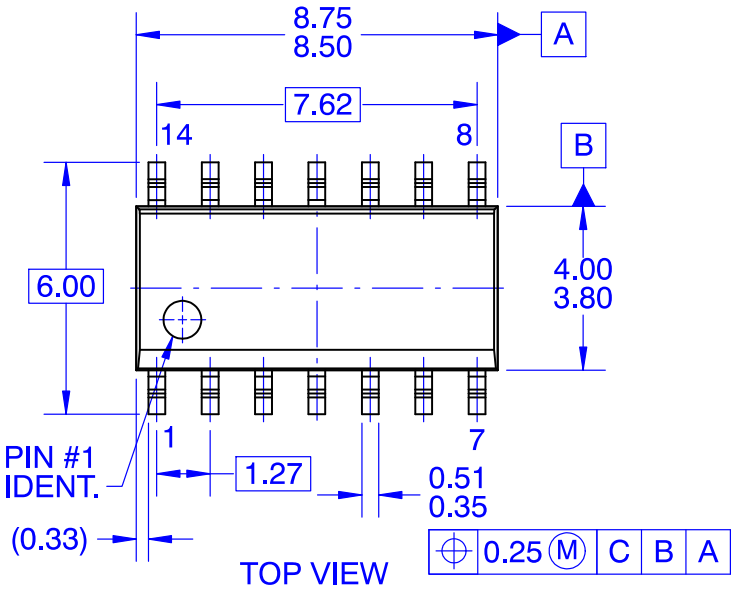

TOP VIEW

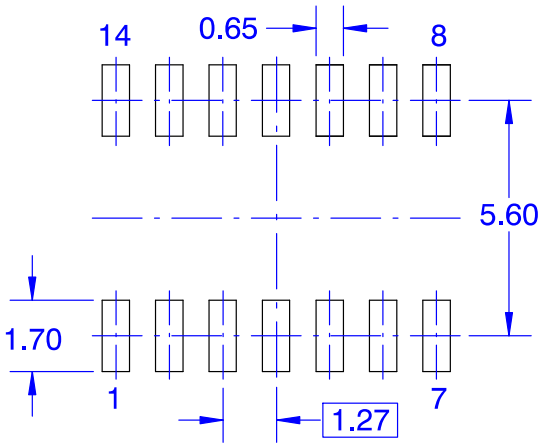

LAND PATTERN RECOMMENDATION

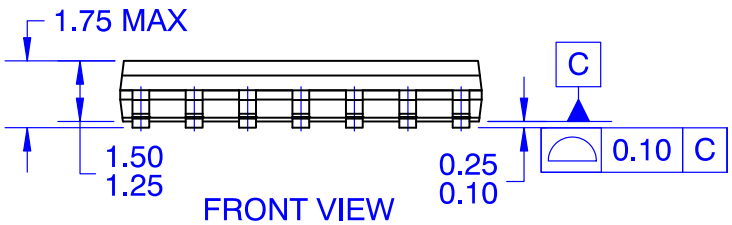

FRONT VIEW

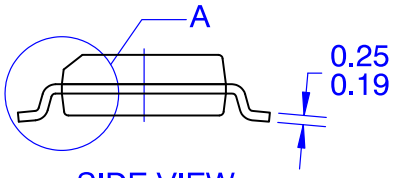

SIDE VIEW

NOTES:
A. CONFORMS TO JEDEC MS−012, VARIATION AB, ISSUE C
B. ALL DIMENSIONS ARE IN MILLIMETERS
C. DIMENSIONS DO NOT INCLUDE MOLD FLASH OR BURRS
D. LAND PATTERN STANDARD: SOIC127P600X145−14M
E. CONFORMS TO ASME Y14.5M, 2009

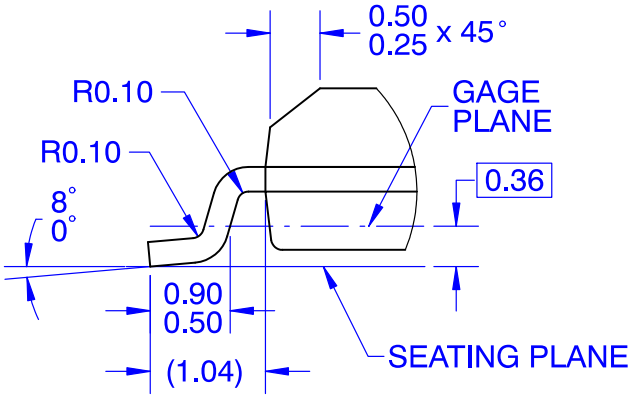

DETAIL A
SCALE 16 : 1

DOCUMENT NUMBER:	**98AON13739G**	Electronic versions are uncontrolled except when accessed directly from the Document Repository. Printed versions are uncontrolled except when stamped "CONTROLLED COPY" in red.	
DESCRIPTION:	**SOIC14**		**PAGE 1 OF 1**

onsemi and ONSEMI are trademarks of Semiconductor Components Industries, LLC dba **onsemi** or its subsidiaries in the United States and/or other countries. **onsemi** reserves the right to make changes without further notice to any products herein. **onsemi** makes no warranty, representation or guarantee regarding the suitability of its products for any particular purpose, nor does **onsemi** assume any liability arising out of the application or use of any product or circuit, and specifically disclaims any and all liability, including without limitation special, consequential or incidental damages. **onsemi** does not convey any license under its patent rights nor the rights of others.

Downloaded from Arrow.com.

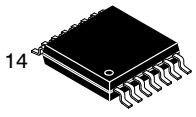

TSSOP−14 5.00x4.40x0.95, 0.65P
CASE 948G
ISSUE D

DATE 30 JUN 2026

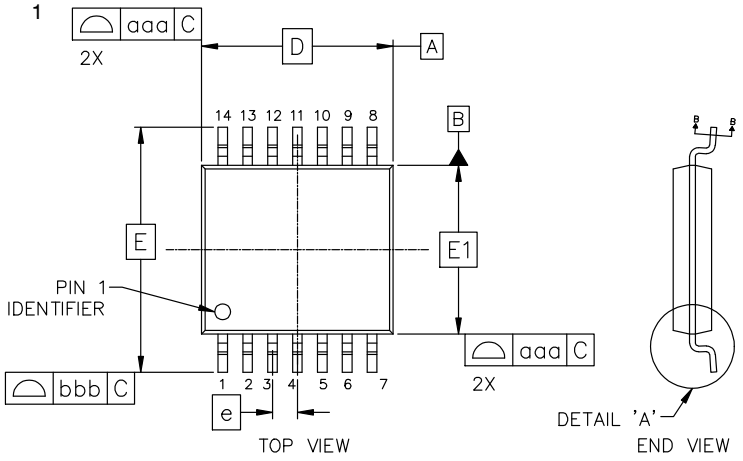

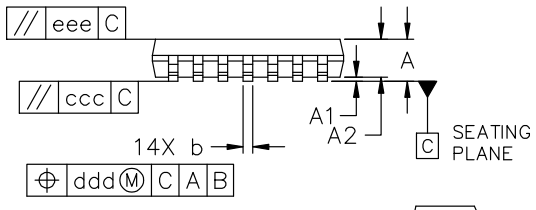

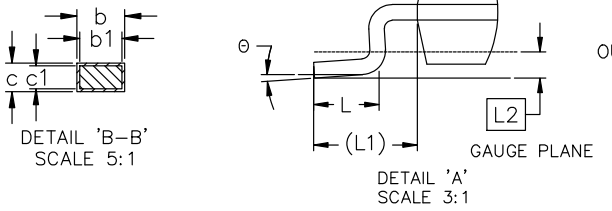

MILLIMETERS			
DIM	MIN	NOM	MAX
A	−−−	−−−	1.20
A1	0.05	0.10	0.15
A2	0.85	0.95	1.05
b	0.19	0.25	0.30
b1	0.19	0.22	0.25
c	0.09	0.15	0.20
c1	0.09	0.12	0.16
D	5.00 BSC		
E	6.40 BSC		
E1	4.40 BSC		
e	0.65 BSC		
L	0.50	0.63	0.75
L1	1.00 REF		
L2	0.25 BSC		
θ	0°	4°	8°
TOLERANCE FORM & POSITION			
aaa	0.10		
bbb	0.15		
ccc	0.08		
ddd	0.10		
eee	0.10		

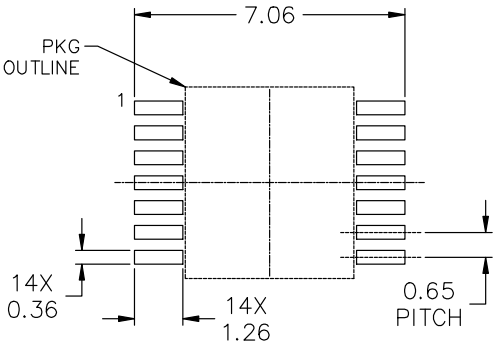

RECOMMENDED MOUNTING FOOTPRINT

*For additional information on our Pb−Free strategy and soldering details, please download the onsemi Soldering and Mounting Techniques Reference Manual, SOLDERRM/D.

NOTES:
1. DIMENSIONING AND TOLERANCING AS PER ASME Y14.5M, 2018.
2. CONTROLLING DIMENSION: MILLIMETER.
3. DIMENSION D DOES NOT INCLIDE MOLD FLASH, PROTRUSIONS OR GATE BURRS. MOLD FLASH OR GATE BURRS SHALL NOT EXCEED 0.15 PER SIDE.
4. DIMENSION E1 DOES NOT INCLUDE INTERLEAD FLASH OR PROTRUSION. INTERLEAD FLASH OR PROTRUSION SHALL NOT EXCEED 0.25 PER SIDE.
5. DIMENSION b DOES NOT INCLUDE DAMBAR PROTRUSION. ALLOWABLE DAMBAR PROTRUSION SHALL BE 0.08 TOTAL IN EXCESS OF THE b DIMENSION AT MAXIMUM MATERIAL CONDITION.
6. TERMINAL NUMBERS ARE SHOWN FOR REFERENCE ONLY.

GENERIC MARKING DIAGRAM*

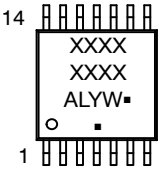

A = Assembly Location
L = Wafer Lot
Y = Year
W = Work Week
▪ = Pb−Free Package
(Note: Microdot may be in either location)

*This information is generic. Please refer to device data sheet for actual part marking. Pb−Free indicator, "G" or microdot "▪", may or may not be present. Some products may not follow the Generic Marking.

DOCUMENT NUMBER:	98ASH70246A	Electronic versions are uncontrolled except when accessed directly from the Document Repository. Printed versions are uncontrolled except when stamped "CONTROLLED COPY" in red.
DESCRIPTION:	TSSOP−14 5.00x4.40x0.95, 0.65P	PAGE 1 OF 1

onsemi and onsemi are trademarks of Semiconductor Components Industries, LLC dba **onsemi** or its subsidiaries in the United States and/or other countries. **onsemi** reserves the right to make changes without further notice to any products herein. **onsemi** makes no warranty, representation or guarantee regarding the suitability of its products for any particular purpose, nor does **onsemi** assume any liability arising out of the application or use of any product or circuit, and specifically disclaims any and all liability, including without limitation special, consequential or incidental damages. **onsemi** does not convey any license under its patent rights nor the rights of others.

Downloaded from Arrow.com.

onsemi, ONSEMI , and other names, marks, and brands are registered and/or common law trademarks of Semiconductor Components Industries, LLC dba "**onsemi**" or its affiliates and/or subsidiaries in the United States and/or other countries. **onsemi** owns the rights to a number of patents, trademarks, copyrights, trade secrets, and other intellectual property. A listing of **onsemi**'s product/patent coverage may be accessed at www.onsemi.com/site/pdf/Patent−Marking.pdf. **onsemi** reserves the right to make changes at any time to any products or information herein, without notice. The information herein is provided "as−is" and **onsemi** makes no warranty, representation or guarantee regarding the accuracy of the information, product features, availability, functionality, or suitability of its products for any particular purpose, nor does **onsemi** assume any liability arising out of the application or use of any product or circuit, and specifically disclaims any and all liability, including without limitation special, consequential or incidental damages. Buyer is responsible for its products and applications using **onsemi** products, including compliance with all laws, regulations and safety requirements or standards, regardless of any support or applications information provided by **onsemi**. "Typical" parameters which may be provided in **onsemi** data sheets and/or specifications can and do vary in different applications and actual performance may vary over time. All operating parameters, including "Typicals" must be validated for each customer application by customer's technical experts. **onsemi** does not convey any license under any of its intellectual property rights nor the rights of others. **onsemi** products are not designed, intended, or authorized for use as a critical component in life support systems or any FDA Class 3 medical devices or medical devices with a same or similar classification in a foreign jurisdiction or any devices intended for implantation in the human body. Should Buyer purchase or use **onsemi** products for any such unintended or unauthorized application, Buyer shall indemnify and hold **onsemi** and its officers, employees, subsidiaries, affiliates, and distributors harmless against all claims, costs, damages, and expenses, and reasonable attorney fees arising out of, directly or indirectly, any claim of personal injury or death associated with such unintended or unauthorized use, even if such claim alleges that **onsemi** was negligent regarding the design or manufacture of the part. **onsemi** is an Equal Opportunity/Affirmative Action Employer. This literature is subject to all applicable copyright laws and is not for resale in any manner.

ADDITIONAL INFORMATION

TECHNICAL PUBLICATIONS:
Technical Library: www.onsemi.com/design/resources/technical−documentation
onsemi Website: www.onsemi.com

ONLINE SUPPORT: www.onsemi.com/support
For additional information, please contact your local Sales Representative at www.onsemi.com/support/sales

◊

Downloaded from Arrow.com.