150W Quarter Brick 60~160Vdc wide Input Railway DC-DC Converter RQB150W3 series

(Bottom View)

Features

- Quarter-brick(2.28" x 1.45" x 0.5") with industrial standard pin-out
- Compliance with railway standard EN50155
- 3:1(60~160Vdc) wide input range
- Wide operating temperature range -40 ~ +90℃
- No minimum load required
- Full encapsulated
- Protections: Short circuit (Continuous) / Overload / Over temperature / Over voltage / Input under voltage lockout
- 3KVAC I/O isolation
- Remote ON/OFF control and remote sense
- Triming output(±10%)
- 3 years warranty

Applications

- Bus, tram, metro or railway system
- Telecom/datacom system
- Wireless network
- Industrial control facility
- Instrument
- Analyzer
- Highly vibrating, heavily dusty, exteremely low or high temperature harsh environment

GTIN CODE

MW Search: https://www.meanwell.com/serviceGTIN.aspx

Description

RQB150W3 series is 150W module type DC-DC reliable railway with quarter brick package. It features international standard pins, a high efficiency up to 89%, wide working temperature range -40~+90℃, 3KVAC I/P-O/P isolation voltage, meet EN50155 with external circuits, continuous-mode short circuit protection, etc. The models input for 60~160VDC 3:1 wide input range, and various output voltage, 12V/24V/48V/54V for single output, which are suitable for railway, trams, buses and also can be used in the harsh environment with high vibration, high dust, extremely low or high temperature, etc.

Model Encoding

RQB 150 W3 – 110 S 12

- 12 — Output voltage (12/24/48/54Vdc)
- S — Single output
- 110 — Nominal input voltage (110Vdc)
- W3 — 3:1 wide input voltage (60~160Vdc)
- 150 — Rated wattage
- RQB — Series name

Downloaded from Arrow.com.

MODEL SELECTION TABLE

ORDER NO.	INPUT			OUTPUT		EFFICIENCY (Typ.)	CAPACITOR LOAD (MAX.)
	INPUT VOLTAGE (RANGE)	INPUT CURRENT		OUTPUT VOLTAGE	OUTPUT CURRENT		
		NO LOAD	FULL LOAD				
RQB150W3-110S12	Nominal 72V,96V,110V (60 ~ 160V)	10mA	1.54A	12V	12.5A	88.5%	5000μF
RQB150W3-110S24		10mA	1.52A	24V	6.25A	89%	2000μF
RQB150W3-110S48		10mA	1.54A	48V	3.125A	88%	1000μF
RQB150W3-110S54		10mA	1.55A	54V	2.778A	88%	1000μF

Downloaded from Arrow.com.

SPECIFICATION

INPUT	VOLTAGE RANGE	60 ~ 160Vdc		
	SURGE VOLTAGE (0.1s max.)	200Vdc		
	FILTER	Pi type		
	PROTECTION	4A/250Vac time delay fuse		
	SETUP TIME	300ms max. (100% Load at Nominal Vin)		
OUTPUT	VOLTAGE ACCURACY	±1.0%		
	RATED POWER	150W		
	RIPPLE & NOISE Note.2	12V/24V=240mVp-p, 48V/54V=480mVp-p		
	LINE REGULATION Note.3	±0.2%		
	LOAD REGULATION Note.4	±0.4%		
	SWITCHING FREQUENCY (Typ.)	250KHz		
	EXTERNAL TRIM ADJ. RANGE (Typ.)	±10%		
	HOLD UP TIME	Please refer to page 5 Hold up time		
PROTECTION	SHORT CIRCUIT	Protection type : Continuous, automatic recovery		
	OVERLOAD	120 ~ 200% rated output power		
		Protection type : Recovers automatically after fault condition is removed		
	OVER VOLTAGE	110 ~ 150% rated output power		
		Protection type : Shutdown (latch)		
	OVER TEMPERATURE	+115℃ thermal shutdown, recovers automatically after fault condition is removed		
	UNDER VOLTAGE LOCKOUT	Start-up voltage	59V	
		Shutdown voltage	54V	
FUNCTION	REMOTE CONTROL	Power ON: R.C ~ -Vin > 3 ~ 12Vdc or open circuit Power OFF: R.C ~ -Vin < 1.2Vdc or short		
ENVIRONMENT	COOLING	Free-air convection		
	WORKING TEMP.	-40 ~ +90℃ (Refer to "Derating Curve")		
	CASE TEMPERATURE	+115℃ max.		
	WORKING HUMIDITY	5% ~ 90% RH non-condensing		
	STORAGE TEMP., HUMIDITY	-55 ~ +125℃, 10 ~ 95% RH non-condensing		
	TEMP. COEFFICIENT	0.05% / ℃ (0 ~ 65℃)		
	SOLDERING TEMPERATURE	1.5mm from case of 3 ~ 5sec./260℃ max.		
	VIBRATION	EN61373		
	OPERATING ALTITUDE	4000 meters		
SAFETY & EMC (Note.6)	SAFETY STANDARDS	LVD IEC62368-1, EAC TP TC 020/2011 approved		
	WITHSTAND VOLTAGE	I/P-O/P:3KVAC I/P-CASE:1.5KVAC		
	ISOLATION RESISTANCE	I/P-O/P:1000M Ohms / 500VDC / 25℃/ 70% RH non-condensing		
	ISOLATION CAPACITANCE (Typ.)	3000pF		
	EMC EMISSION	**Parameter**	**Standard**	**Test Level / Note**
		Conducted	BS EN/EN55032	Class A/B with external components
		Radiated	BS EN/EN55032	Class A/B with external components
	EMC IMMUNITY	**Parameter**	**Standard**	**Test Level / Note**
		ESD	BS EN/EN61000-4-2	Level 3, ±6KV contact
		Radiated Susceptibility	BS EN/EN61000-4-3	Level 3, 10V/m
		EFT/Bursts(Note.5)	BS EN/EN61000-4-4	Level 3, On power input port, ±2KV external input capacitor required
		Surge(Note.5)	BS EN/EN61000-4-5	Level 3, On power input port, ±2KV external input capacitor required
		Conducted	BS EN/EN61000-4-6	Level 3, 10V/m(r.m.s.)
		Magnetic Field	BS EN/EN61000-4-8	Level 4, 30A/m
	RAILWAY STANDARD	EN50155 including EN61373 for shock & vibration, EN50121-3-2 for EMC		
OTHERS	MTBF	200Khrs MIL-HDBK-217F(25℃)		
	DIMENSION (L*W*H)	**57.9*36.8*12.7mm (2.28*1.45*0.5 inch)**		
	CASE MATERIAL	Aluminum base plate with plastic case		
	PACKING	70g ; 11pcs/per tube, 132pcs/12 tube/per carton		

NOTE

1. All parameters are specified at normal input(110Vdc), rated load, 25℃ 70% RH ambient.
2. Ripple & noise are measured at 20MHz by using a 12" twisted pair terminated with a 0.1μf & 47μf capacitor.
3. Line regulation is measured from low line to high line at rated load.
4. Load regulation is measured from 0% to 100% rated load.
5. External input capacitor required 100μF/220V x 3 (E-Cap.)
6. The final equipment must be re-confirm that it still meet EMC directives. For guidance on how to perform these EMC tests, please refer to "EMI testing of component power supplies."(as available on http://www.meanwell.com)

※ Product Liability Disclaimer : For detailed information, please refer to https://www.meanwell.com/serviceDisclaimer.aspx

Downloaded from Arrow.com.

External Output Trimming

In order to trim the voltage up or down, one needs to connect the trim resistor either between the trim pin and -Vout for trim_up or between trim pin and +Vout for trim_down. The output voltage trim range is -10% to +10%. This is shown in Figures 1 and 2:

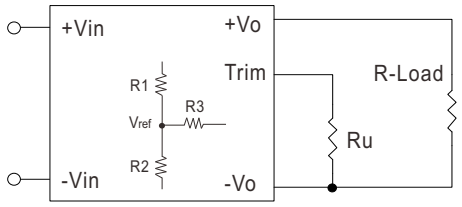

Figure 1. Trim_up Voltage Setup

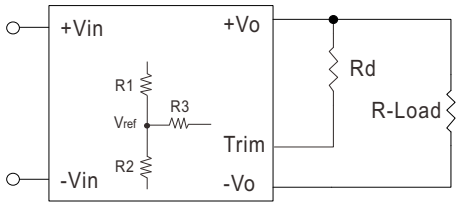

Figure 2. Trim_down Voltage Setup

1. The value of Rtrim_up defined as:

$$A = \frac{V_{ref}}{V_o' - V_{ref}} \times R1$$

$$R_{trim_up} = \frac{AR2}{R2-A} - R3$$

For example, to trim_up the output voltage of 12V module (RQB150W3-110S12) by 10% to 13.2V, R_{trim_up} is calculated as follows:

$V_{o,nom} = 12V$
$V_o' = 13.2V$
$V_{ref} = 2.5V$
$R1 = 38K\Omega$
$R2 = 10\ K\Omega$
$R3 = 68K\Omega$

$$A = \frac{V_{ref}}{V_o' - V_{ref}} \times R1$$

$$= \frac{2.5}{13.2 - 2.5} \times 38 = 8.878$$

$$R_{trim_up} = \frac{AR2}{R2-A} - R3$$

$$= \frac{8.878 \times 10}{10 - 8.878} - 68$$

$$= 11.126K\Omega$$

Table 1 – Trim_up and Trim_down Resistor Values

Model Number	Vo,nom (V)	Vref (V)	R1 (KΩ)	R2 (KΩ)	R3 (KΩ)
RQB150W3-110S12	12	2.5	38	10	68
RQB150W3-110S24	24	2.5	86	10	76.8
RQB150W3-110S48	48	2.5	182	10	80.6
RQB150W3-110S54	54	2.5	206.1	10	82

Note:
1.R_{trim_up}, R_{trim_down} is mean trim resistor, please check the formula.
2.A & B: user define parameter, no actual meanings.
3.Vo′ is target trim voltage.
4.Value for R1, R2, R3 and Vref refer to above table.

2. The value of Rtrim_down defined as:

$$A = \frac{V_o' - V_{ref}}{V_{ref}} \times R2$$

$$R_{trim_down} = \frac{AR1}{R1-A} - R3$$

For example, to trim_down the output voltage of 12V module (RQB150W3-110S12) by 10% to 10.8V, R_{trim_down} is calculated as follows:

$V_{o,nom} = 12V$
$V_o' = 10.8V$
$V_{ref} = 2.5V$
$R1 = 38\ K\Omega$
$R2 = 10\ K\Omega$
$R3 = 68\ K\Omega$

$$A = \frac{V_o' - V_{ref}}{V_{ref}} \times R2$$

$$= \frac{10.8 - 2.5}{2.5} \times 10 = 3.32 \times 10 = 33.2$$

$$R_{trim_down} = \frac{AR1}{R1-A} - R3$$

$$= \frac{33.2 \times 38}{38 - 33.2} - 68$$

$$= 194.83K\Omega$$

Downloaded from Arrow.com.

Hold-up Time

During the transition of different power source, the electric power on the train become unstable in a short time. Such as a sudden voltage drop or a short-term power failure. Under this situation, hold-up time circuit is suitable for this situation.

As Figure 3 shows, hold-up time circuit comprises R1, D1 and Chold. The capacity of Chold decides the hold-up time during interruption of input power.

And Figure 4 shows the table for Chold with different input voltage. For example, if input voltage is 110V, and output load is full load. The Chold need 470μF for hold-up 10ms.

During start up, R1 endures a high pulse power, and should be selected carefully. The power is related to Vbus and Chold. We recommend to use 25Ω/10W resistor.

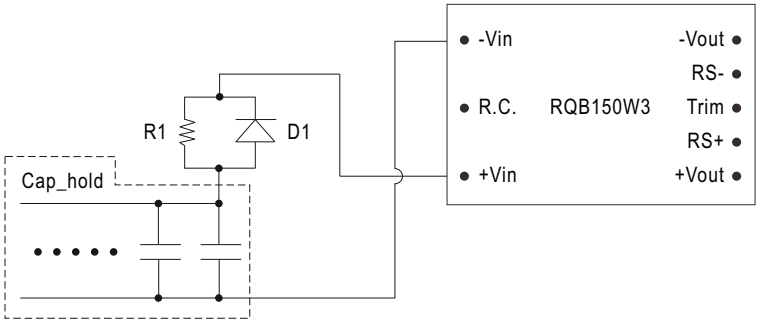

Figure 3 Hold-Up Time Circuit

Table 2 – Cap_hold table (Hold up time)

Nominal Vin	96V	110V
10ms(S2)	680μF	470μF
20ms(S3)	1200μF	820μF
30ms(C2)	1800μF	1200μF

Derating Curve

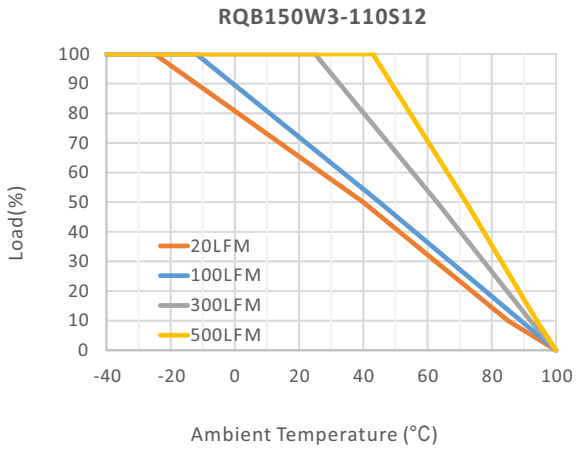

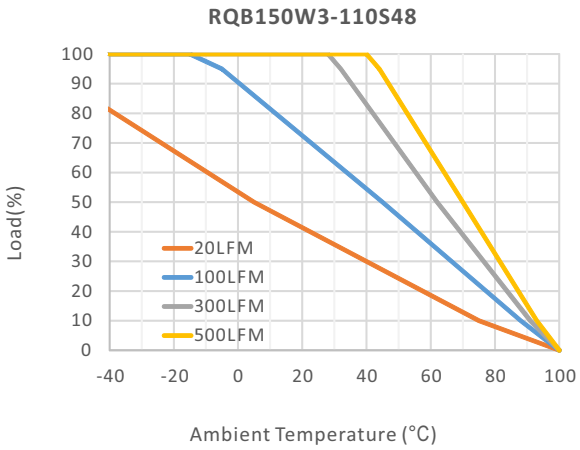

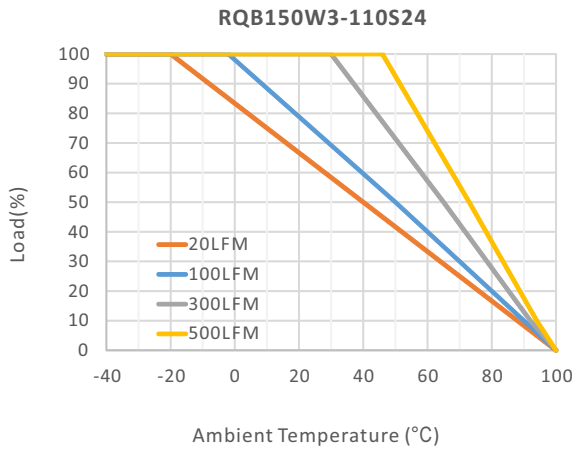

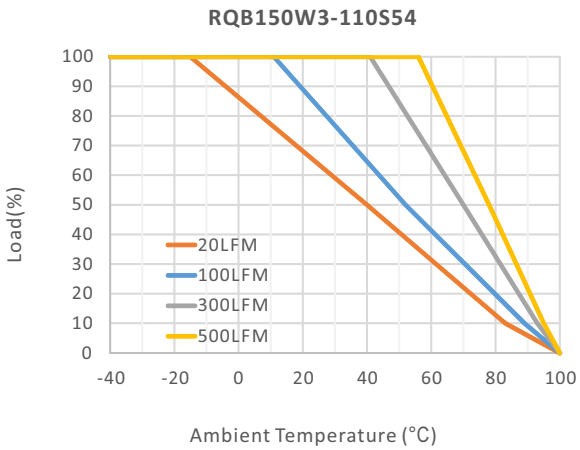

Note 1. The de-rating curve was measured at 110Vdc input with natural convection.

Note 2. In order to meet higher "derating curve" requirements, the heat dissipation can be increased by increasing the air flow (LFM) to meet the requirements.

The recommended thermal resistance formula is as follows：

Downloaded from Arrow.com.

The derating curve of the converter's output load with the ambient temperature. Above derating curve shows the operating ambient temperature range is from -40°C to 100°C. The output load should derating when ambient temperature over -25°C. And the environmental convection is below 20LFM.
When the ambient temperature over -25°C, RQB150W3 should derating to certain load. For example, if the ambient temperature is about 45°C, the RQB150W3 output load should derating to 50% of full load.
The thermal resistor can be calculated by below formula. Take RQB150W3 as an example, which operating at nominal voltage and output load at full load. And the power dissipation (Pd)

$$Pd = Pin - Po = \frac{Po(1-eff)}{eff}$$

Pd = 12*12.5*(1-0.87)/0.87 = 22.4W
So, the power dissipation (Pd) is about 22.4W at ambient temperature 0°C. The thermal resistance (Rca) from case to ambience is 5.75°C/W).
The maximum case temperature rise is ΔT = Pd * Rca = 22.4W * 5.75 (°C/W) = 128.8°C
The maximum case temperature is Ta = Tc - ΔT = 105°C -128.8°C = -23.8°C
So, the Ta for full load is around -25°C

Power Derating Curve

Power module can operate in variety of thermal environments. However, sufficient cooling should be provided to ensure the reliable operation of the unit. Heat can be removed by conduction, convection, and radiation to the surrounding environment.
Figure 4 is the PCB layout, which to measure RQB150W3 thermal performed, the dimension is **137 * 88 * 1.6mm, 2 OZ**. There copper can help RQB150W3 to conduct heat through the body to the PCB.

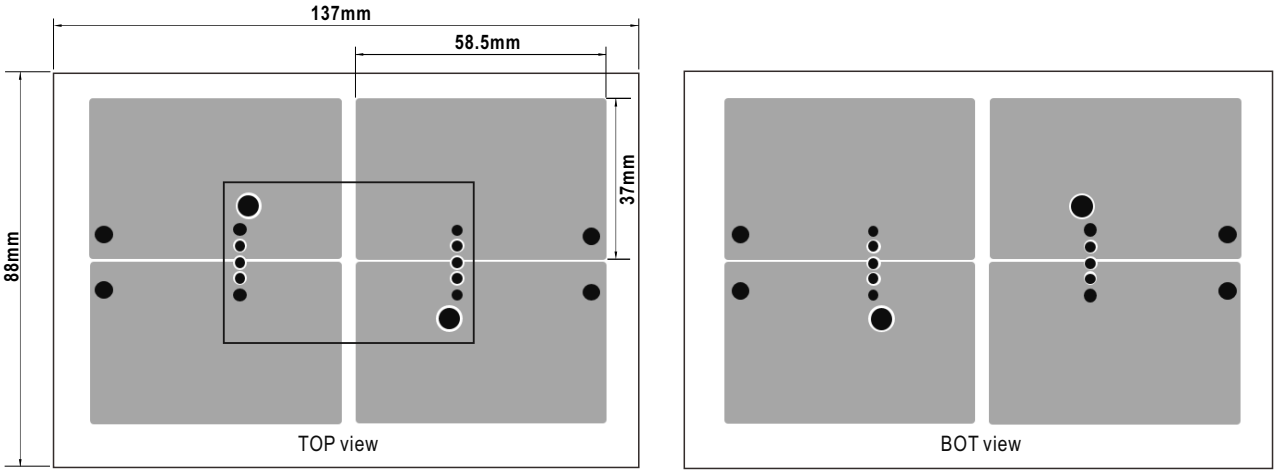

Figure 4

Downloaded from Arrow.com.

■ Mechanical Specification

- All dimensions in mm(inch)
- Tolerance: x.x±0.5mm (x.x±0.02")
  x.xx±0.25mm(x.xx±0.01")
- Pin size is:1.x±0.1mm (0.04"±0.005")

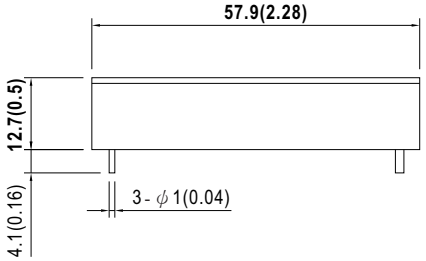

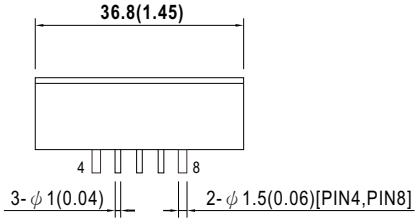

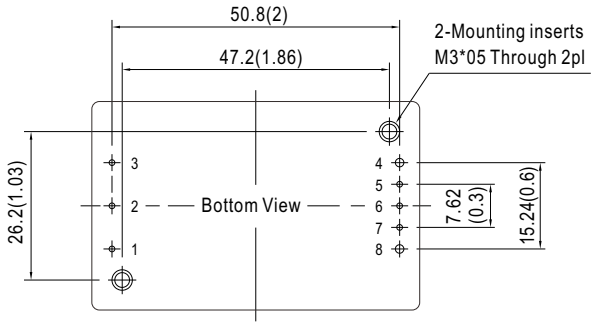

■ Plug Assignment

Pin-Out			
Pin No.	Output	Pin No.	Output
1	+Vin	5	RS-
2	Remote ON/OFF	6	Trim
3	-Vin	7	RS+
4	-Vout	8	+Vout

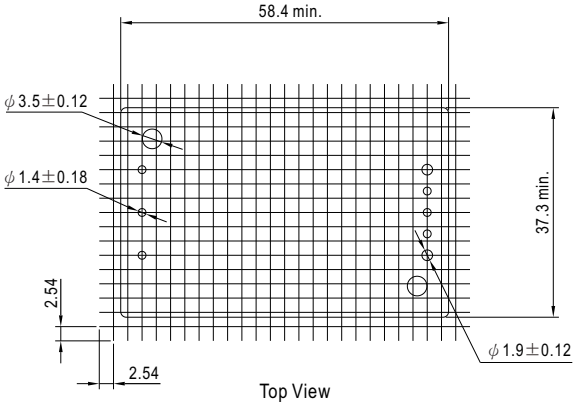

Downloaded from Arrow.com.

■ EMC Suggestion Circuit

※ EMI Test standard: BS EN/EN55032 Class A with external circuit. Below figure shows the suggestion circuit for Class A.
(Test Condition: Input Voltage: 110Vdc, Output Load: Full Load)

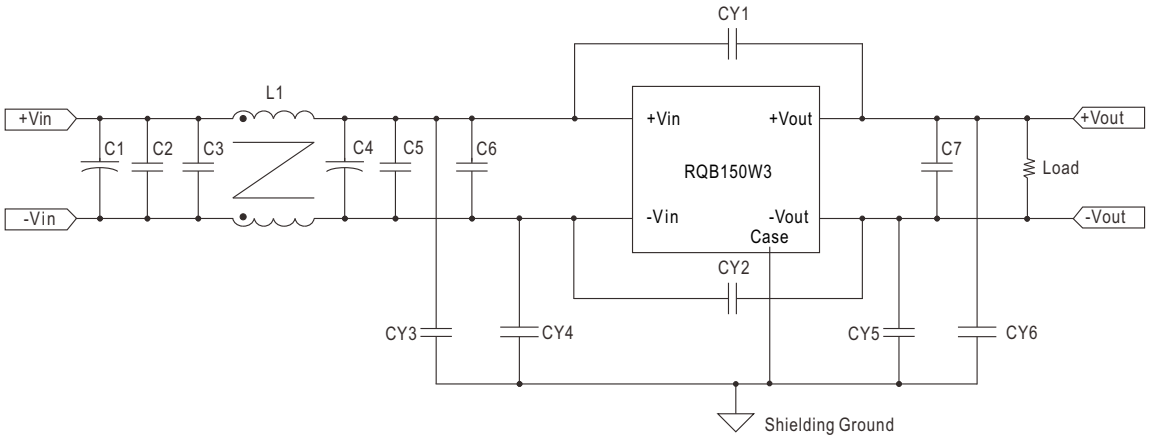

Model No.	BS EN/EN55032 Class A					
	C1,C4	C2,C3,C5,C6	L1	CY1,CY2	CY3,CY4,CY5,CY6	C7
RQB150W3-110S12	100μF	0.68μF	2.0mH	1000pF	1200pF*4	4.7μFx6
RQB150W3-110S24	220μF					
RQB150W3-110S48					1200pF*5	
RQB150W3-110S54						

※ EMI Test standard: BS EN/EN55032 Class B with external circuit. Below figure shows the suggestion circuit for Class B.
(Test Condition: Input Voltage: 110Vdc, Output Load: Full Load)

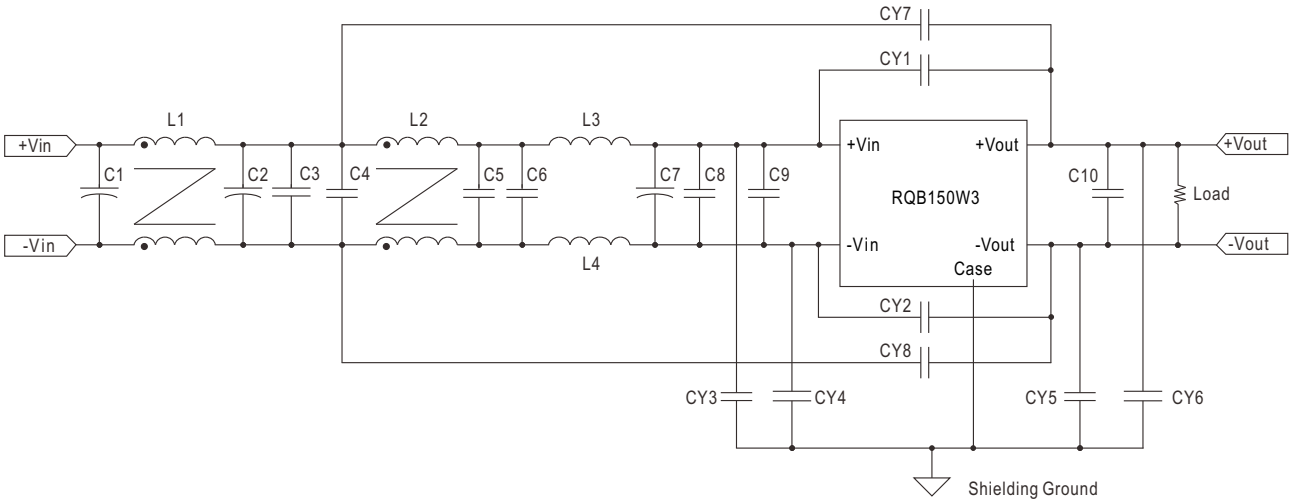

Model No.	BS EN/EN55032 Class B								
	C1,C2,C7	C3,C4,C5,C6,C8,C9	L1,L2	L3,L4	CY1	CY2	CY3,CY4,CY5,CY6	CY7,CY8	C10
RQB150W3-110S12	100μF	0.68μF	2.0mH	4.7μH	2200pF	1000pF	2200pF*4	470pF	4.7μFx6
RQB150W3-110S24							2200pF*6	NA	
RQB150W3-110S48								100pF	
RQB150W3-110S54									

Downloaded from Arrow.com.

■ Packing

Standard Tube Packing	MPQ Per Tube (PCS)	One Tube G.W.	Max. Q'TY/ Carton(PCS)	One Carton G.W.
Unit : mm 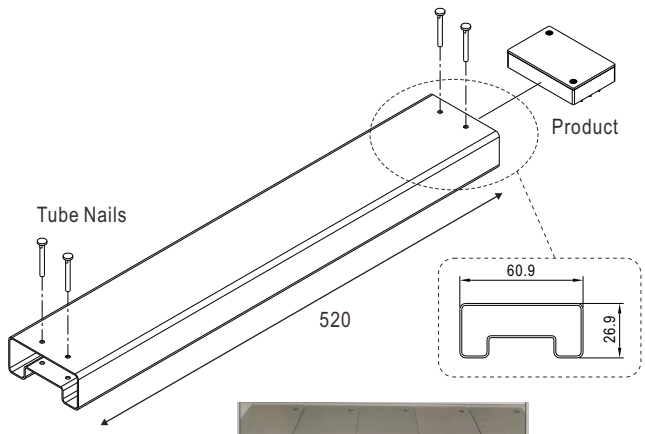 Tube pattern 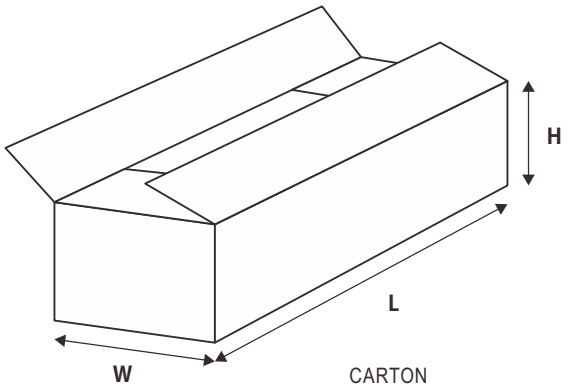 CARTON L545 x W145 x H220	11	900g	132	11.14Kg

■ Installation Manual

Please refer to : http://www.meanwell.com/manual.html

Downloaded from Arrow.com.