IXYS
INTEGRATED CIRCUITS DIVISION

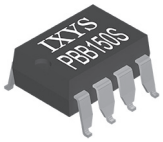

PBB150
250V, 250mA Dual Single-Pole, Normally Closed Relays

Parameter	Ratings	Units
Blockng Voltage	250	V_P
Load Current	250	mA_{rms} / mA_{DC}
On-Resistance (max)	7	Ω

Features
- 3750V_{rms} Input/Output Isolation
- Low Drive Power Requirements
- Greater Reliability than Electromechanical Relays
- No EMI/RFI Generation
- Small 8-Pin Package
- Surface Mount, Tape & Reel Versions Available

Applications
- Telecommunications
- Instrumentation
- Multiplexers
- Data Acquisition
- Electronic Switching
- I/O Subsystems
- Meters (Watt-Hour, Water, Gas)
- Medical Equipment-Patient/Equipment Isolation
- Security
- Industrial Controls

Description
PBB150 is a dual single-pole, normally closed (1-Form-B) solid state relay comprising two independently controlled, optically coupled MOSFET switches that use optically coupled MOSFET technology to provide 3750V_{rms} of input to output isolation.

Its optically coupled outputs, which use the patented OptoMOS architecture, are controlled by a highly efficient infrared LED.

Dual single-pole OptoMOS relays provide a more compact design solution than discrete single-pole relays in a variety of applications by incorporating both relays in a single 8-pin package.

Approvals
- UL Recognized Component: File E76270
- TUV EN 62368-1: Certificate # B 082667 0008

Ordering Information

Part #	Description
PBB150	8-Pin DIP (50/Tube)
PBB150P	8-Pin (Flatpack) (50/Tube)
PBB150PTR	8-Pin (Flatpack) (1000/Reel)
PBB150S	8-Pin Surface Mount (50/Tube)
PBB150STR	8-Pin Surface Mount (1,000/Reel)

Pin Configuration

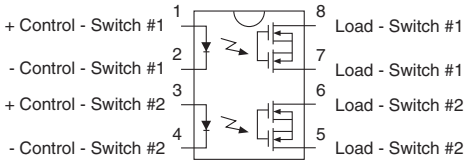

Switching Characteristics of Normally Closed Devices

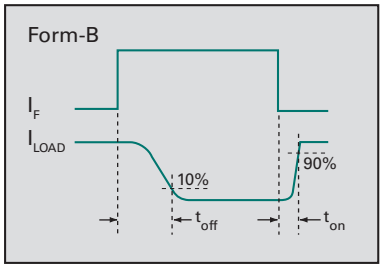

Downloaded from Arrow.com.

Absolute Maximum Ratings @ 25°C

Parameter	Ratings	Units
Blocking Voltage	250	V_P
Reverse Input Voltage	5	V
Input Control Current	50	mA
Peak (10ms)	1	A
Input Power Dissipation [1]	150	mW
Total Power Dissipation [2]	800	mW
Isolation Voltage, Input to Output	3750	V_{rms}
Operational Temperature, Ambient	-40 to +85	°C
Storage Temperature	-40 to +125	°C

[1] Derate linearly 1.33 mW / °C
[2] Derate output power linearly 6.67 mW / °C

Absolute Maximum Ratings are stress ratings. Stresses in excess of these ratings can cause permanent damage to the device. Functional operation of the device at conditions beyond those indicated in the operational sections of this data sheet is not implied.

Typical values are characteristic of the device at +25°C, and are the result of engineering evaluations. They are provided for information purposes only, and are not part of the manufacturing testing requirements.

Electrical Characteristics @ 25°C

Parameter	Conditions	Symbol	Min	Typ	Max	Units
Output Characteristics						
Blocking Voltage	I_L=1µA	V_{DRM}	250	-	-	V_P
Load Current						
Continuous [1]	-	I_L	-	-	250	mA_{rms} / mA_{DC}
Peak	t=10ms	I_{LPK}	-	-	±500	mA_P
On-Resistance [2]	I_L=250mA	R_{ON}	-	-	7	Ω
Off-State Leakage Current	V_L=250V_P	I_{LEAK}	-	-	1	µA
Switching Speeds						
Turn-On	I_F=5mA, V_L=10V	t_{on}	-	-	2.5	ms
Turn-Off		t_{off}	-	-	2.5	
Output Capacitance	I_F=5mA, V_L=50V, f=1MHz	C_{OUT}	-	110	-	pF
Input Characteristics						
Input Control Current to Activate	I_L=250mA	I_F	-	-	5	mA
Input Control Current to Deactivate	-	I_F	0.4	0.7	-	mA
Input Voltage Drop	I_F=5mA	V_F	0.9	1.36	1.5	V
Reverse Input Current	V_R=5V	I_R	-	-	10	µA
Common Characteristics						
Input to Output Capacitance	V_{IO}=0V, f=1MHz	C_{IO}	-	3	-	pF

[1] If both poles operate simultaneously, then the load current must be derated in order not to exceed the package power dissipation value.
[2] Measurement taken within one second of on-time.

Downloaded from Arrow.com.

Manufacturing Information

Moisture Sensitivity

All plastic encapsulated semiconductor packages are susceptible to moisture ingression. IXYS Integrated Circuits classifies its plastic encapsulated devices for moisture sensitivity according to the latest version of the joint industry standard, **IPC/JEDEC J-STD-020**, in force at the time of product evaluation. We test all of our products to the maximum conditions set forth in the standard, and guarantee proper operation of our devices when handled according to the limitations and information in that standard as well as to any limitations set forth in the information or standards referenced below.

Failure to adhere to the warnings or limitations as established by the listed specifications could result in reduced product performance, reduction of operable life, and/or reduction of overall reliability.

This product carries a **Moisture Sensitivity Level (MSL)** classification as shown below, and should be handled according to the requirements of the latest version of the joint industry standard **IPC/JEDEC J-STD-033**.

Device	Moisture Sensitivity Level (MSL) Classification
PBB150S	MSL 1
PBB150P	MSL 3

ESD Sensitivity

This product is ESD Sensitive, and should be handled according to the industry standard **JESD-625**.

Soldering Profile

Provided in the table below is the **IPC/JEDEC J-STD-020** Classification Temperature (T_C) and the maximum total dwell time (t_P) in all reflow processes that the body temperature of these surface mount devices may be (T_C - 5)°C or greater. The device's body temperature must not exceed the Classification Temperature at any time during reflow soldering processes.

Device	Classification Temperature (T_c)	Dwell Time (t_P)	Max Reflow Cycles
PBB150S	250ºC	30 seconds	3
PBB150P	245ºC	30 seconds	3

For through-hole devices, the maximum pin temperature and maximum dwell time through all solder waves is provided in the table below. Dwell time is the interval beginning when the pins are initially immersed into the solder wave until they exit the solder wave. For multiple waves, the dwell time is from entering the first wave until exiting the last wave. During this time, pin temperatures must not exceed the maximum temperature given in the table below. Body temperature of the device must not exceed the limit shown in the table below at any time during the soldering process.

Device	Maximum Pin Temperature	Maximum Body Temperature	Maximum Dwell Time	Wave Cycles
PBB150	260ºC	250ºC	10 seconds*	1

*Total cumulative duration of all waves.

Board Wash

IXYS Integrated Circuits recommends the use of no-clean flux formulations. Board washing to reduce or remove flux residue following the solder reflow process is acceptable provided proper precautions are taken to prevent damage to the device. These precautions include but are not limited to: using a low pressure wash and providing a follow up bake cycle sufficient to remove any moisture trapped within the device due to the washing process. Due to the variability of the wash parameters used to clean the board, determination of the bake temperature and duration necessary to remove the moisture trapped within the package is the responsibility of the user (assembler). Cleaning or drying methods that employ ultrasonic energy may damage the device and should not be used. Additionally, the device must not be exposed to halide flux or solvents.

Downloaded from Arrow.com.

Mechanical Dimensions

PBB150

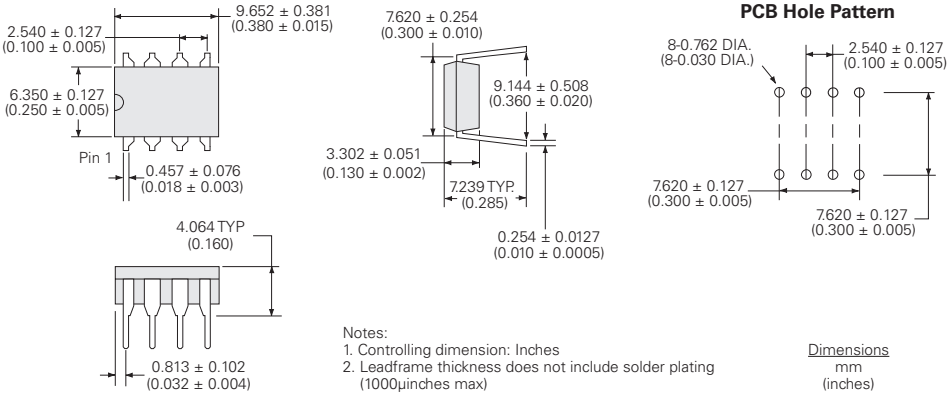

Notes:
1. Controlling dimension: Inches
2. Leadframe thickness does not include solder plating (1000µinches max)

Dimensions
mm
(inches)

PBB150S

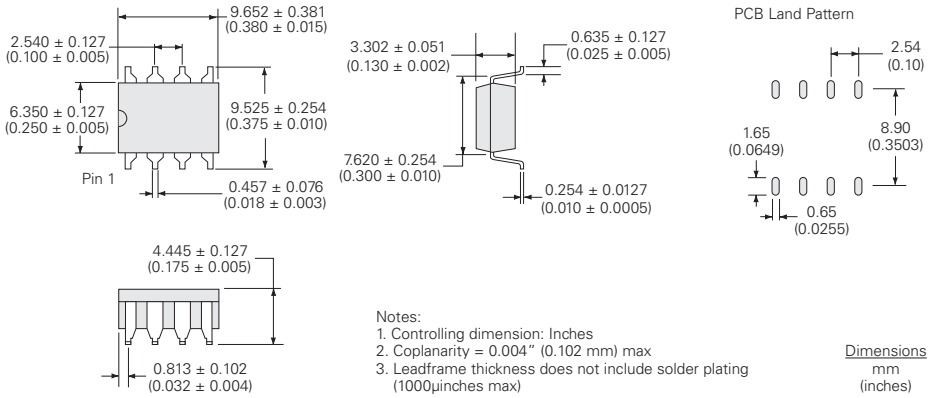

Notes:
1. Controlling dimension: Inches
2. Coplanarity = 0.004" (0.102 mm) max
3. Leadframe thickness does not include solder plating (1000µinches max)

Dimensions
mm
(inches)

PBB150P

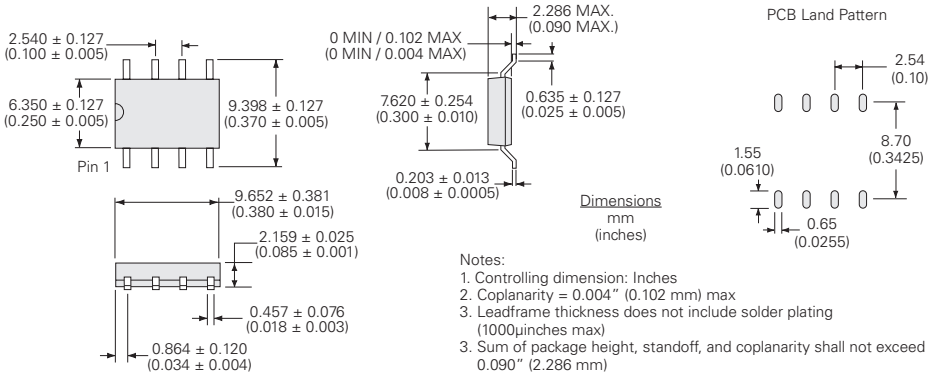

Dimensions
mm
(inches)

Notes:
1. Controlling dimension: Inches
2. Coplanarity = 0.004" (0.102 mm) max
3. Leadframe thickness does not include solder plating (1000µinches max)
3. Sum of package height, standoff, and coplanarity shall not exceed 0.090" (2.286 mm)

Downloaded from Arrow.com.

PBB150STR Tape & Reel

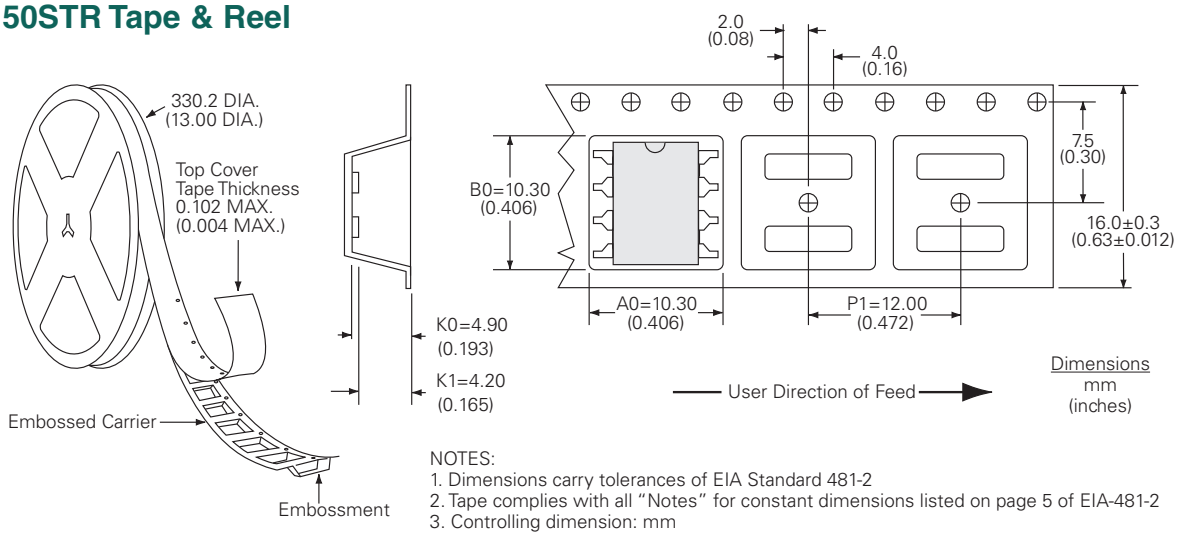

NOTES:
1. Dimensions carry tolerances of EIA Standard 481-2
2. Tape complies with all "Notes" for constant dimensions listed on page 5 of EIA-481-2
3. Controlling dimension: mm

PBB150PTR Tape & Reel

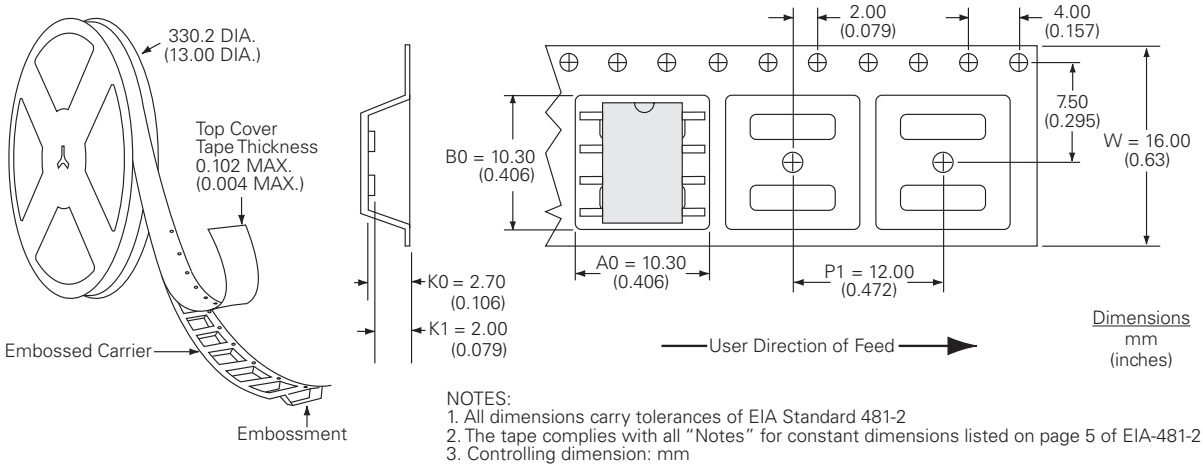

NOTES:
1. All dimensions carry tolerances of EIA Standard 481-2
2. The tape complies with all "Notes" for constant dimensions listed on page 5 of EIA-481-2
3. Controlling dimension: mm

For additional information please visit our website at: https://www.ixysic.com

IXYS
A Littelfuse Technology

Disclaimer Notice - Information furnished is believed to be accurate and reliable. However, users should independently evaluate the suitability of and test each product selected for their own applications. Littelfuse products are not designed for, and may not be used in, all applications.
Read complete Disclaimer Notice at https://www.littelfuse.com/disclaimer-electronics.

Specification: DS-PBB150-R09
©Copyright 2025, Littelfuse, Inc.
OptoMOS® is a registered trademark of Littelfuse, Inc.
All rights reserved. Printed in USA.
11/18/2025

Downloaded from Arrow.com.