THIS DRAWING IS UNPUBLISHED. RELEASED FOR PUBLICATION 20
© COPYRIGHT 20 BY - ALL RIGHTS RESERVED.

AS SHOWN 1-2271454-6

REVISIONS					
P	LTR	DESCRIPTION	DATE	DWN	APVD
	B	REVISED	25JUN2018	K.T	E.I
	C	REVISED PER ECR-19-016272	21OCT2019	T.S	E.I
	D	REVISED	02JUL2020	RI	EI

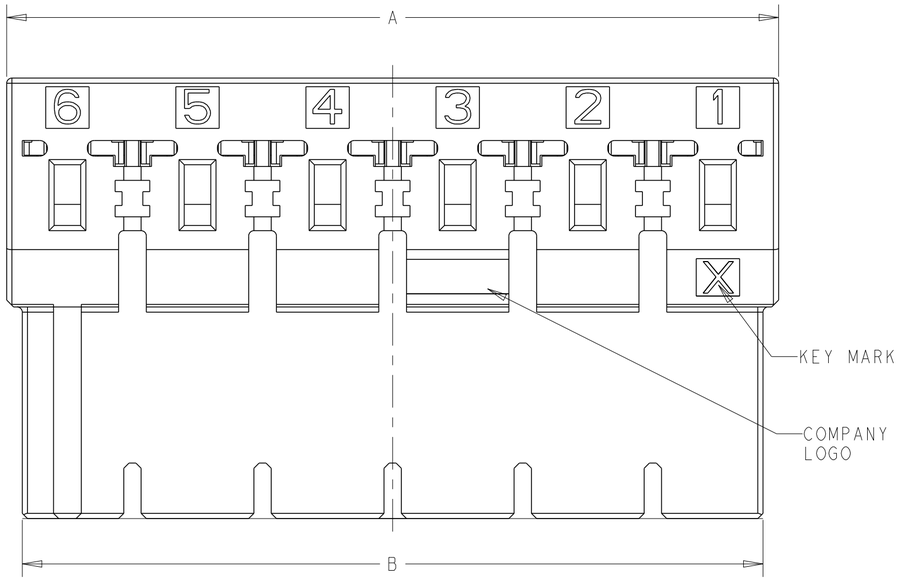

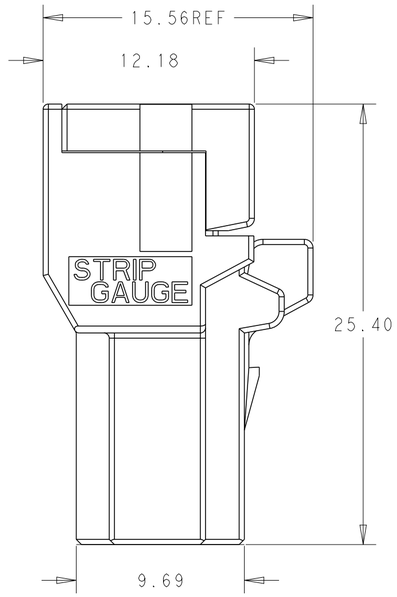

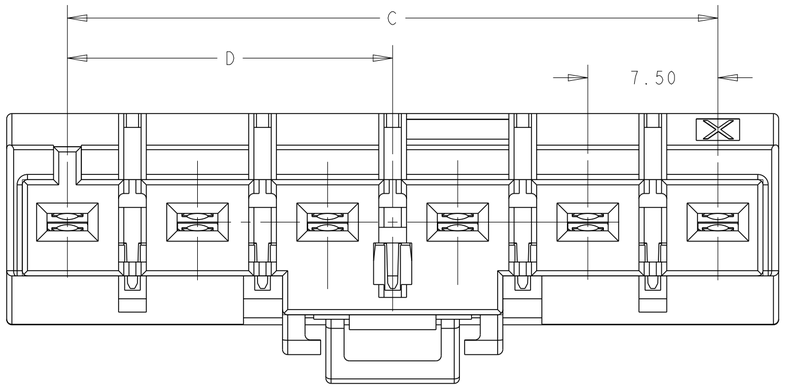

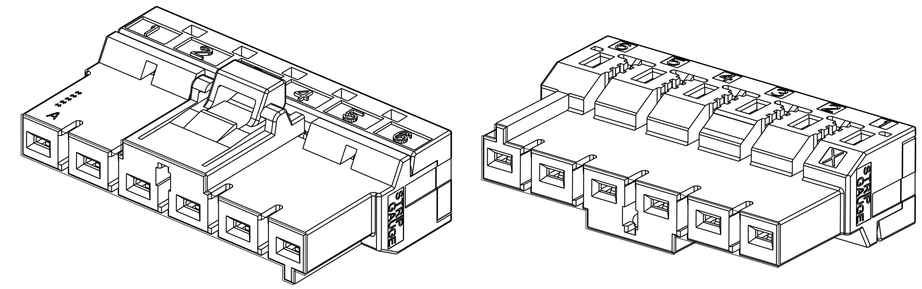

1-2271454-6

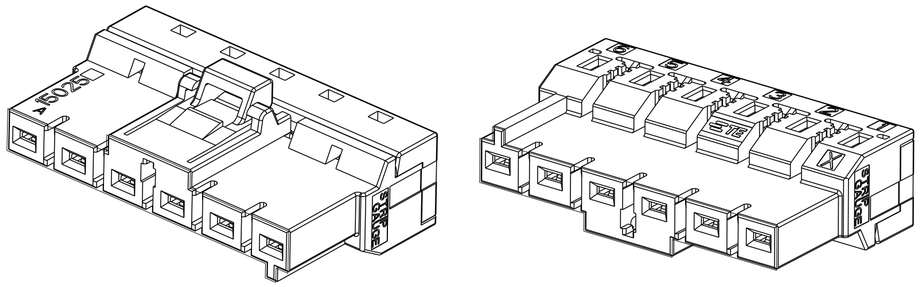

2271454-6

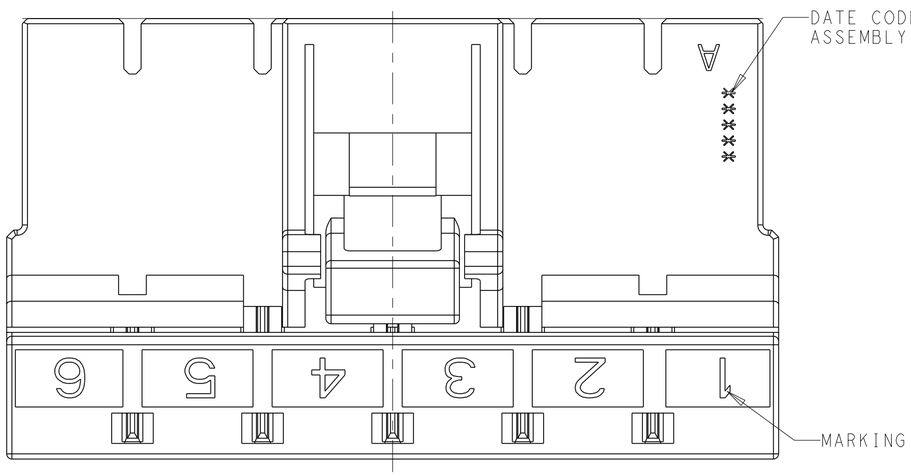

1. NOTE DELETED
2. RATED VOLTAGE:600VAC,
3. APPLICATION CABLE:22AWG~14AWG
4. OPERATION TEMPERATURE:-30°C~105°C
5. CONTACT RESISTANCE:10mΩ MAX.INITIAL
6. INSULATION RESISTACE:1000MΩ MIN.INITIAL
7. NOTE DELETED

X	W/O	6PIN	18.75	37.50	42.70	44.50	2271454-6
X	WITH	6PIN	18.75	37.50	42.70	44.50	1-2271454-6
KEY MARK	MARKING	PINS	DIM.D	DIM.C	DIM.B	DIM.A	ASSEMBLY P/N

THIS DRAWING IS A CONTROLLED DOCUMENT.

DIMENSIONS: mm

TOLERANCES UNLESS OTHERWISE SPECIFIED:
0 PLC ±-
1 PLC ±0.50
2 PLC ±0.30
3 PLC ±-
4 PLC ±-
ANGLES ±-

MATERIAL -
FINISH -

DWN Ning Wang 08JAN2015
CHK Kobby Zhao 08JAN2015
APVD Xiang Xu 08JAN2015
PRODUCT SPEC 108-78997
APPLICATION SPEC 411-78272
WEIGHT -

TE Connectivity

NAME DYNAMIC D3950 RECEPTACLE ASSEMBLY -

SIZE A2 | CAGE CODE - | DRAWING NO C-2271454 | RESTRICTED TO -

Customer Drawing | SCALE 2:1 | SHEET 1 OF 1 | REV D

1471-9 (3/13)

Downloaded from Arrow.com.