Honeywell

GLOBAL SAFETY SWITCH

CATALOGUE LISTING CHART NO.

MTG-GS-269

DO NOT SCALE PRINT

MTG-GS-269

REPLACES

DR/202

DRAWING NUMBER

1

ISSUE

RELEASE NUMBER

REVISIONS

FIGURE 1

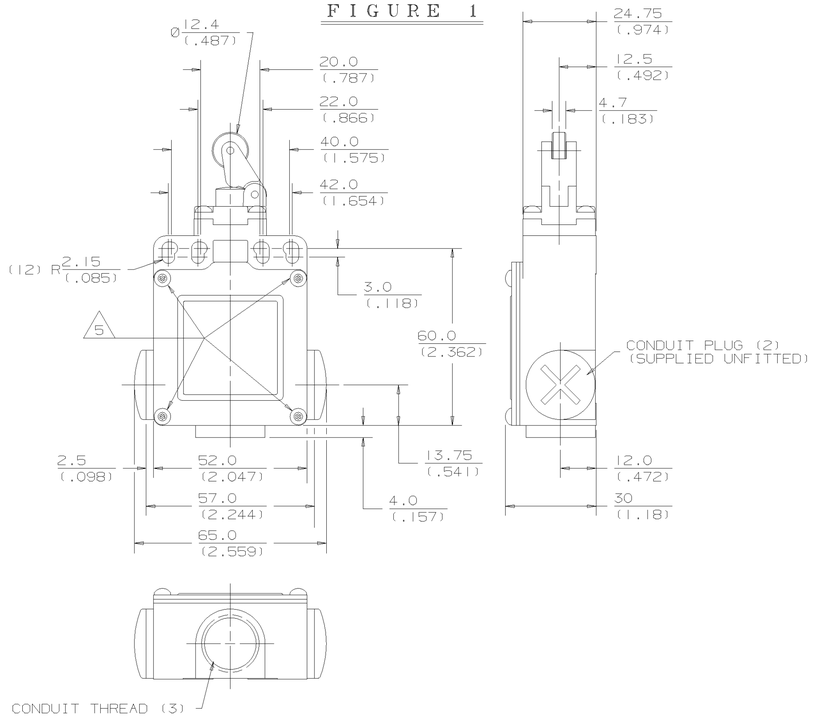

FIGURE 3

BASIC SWITCH	CONTACT BLOCK DIAGRAM	OPERATING FORCE MAX N / LBS	DISCONNECT FORCE MAX N / LBS
01 / 07	SNAP ACTION, SINGLE POLE (13, 14, Zb, 21, 22)	10 / 2.2	13 / 3.0
03 / 33	SLOW ACTION BREAK BEFORE MAKE (21, 22, Zb, 13, 14)	9 / 2.0	16 / 3.6
04 / 34	SLOW ACTION MAKE BEFORE BREAK (21, 22, Zb, 13, 14)	10 / 2.2	17 / 3.8
06 / 36	SLOW ACTION 2 NORMALLY CLOSED (21, 22, 2Y, 11, 12)	8 / 1.8	13 / 3.0
24 / 32	SNAP ACTION, DOUBLE POLE (13, 14, 11, 12, 23, 24, 21, 22)	3.2 / 0.72	6 / 1.35

CAM ACTUATION PER EN50041

NOMINAL TRAVELS AND RELATED TERMINALS
▬ - CONTACT CLOSED ▭ - CONTACT OPEN ▨ - CONTACT CLOSED
DIFFERENTIAL TRAVEL, ** POSITIVE OPENING TO IEC 947-5-1
DIMENSIONS IN mm

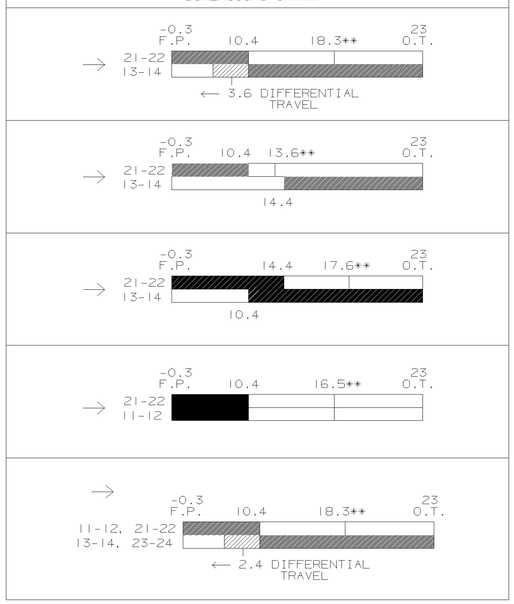

PIN ACTUATION

NOMINAL TRAVELS AND RELATED TERMINALS
▬ - CONTACT CLOSED ▭ - CONTACT OPEN ▨ - CONTACT CLOSED
DIFFERENTIAL TRAVEL, ** POSITIVE OPENING TO IEC 947-5-1
DIMENSIONS IN mm

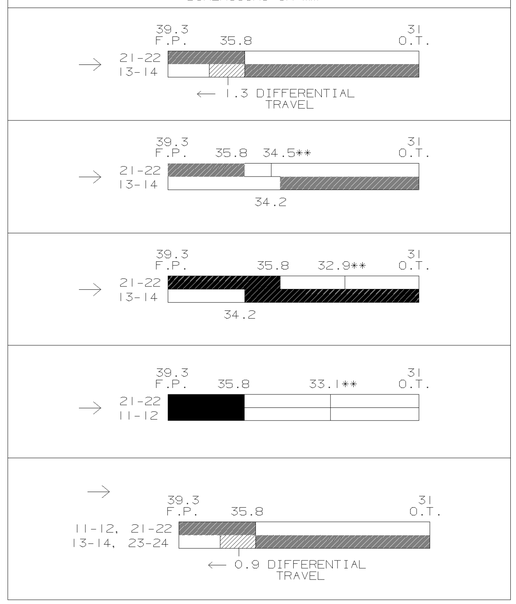

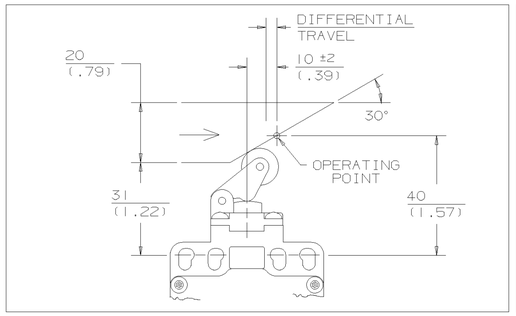

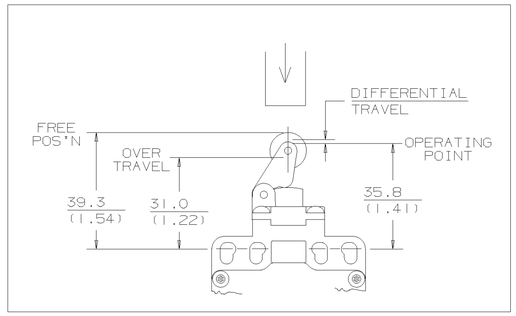

MIN. OPERATING VELOCITY	= 1.0mm/S (.04in/S)
MAX. OPERATING VELOCITY	= 100mm/S (3.9in/S)
MAX. OPERATING FREQUENCY	= 250 OPS/MINUTE

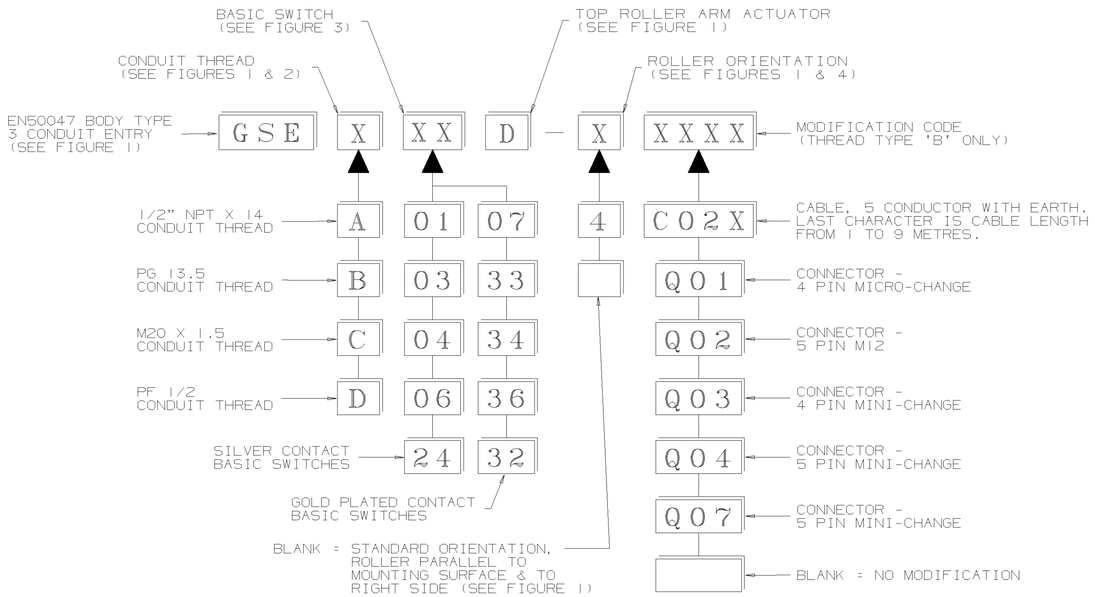

NOTES:-

1. RED EPOXY PAINT FINISHED ZINC DIE-CAST BODY AND STEEL COVER. BLACK EPOXY PAINT FINISHED ZINC DIE-CAST HEAD.
2. FREE POSITION (F.P.), OPERATING POINT, OVERTRAVEL (O.T.) AND PRETRAVEL ALL TO EN50047.
3. ANY STANDARD LISTING WITH SUFFIX 'RS' OR 'FE' IS PERMITTED.
4. FOR CONNECTION DIAGRAMS AND ADDITIONAL ELECTRICAL, DIMENSIONAL AND ENVIRONMENTAL INFORMATION REFER TO DRAWING GL-49212.
5. MAXIMUM TIGHTENING TORQUE FOR FIXING SCREWS = 0.5 Nm (4.4 in lb).
6. HEAD AND COVER FIXED WITH TORX® SOCKET HEAD SCREWS (DRIVER SUPPLIED).

FIGURE 4

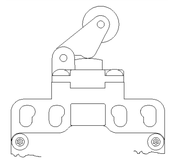

HEAD ORIENTATION WITH ROLLER PARALLEL TO MOUNTING SURFACE AND TO LEFT SIDE

4

FIGURE 2

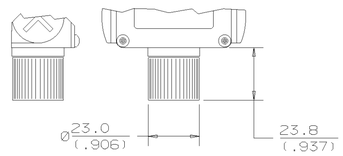

1/2" NPT X 14 CONDUIT THREAD ADAPTER

A

ELECTRICAL RATING				ENVIRONMENTAL	APPROVALS
SILVER CONTACTS					
AC		DC			
A300 Ue	AC15 Ie	Q300 Ue	DC13 Ie		
VOLTS	AMPS	VOLTS	AMPS		
120	6	125	0.55		
240	3	250	0.27		
GOLD PLATED CONTACTS: I_{th} = 10A; 1V 10μA MIN.; 50V 100mA MAX.				IP66 NEMA 1, 4, 12, 13 TEMP RANGE : -25°C TO 85°C / -13°F TO 185°F STORAGE : -40°C TO 85°C / -40°F TO 185°F SHOCK : 50G PER IEC 68-2-27 VIBRATION : 10G PER IEC 68-2-6	IEC 947-5-1 EN50047

NO CHANGES CAN BE MADE TO THIS DRAWING WITHOUT JOINT NEWHOUSE/FREEPORT APPROVAL

DRAWN I. WEIR 12/98

CHECK

DESIGN

AUTHOR'N

THE COPYRIGHT OF THIS DRAWING IS THE PROPERTY OF HONEYWELL LTD. THE DRAWING IS SUPPLIED IN CONFIDENCE AND MUST NOT BE USED FOR ANY PURPOSE OTHER THAN THAT FOR WHICH IT IS SUPPLIED.

THIRD ANGLE PROJECTION

SCALE:- 1/1

DIMENSIONS ARE IN MM (INCHES)

MODIFY ON CAD SYSTEM ONLY

Downloaded from Arrow.com.