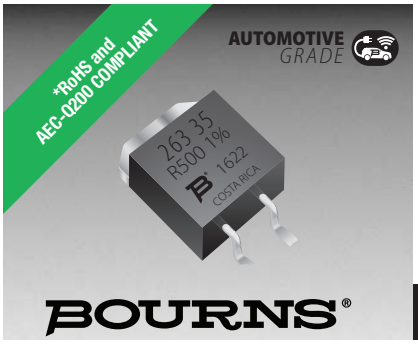

Features

- D²PAK housing
- Low inductance
- Resistor electrically isolated from the backplate
- High power rating
- Compatible with lead free solder reflow temperatures
- RoHS compliant*
- AEC-Q200 compliant

PWR263S-35 Series Power Resistor

General Information

Bourns® PWR263S-35 Series is a TO263 DPAK style power resistor. Manufactured using thick film on alumina ceramic technology, it is used in current measurement, snubber, bleeder and discharge circuits.

Electrical & Thermal Characteristics

Parameter	Value(s)
Resistance (See Popular Resistance Values table)	0.02 Ω to 130 KΩ
Power Rating @ 25 ˚C Case Temperature	35 W
Tolerance	±1 %**, ±5 %
TCR 0.02 Ω<R<130.0K Ω	±100 PPM/˚C
Thermal Resistance - R_{thj}	3.7 ˚C/W
Inductance	0.1 μH maximum
Operating Voltage	√P*R with a maximum of 250 V
Dielectric Strength	2 KV AC
Insulation Resistance	10 GΩ
Operating Temperature	-55 ˚C to 155 ˚C

** Available for most values. Check Popular Resistance Values table.

Reliability Characteristics

Parameter	Specification
Short Term Overload (2x Pr for R < 2 Ω, 1.6 x Pr for R ≥ 2 Ω, V < 1.5 x Operating Voltage)	ΔR ±0.25 %
Load Life (1000 hours at rated power)	ΔR ±1.0 %
Thermal Shock (-55 ˚C to 155 ˚C, 5 cycles)	ΔR ±0.5 %
Resistance to Soldering Heat (10 sec. at 270 ˚C)	ΔR ±0.5 %
Vibration (20 G 10-2000 Hz .06 " D.A.)	ΔR ±0.25 %
Moisture Sensitivity Level	1

Derating Curve

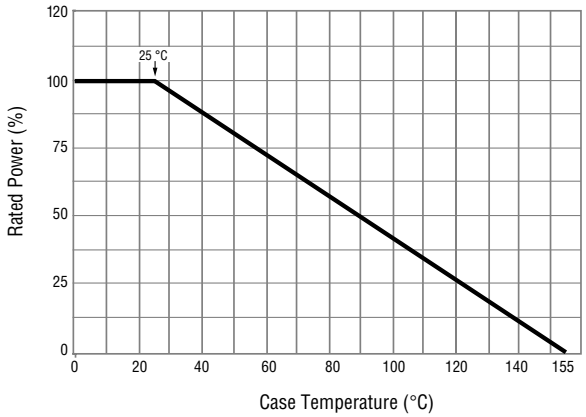

WARNING Cancer and Reproductive Harm - www.P65Warnings.ca.gov

Material Characteristics

Resistor ..... Thick film
Substrate ..... Alumina (AL203)
Housing ..... Epoxy
Pins..... Tinned Copper (Sn/Cu)
Flammability ..... Conforms to UL-94V0

Popular Resistance Values

Code	Resistance Value	Code	Resistance Value
R020	0.02 Ω***	1000	100 Ω
R025	0.025 Ω***	1200	120 Ω
R030	0.03 Ω***	1500	150 Ω
R033	0.033 Ω***	2000	200 Ω
R040	0.04 Ω***	2500	250 Ω
R050	0.05 Ω***	3000	300 Ω
R075	0.075 Ω***	3300	330 Ω
R100	0.1 Ω	4000	400 Ω
R150	0.15 Ω	4700	470 Ω
R200	0.2 Ω	5000	500 Ω
R250	0.25 Ω	5600	560 Ω
R300	0.3 Ω	7500	750 Ω
R330	0.33 Ω	1001	1.0 KΩ
R400	0.4 Ω	1501	1.5 KΩ
R500	0.5 Ω	2001	2.0 KΩ
R750	0.75 Ω	2501	2.5 KΩ
1R00	1 Ω	3001	3.0 KΩ
1R50	1.5 Ω	3301	3.3 KΩ
2R00	2 Ω	4001	4.0 KΩ
2R50	2.5 Ω	5001	5.0 KΩ
3R00	3 Ω	7501	7.5 KΩ
3R30	3.3 Ω	1002	10 KΩ
4R00	4 Ω	1502	15 KΩ
5R00	5 Ω	2002	20 KΩ
7R50	7.5 Ω	2502	25 KΩ
8R00	8 Ω	3002	30 KΩ
10R0	10 Ω	3302	33 KΩ
12R0	12 Ω	4002	40 KΩ
15R0	15 Ω	4702	47 KΩ
20R0	20 Ω	5002	50 KΩ
25R0	25 Ω	5602	56 KΩ
27R0	27 Ω	6802	68 KΩ
30R0	30 Ω	7502	75 KΩ
33R0	33 Ω	8202	82 KΩ
40R0	40 Ω	1003	100 KΩ
47R0	47 Ω	1153	115 KΩ
50R0	50 Ω	1203	120 KΩ
56R0	56 Ω	1253	125 KΩ
75R0	75 Ω	1303	130 KΩ

*** 5 % Tolerance

*RoHS Directive 2015/863, Mar 31, 2015 and Annex.
Specifications are subject to change without notice.
Users should verify actual device performance in their specific applications.
The products described herein and this document are subject to specific legal disclaimers as set forth on the last page of this document, and at www.bourns.com/docs/legal/disclaimer.pdf.

Downloaded from Arrow.com.

PWR263S-35 Series Power Resistor

BOURNS®

Product Dimensions

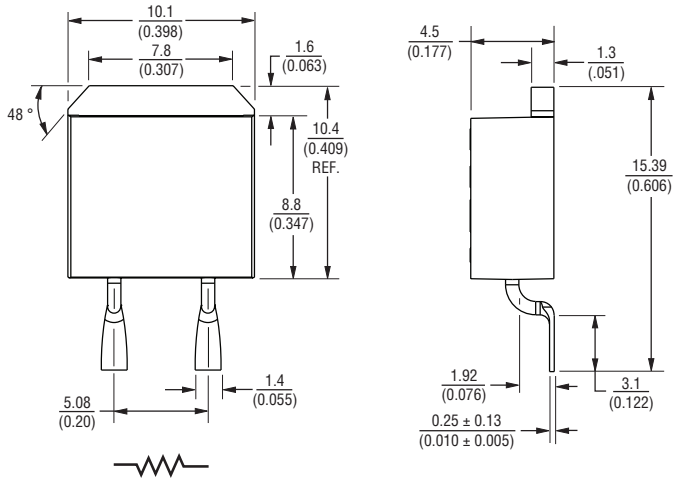

DIMENSIONS: MM (INCHES)

TOLERANCE: ±0.38 (±0.015) UNLESS OTHERWISE NOTED

LEAD COPLANARITY: 0.102 (0.004) MAX AT MOUNTING SURFACE

Recommended Pad Layout

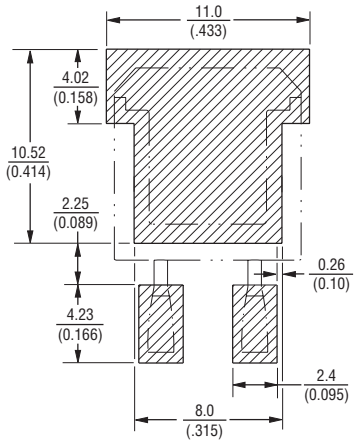

Typical Part Marking

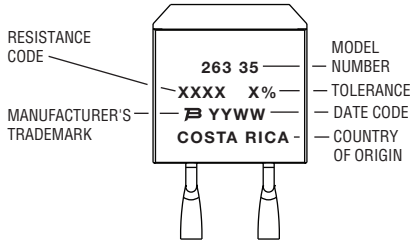

Soldering Profile

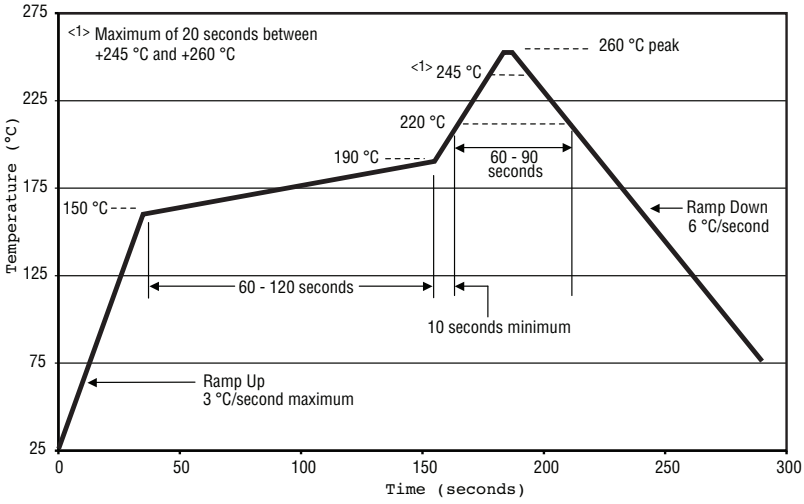

Power dissipation is 3.5 W at an ambient temperature of 25 ˚C when mounted on a double-sided copper board using FR4 standard, 70 μm of copper, 39 x 30 x 1.6 mm.

How to Order

PWR 263 S - 35 - 10R0 F E

Model
- PWR = Power Resistor

Package
- 263 = D²PAK

Pin Style
- S = Surface Mount

Power
- 35 = 35 W

Resistance Value
- <100 ohms ... "R" represents decimal point (examples: 7R50 = 7.5 Ω; R500 = 0.5 Ω)
- ≥100 ohms.... First three digits are significant, fourth digit represents number of zeros to follow (examples: 2000 = 200 ohms; 3002 = 30K ohms)

Absolute Tolerance
- J = 5 %
- F = 1 %

Packaging
- E = Tape & Reel
- Blank = Tubes

Specifications are subject to change without notice.
Users should verify actual device performance in their specific applications.
The products described herein and this document are subject to specific legal disclaimers as set forth on the last page of this document, and at www.bourns.com/docs/legal/disclaimer.pdf.

Downloaded from Arrow.com.

Pulse Power Rating

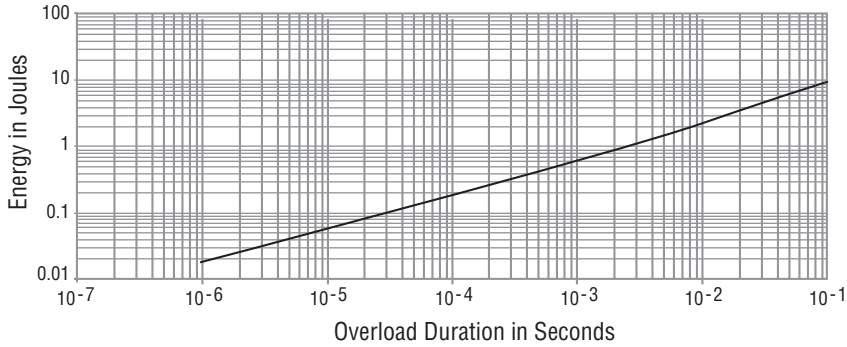

The energy absorbed by the resistor expressed in Joules can be calculated by multiplying the peak power of the pulse in watts times the length of the pulse in seconds.

The energy should not exceed the limits shown in the graph. The overload voltage should not exceed 1.5 times the maximum operating voltage.

Packaging Specifications

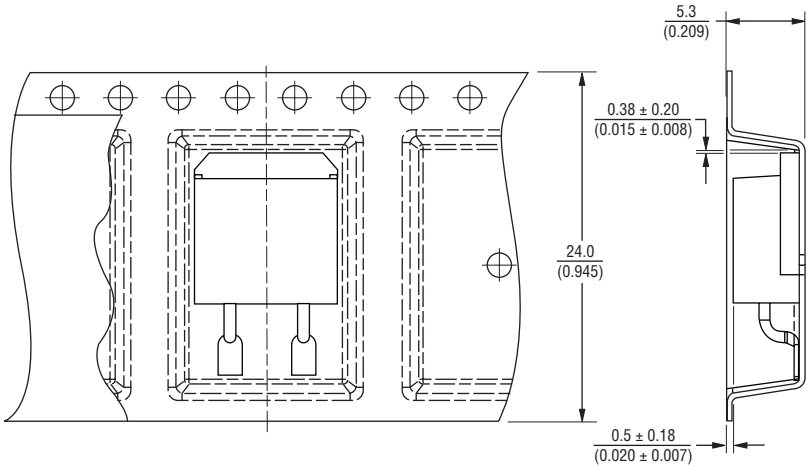

DIMENSIONS: MM (INCHES)

TOLERANCE: ±0.38 (±0.015) UNLESS OTHERWISE NOTED

Asia-Pacific: Tel: +886-2 2562-4117 • Email: asiacus@bourns.com
EMEA: Tel: +36 88 885 877 • Email: eurocus@bourns.com
The Americas: Tel: +1-951 781-5500 • Email: americus@bourns.com
www.bourns.com

REV. 12/20

Specifications are subject to change without notice.
Users should verify actual device performance in their specific applications.
The products described herein and this document are subject to specific legal disclaimers as set forth on the last page of this document, and at www.bourns.com/docs/legal/disclaimer.pdf.

Downloaded from Arrow.com.

Legal Disclaimer Notice

BOURNS®

This legal disclaimer applies to purchasers and users of Bourns® products manufactured by or on behalf of Bourns, Inc. and its affiliates (collectively, "Bourns").

Unless otherwise expressly indicated in writing, Bourns® products and data sheets relating thereto are subject to change without notice. Users should check for and obtain the latest relevant information and verify that such information is current and complete before placing orders for Bourns® products.

The characteristics and parameters of a Bourns® product set forth in its data sheet are based on laboratory conditions, and statements regarding the suitability of products for certain "typical" applications are based on Bourns' knowledge of typical requirements in generic applications. Bourns assumes that "typical" applications include failsafe/backup features to address critical risks to users and are designed to allow rework of Bourns® product to avoid scrap of a device solely due to malfunctioning Bourns® product. The characteristics and parameters of a Bourns® product in a user application may vary from the data sheet characteristics and parameters due to (i) the combination of the Bourns® product with other components in the user's application, or (ii) the environment of the user application itself. The characteristics and parameters of a Bourns® product also can and do vary in different applications and actual performance may vary over time. Thus, users should always verify the actual performance of the Bourns® product in their specific devices and applications and make their own independent judgments regarding the suitability of Bourns® product and the amount of additional test margin to design into their device or application to compensate for differences between laboratory and real-world conditions.

Unless Bourns has explicitly designated an individual Bourns® product as meeting the requirements of a particular industry standard (e.g., IATF 16949) or a particular qualification (e.g., UL listed or recognized), Bourns is not responsible for any failure of an individual Bourns® product to meet the requirements of such industry standard or particular qualification even if such industry standard or qualification is a "state of art". Users of Bourns® products are responsible for ensuring compliance with safety-related requirements and standards applicable to their devices or applications.

Bourns® products are not recommended, authorized or intended for use in applications where failure or malfunction may result in personal injury, death, or severe property or environmental damage, such as without limitation nuclear, life-critical medical and certain automotive and aviation applications. Except as set forth in the bullet points below or unless expressly and specifically approved in writing on a case-by-case basis by an authorized Bourns' representative, use of any Bourns® products in such unauthorized high-risk applications is at the user's sole risk.

- Bourns considers implantable/invasive devices and devices/procedures designed as life-supporting or life-sustaining by the U.S. Food and Drug Administration or equivalent organizations outside of the United States as "life-critical" medical applications. Bourns expressly identifies those Bourns® standard products that are suitable for use in typical medical applications that are not life-critical in its publication entitled "Bourns Medical Grade Component Guide."

- Bourns expressly identifies those Bourns® standard products that are suitable for use in typical automotive applications associated with any Automate Safety Integrity Level (ASIL) in its publication entitled "Bourns Automotive Grade Component Guide." Bourns' designation of Bourns® product as compliant with the AEC-Q standard does not by itself mean that Bourns has approved such product for use in an automotive application.

- Bourns expressly identifies Bourns® standard products that are suitable for use in the typical aviation applications/systems requiring System Design Assurance Level (RTCA DO-254 DAL) of C, D or E in its publication entitled "Bourns Civilian Aerospace/Aviation Grade Component Guide." Bourns does not test its products for compliance with United States Federal Aviation Administration standards or any other generally equivalent governmental organization standard applicable to products designed or manufactured for use in aviation applications. Use of Bourns® standard components in aviation applications associated with RTCA DO-254 DAL A or B without proper approval noted above shall be at the user's sole risk.

- Bourns will review and authorize on a case-by-case basis the use of Bourns® standard products which are at least AEC-Q compliant in space-related civil applications (rockets, satellites) with a negotiated cross-waiver and indemnity agreement.

The use and level of testing applicable to Bourns® custom products shall be negotiated on a case-by-case basis by Bourns and the user for which such Bourns® custom products are specially designed. Absent a written agreement between Bourns and the user regarding the use and level of such testing, the above provisions applicable to Bourns® standard products shall also apply to such Bourns® custom products.

Use of Bourns® products or Bourns' technology in military/defense applications must be reviewed with Bourns for compliance with applicable export control laws and embargoes. Users shall not sell, transfer, export or re-export (which includes transfers within a country) any Bourns® products or technology or technical data for use in activities which involve the design, development, production, use or stockpiling of nuclear, chemical or biological weapons or missiles, nor shall they use Bourns® products or technology or technical data in any facility which engages in activities relating to such devices. Further, Bourns® products and Bourns' technology and technical data may not under any circumstance be exported or re-exported to countries subject to international sanctions or embargoes. Bourns® products and technology may not, without prior authorization from Bourns and/or the Government of a country where such product/technology is designed and/or manufactured, be resold, transferred, or re-exported (including within the same country) to any party not eligible to receive commodities, software, and technical data originating in such country.

To the maximum extent permitted by applicable law, Bourns disclaims (i) any and all liability for special, punitive, consequential, incidental or indirect damages or lost revenues or lost profits, and (ii) any and all implied warranties (those not based on parameters specified in Bourns' data sheets and/or specifications), including implied warranties of fitness for particular purpose, non-infringement and merchantability.

For your convenience, copies of this Legal Disclaimer Notice with German, Spanish, Japanese, Traditional Chinese and Simplified Chinese bilingual versions are available at:

Web Page: https://www.bourns.com/legal/disclaimers-terms-and-policies
PDF: https://www.bourns.com/docs/Legal/disclaimer.pdf

Downloaded from Arrow.com.