BT53 Datasheet

Amp'ed RF Technology, Inc.

Downloaded from Arrow.com.

BT53 Product Specification

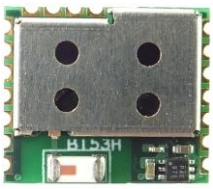

13.5mm x 11.6mm x 2.6mm

Description

Amp'ed RF Technology presents the BT53 Smart Ready Bluetooth module supporting v5.1 Bluetooth Low Energy and Classic; dual mode. Including an integrated antenna, the BT53 provides a complete ready-to-use RF platform.

The BT53 is a surface mount PCB module, with pre-tested RF regulatory certifications improving time to market and reliability.

Fully integrated with our AmpedUP embedded protocol stack, the BT53 comes standard with our abSerial AT command interface and SPP profile. Many other profiles are available upon request.

Bluetooth features

- FCC & Bluetooth licensed radio
- Bluetooth v5.1
- Class 1 radio
- Range up to 80m LOS
- 1.5Mbps data throughput
- 128-bit encryption security

Hardware configuration

- Cortex-M4 microprocessor up to 84MHz
- 256K bytes Flash memory
- 64K bytes RAM memory
- UART, up to 2M baud
- SPI and I2C interfaces
- 7 general purpose I/O
- 4x12-bit A/D inputs
- 1 LPO input

Embedded software

- AmpedUP dual mode Bluetooth stack: BT Classic and BT Low Energy
- abSerial, AT command set
- SDK, Software Development Kit (Optional)
- BlueGuard, data encryption software (Optional)
- Mobile application software (Optional)

Additional documentation

- abSerial User Guide
- abSerial Reference Guide
- abSerial Configuration Guide

Downloaded from Arrow.com.

Table of Contents

1. Software Architecture 4

1.1. Lower Layer Stack 4
1.2. Upper Layer Stack: Amp'ed UP 4
1.3. HCI Interface 4
1.4. AT Command Set: abSerial 4

2. Hardware Specifications 6

2.1. Recommended Operating Conditions 6
2.2. Absolute Maximum Ratings 6
2.3. Current Consumption (BT53H/BT53S) 6
2.4. Current Consumption (BT53i) 7
2.5. Selected RF Characteristics 7
2.6. I/O Operating Characteristics 8
2.7. Pin Assignment 9
2.8. Pin Placement Diagram (Top View) 10
2.9. Layout Drawing 11

3. Module Block Diagram 11

4. Hardware Design 12

4.1. Module Reflow Installation 12
4.2. GPIO Interface 12
4.3. UART Interface 13
4.4. PCB Layout Guidelines 14
4.5. Reset Circuit 14
4.6. External LPO Input Circuit 16
4.7. Audio Application Reference Design 17
4.8. UART level shifter for 3.3V system 20

5. Regulatory Compliance 20

5.1. Modular Approval, FCC and IC 21
5.2. FCC Label Instructions 22
5.3. CE 22
5.4. Bluetooth Qualification 22

6. Ordering Information 22

7. Feature Comparison 23

8. Revision History 23

Downloaded from Arrow.com.

1. Software Architecture

1.1. Lower Layer Stack

- Bluetooth v4.1, Classic and Low Energy
- Device power modes: active, sleep and deep sleep
- Wake on Bluetooth feature optimized power consumption of host CPU
- Authentication and encryption
- Encryption key length from 8 to 128 bits
- Persistent FLASH memory for BD Address and user parameter storage
- All ACL packet types.
- Bluetooth test modes per Bluetooth specification
- 802.11b/g/n co-existence: AFH
- Vendor specific HCI commands to support device configuration and certification test modes

1.2. Upper Layer Stack: Amp'ed UP

- SPP, GAP, ATT, GATT
- RFComm, SDP, and L2CAP

1.3. HCI Interface

- Bluetooth v5.1 specification compliant
- HCI UART transport layer (H4)

1.4. AT Command Set: abSerial

- Please see *abSerial Reference Guide* for details

Downloaded from Arrow.com.

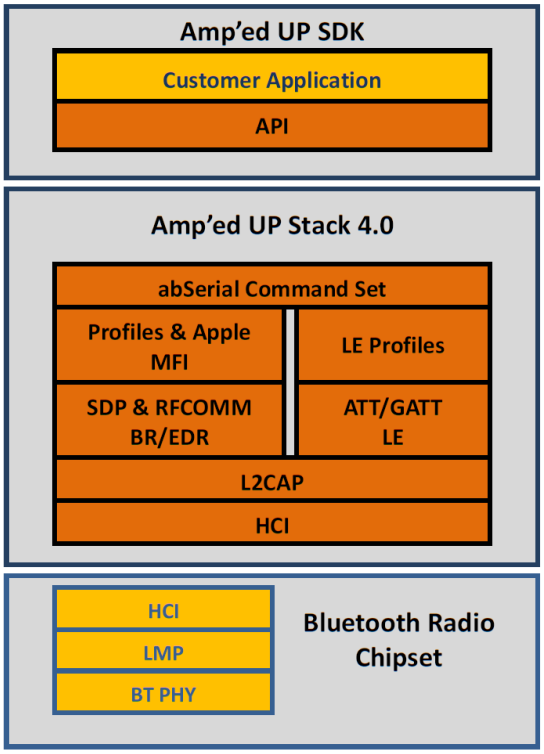

Downloaded from Arrow.com.

2. Hardware Specifications

General Conditions (V_{IN}= 2.5V and 25°C)

2.1. Recommended Operating Conditions

Rating	Min	Typical	Max	Unit
Operating Temperature Range	-40	-	85	°C
Supply Voltage V_{IN}	2.2	2.5	4.8	Volts
Signal Pin Voltage	-	1.9	-	Volts
RF Frequency	2400	-	2483.5	MHz

2.2. Absolute Maximum Ratings

Rating	Min	Typical	Max	Unit
Storage temperature range	-55	-	+150	°C
Supply voltage V_{IN}	-0.3	-	+5.0	Volts
I/O pin voltage V_{IO}	-0.3	-	+5.5	Volts
RF input power	-	-	-5	dBm

2.3. Current Consumption (BT53H/BT53S)

CPU Speed: 8 MHz

- UART supports up to 115 Kbps
- Data throughput up to 200 Kbps
- abSerial v1.7 (firmware)
- Shallow Sleep enabled

Modes (Typical Power Consumption)	Avg	Unit
ACL data 115K Baud UART at max throughput (Master)	16.5	mA
ACL data 115K Baud UART at max throughput (Slave)	18.5	mA
Connection, no data traffic, master	5.2	mA
Connection, no data traffic, slave	7.4	mA
Connection, 375ms sniff, slave	590	µA
Standby, without deep sleep	4.9	mA
Standby, with deep sleep	140	uA
Page/Inquiry Scan, with deep sleep	720	µA
BLE Advertising, 1.28s, non-connectable	195	µA
BLE Advertising, 1.28s, discoverable	215	µA

Downloaded from Arrow.com.

2.4. Current Consumption (BT53i)

CPU Speed: 8 MHz

- UART supports up to 115 Kbps
- Data throughput up to 200 Kbps
- abSerial v1.7 (firmware)
- Shallow Sleep enabled

Modes (Typical Power Consumption)	Avg	Unit
ACL data 115K Baud UART at max throughput (Master)	16.5	mA
ACL data 115K Baud UART at max throughput (Slave)	18.5	mA
Connection, no data traffic, master	5.3	mA
Connection, no data traffic, slave	7.5	mA
Connection, 375ms sniff, slave	640	µA
Standby, without deep sleep	5.0	mA
Standby, with deep sleep	180	uA
Page/Inquiry Scan, with deep sleep	770	µA
BLE Advertising, 1.28s, non-connectable	225	µA
BLE Advertising, 1.28s, discoverable	245	µA

2.5. Selected RF Characteristics

Parameters	Conditions	Typical	Unit
Antenna load		50	ohm
Radio Receiver			
Sensitivity level	BER < .001 with DH5	-92	dBm
Maximum usable level	BER < .001 with DH1	0	dBm
Input VSWR		2.5:1	
Radio Transmitter			
Maximum output power	50 Ω load	+12	dBm
Initial Carrier Frequency Tolerance		0	kHz
20 dB Bandwidth for modulated carrier		935	kHz

Downloaded from Arrow.com.

2.6. I/O Operating Characteristics

Symbol	Parameter	Min	Max	Unit	Conditions
V_{IL}	Low-Level Input Voltage	-	0.6	Volts	$2.2V \leqslant V_{IN} \leqslant 4.8V$
V_{IH}	High-Level Input Voltage	1.4	-	Volts	$2.2V \leqslant V_{IN} \leqslant 4.8V$
V_{OL}	Low-Level Output Voltage	-	0.4	Volts	$2.2V \leqslant V_{IN} \leqslant 4.8V$
V_{OH}	High-Level Output Voltage	1.5	-	Volts	$2.2V \leqslant V_{IN} \leqslant 4.8V$
I_{OL}	Low –Level Output Current	-	4.0	mA	V_{OL} = 0.4 V
I_{OH}	High-Level Output Current	-	4.0	mA	V_{OH} = 1.8V
R_{PU}	Pull-up Resistor	80	120	KΩ	Resistor Turned On
R_{PD}	Pull-down Resistor	80	120	KΩ	Resistor Turned On

Downloaded from Arrow.com.

2.7. Pin Assignment

Name	Type	Pin #	Description	ALT Function	5V Tolerant	Initial State
UART Interface						
RXD	I	13	Receive data		Y	
TXD	O	14	Transmit data		Y	
RTS	O	12	Request to send (active low)	I2C Data	Y	
CTS	I	11	Clear to send (active low)	I2C Clock	Y	
Reserved						
BOOT 0	I	9	Reserved			
Power and Ground						
VIN		8	VIN			
GND		7	GND			
LDOOUT		18	LDO OUTPUT 1.9V (80mA max)			
Reset						
RESETN	I	10	Reset input (active low for 5 ms)		2.5V max	
LPO						
LPO	I	15	Low power clock input (required)			
GPIO – General Purpose Input/Output						
GPIO [1]	I/O	1	General Purpose Input/Output	SPI MISO	Y	Input pull down
GPIO [2]	I/O	2	General Purpose Input/Output	SPI MOSI/I2S_SD	Y	Floating
GPIO [3]	I/O	3	General Purpose Input/Output	SPI SCLK/ I2S_SCK	Y	Input pull down
GPIO [4]	I/O	4	General Purpose Input/Output	SPI SS/I2S_WS	Y	Input pull down
GPIO [5]	I/O	5	General Purpose Input/Output	I2C Data	Y	Input pull down
GPIO [6]	I/O	6	General Purpose Input/Output	I2C Clock	Y	Input pull down
GPIO [7]	I/O	17	General Purpose Input/Output	ADC 0	Y	Input pull down
GPIO [8]	I/O	16	General Purpose Input/Output	ADC1	Y	Input pull down

Downloaded from Arrow.com.

2.8. Pin Placement Diagram (Top View)

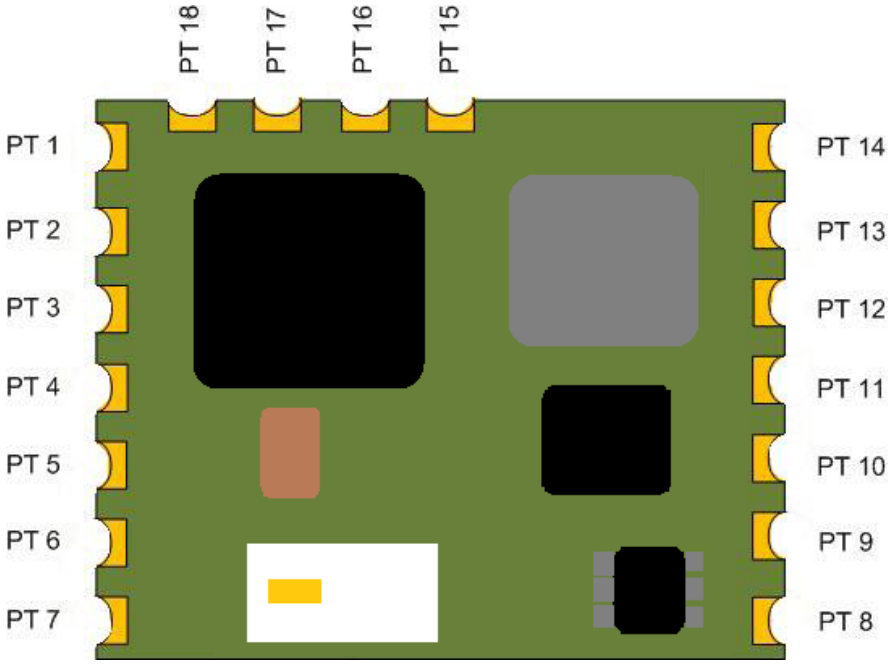

Downloaded from Arrow.com.

2.9. Layout Drawing

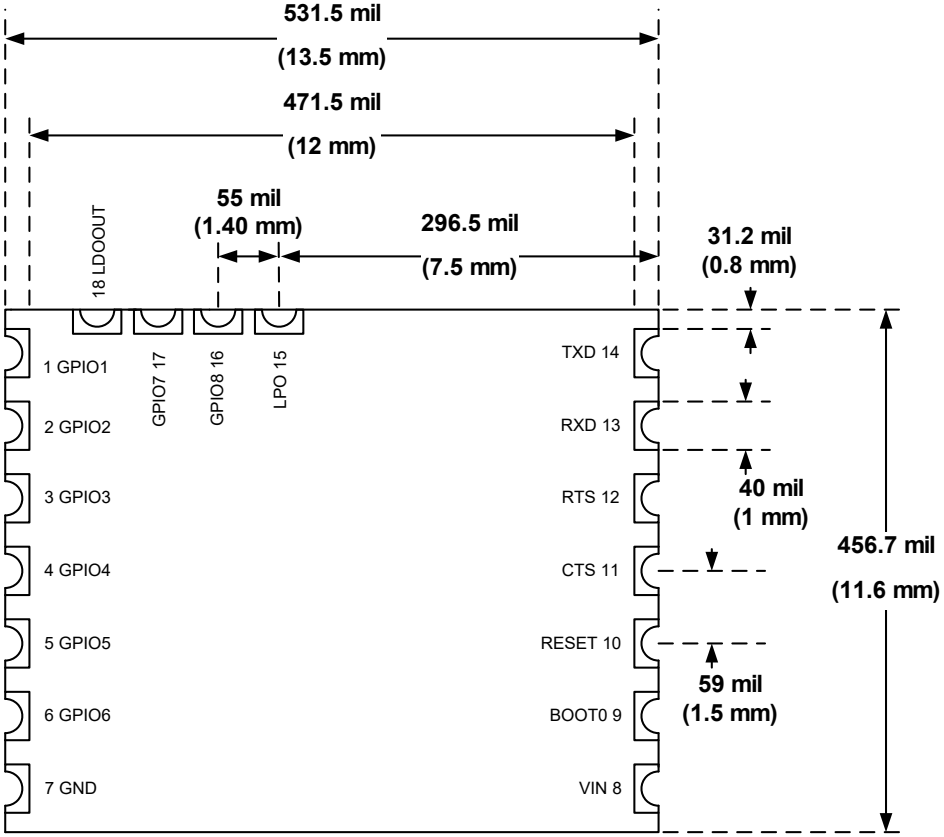

Dimensions: 13.5 mm x 11.6 mm x 2.4 mm
(edge tolerances + 0.4mm / - 0.2mm, height tolerance +/- 0.2mm)

3. Module Block Diagram

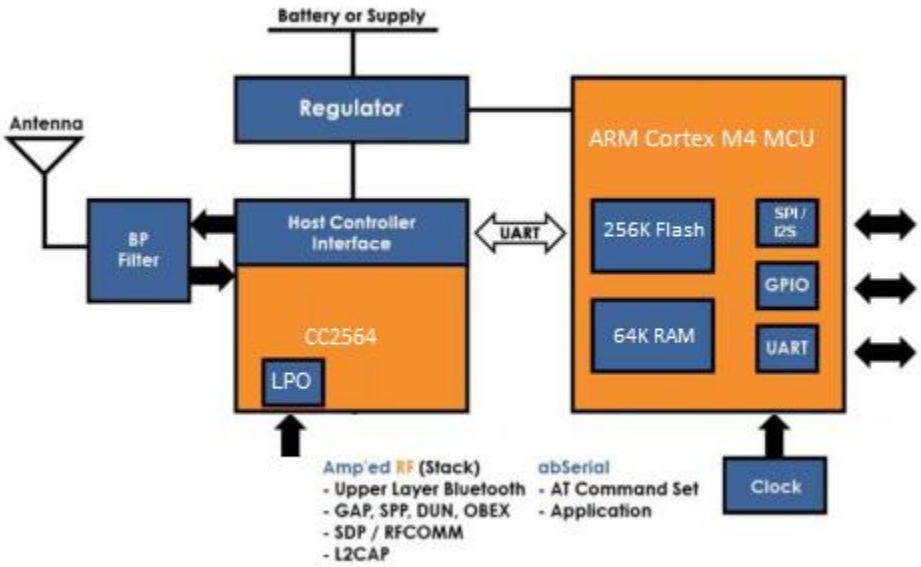

Downloaded from Arrow.com.

4. Hardware Design

Amp'ed RF modules support UART, USB, SPI, and GPIO hardware interfaces. Please note that the usage of these interfaces is dependent upon the firmware that is loaded into the module, and is beyond the scope of this document. The AT command interface uses the main UART by default.

Notes

- An external Low Power Oscillator is *required* on pin 15.
- All unused pins should be left floating; do not ground.
- All GND pins must be well grounded.
- The area around the antenna should be free of any ground planes, power planes, trace routings, or metal for at least 6 mm in all directions.
- Traces should not be routed underneath the module.

4.1. Module Reflow Installation

The BT53 is a surface mount Bluetooth module supplied on a 18 pin, 6-layer PCB. The final assembly recommended reflow profiles are:

For RoHS/Pb-free applications, Sn96.5/Ag3.0/Cu0.5 solder is recommended.

- Maximum peak temperature of 230° - 240°C (below 250°C).
- Maximum rise and fall slope after liquidous of < 2°C/second.
- Maximum rise and fall slope after liquidous of < 3°C/second.
- Maximum time at liquidous of 40 – 80 seconds.

4.2. GPIO Interface

All GPIOs are capable of sinking and sourcing 6mA of I/O current.

Downloaded from Arrow.com.

4.3. UART Interface

The UART is compatible with the 16550 industry standard. Four signals are provided with the UART interface. The TXD and RXD pins are used for data while the CTS and RTS pins are used for flow control.

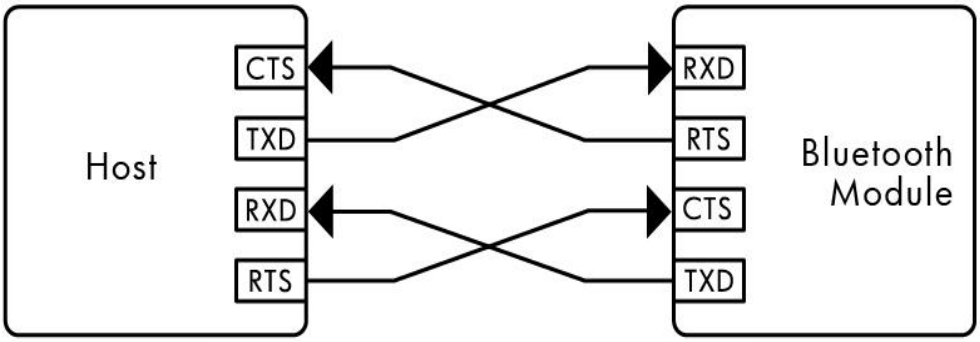

Connection to Host Device

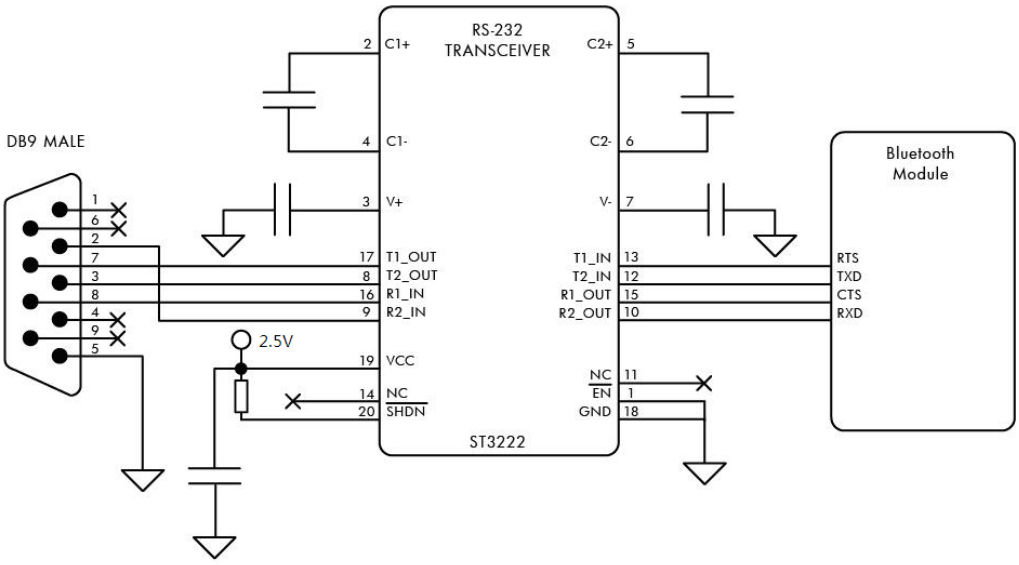

Typical RS232 Circuit

Downloaded from Arrow.com.

4.4. PCB Layout Guidelines

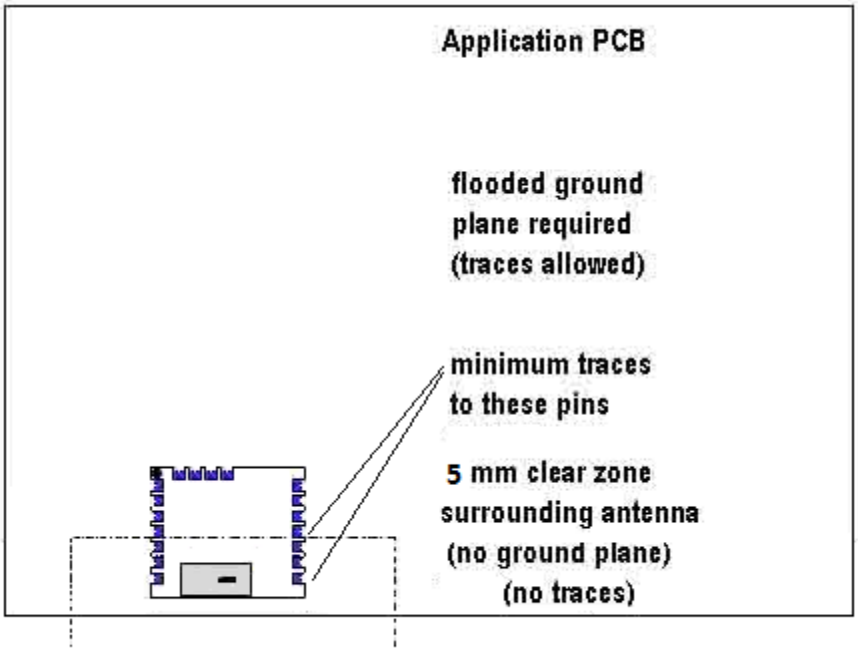

4.5. Reset Circuit

Two types of system reset circuits are detailed below:

4.5.1. External Reset Circuit:

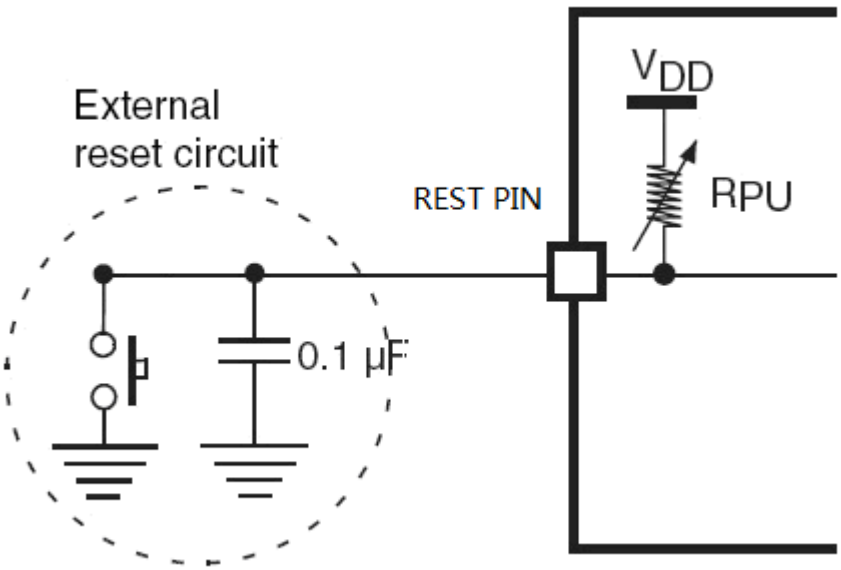

Note: R_{PU} ranges from 30K ohm to 50K ohm internally.

Downloaded from Arrow.com.

4.5.2. Internal Reset Circuit:

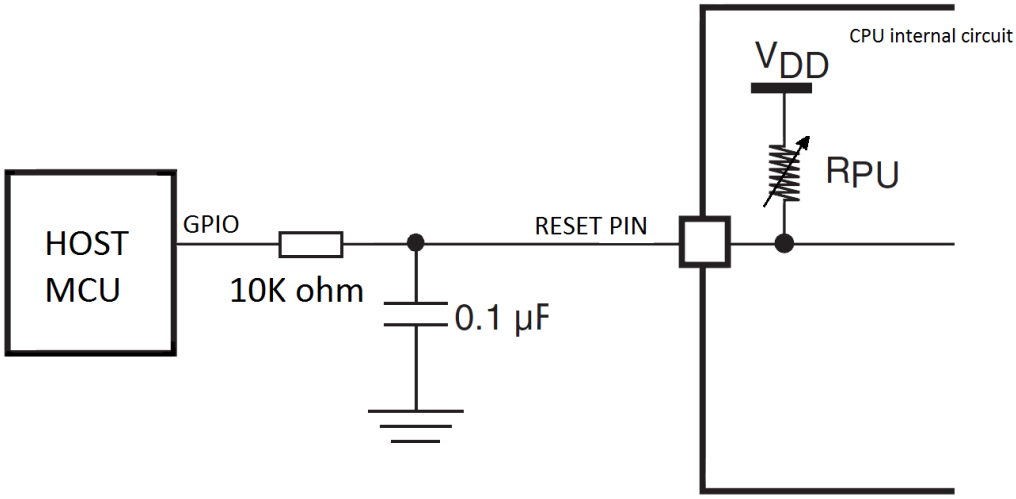

Notes:

- R_{PU} ranges from 30K ohm to 50K ohm internally.
- R_{RST} should be from 1K ohm to 10K ohm

Downloaded from Arrow.com.

4.6. External LPO Input Circuit

An external source must supply the slow clock and connect to the LPO pin (for example, the host or external crystal oscillator). The source must be a digital signal in the range of 0 to 1.8 V.

The accuracy of the slow clock frequency must be 32.768 KHz ±150 ppm for Bluetooth use.

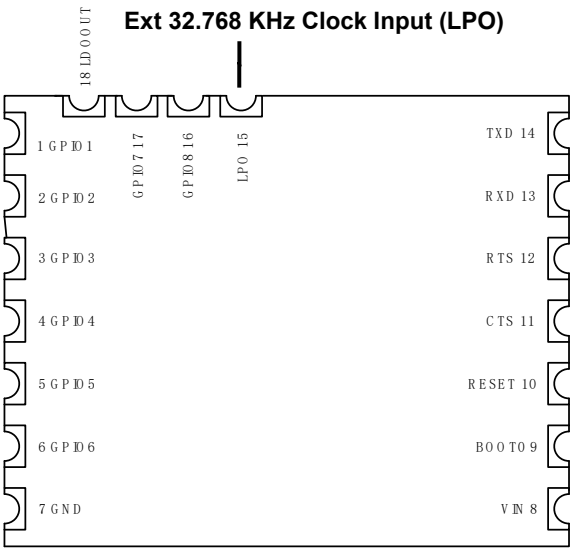

LPO Parameters:

Frequency: 32.768 KHz

Tolerance: 150 ppm

Voltage Levels:

Low: 0.1 V

High: 1.8 V

Input Capacitance: 2.5 pF maximum

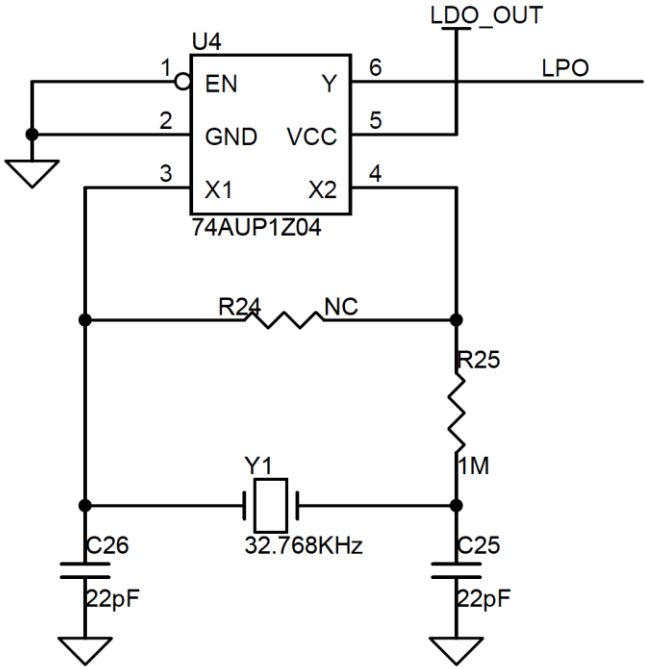

External LPO Reference Circuit

Downloaded from Arrow.com.

4.7. Audio Application Reference Design

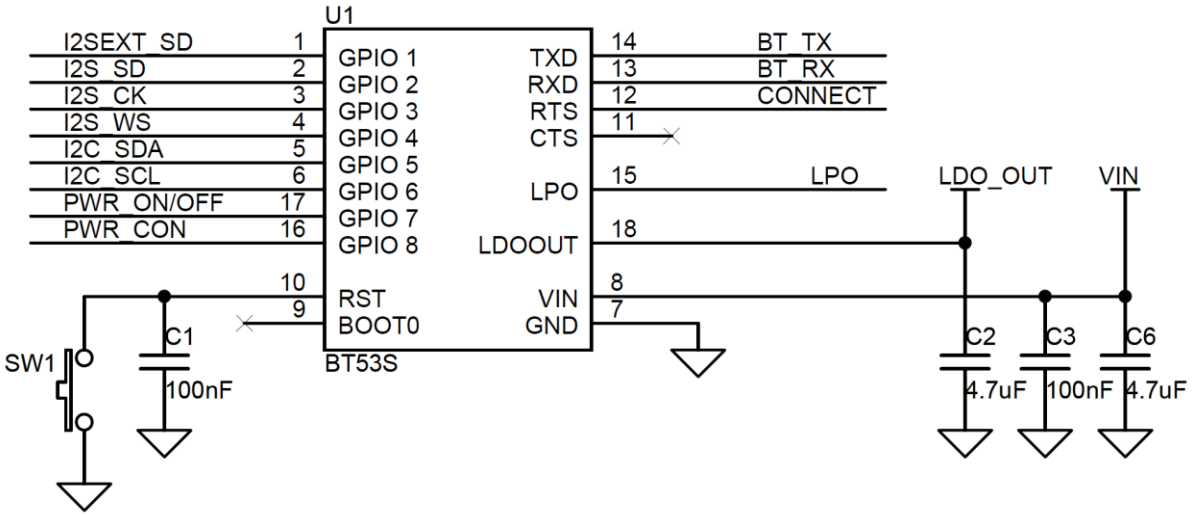

Part 1. Module

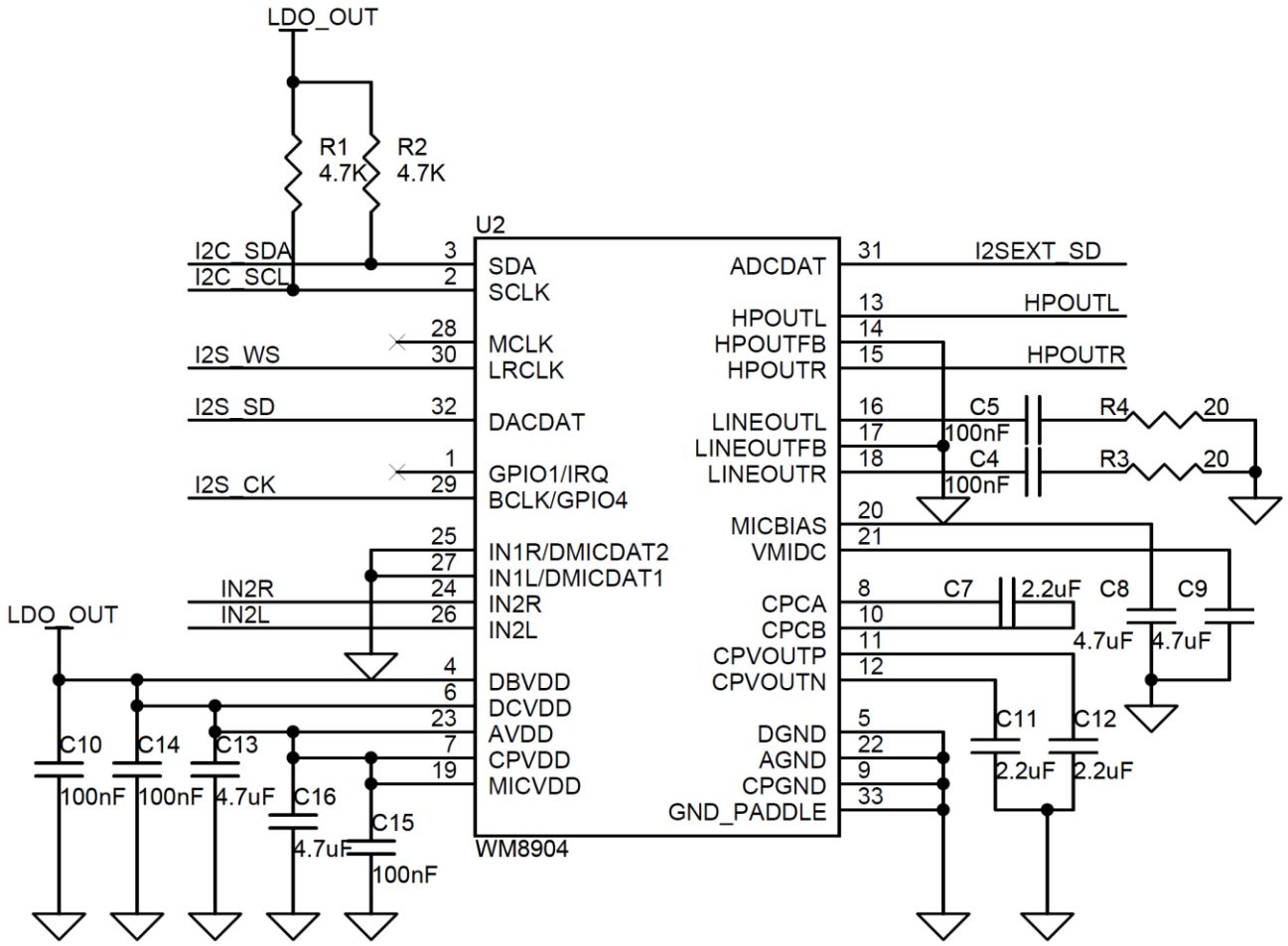

Downloaded from Arrow.com.

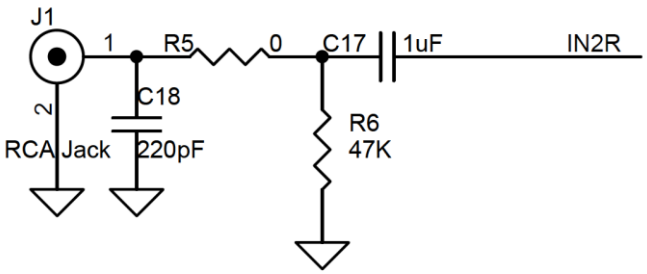

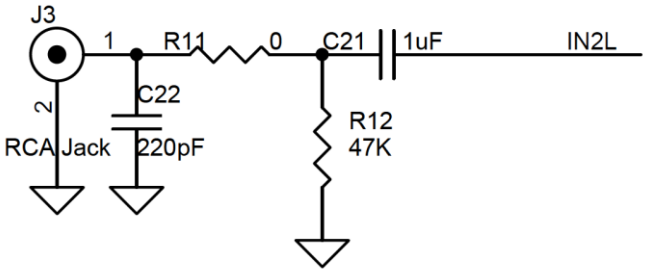

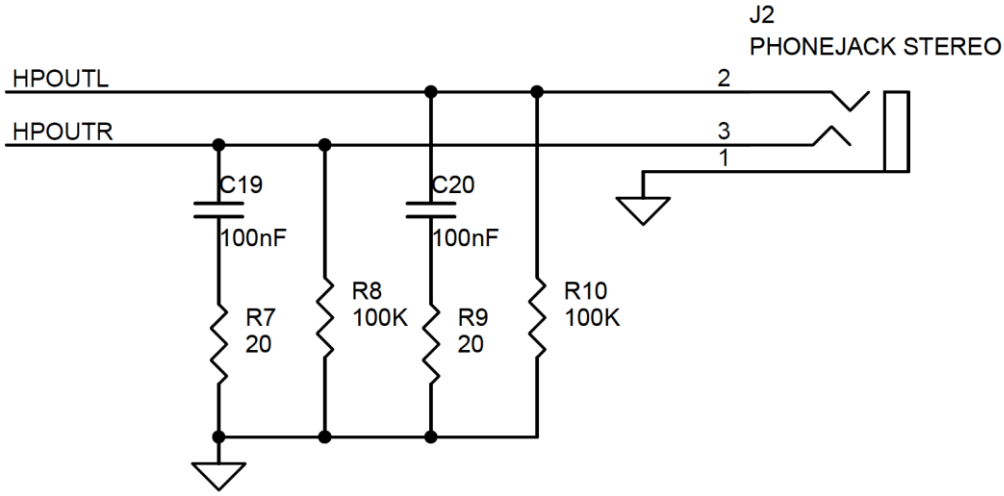

Part 2. Codec

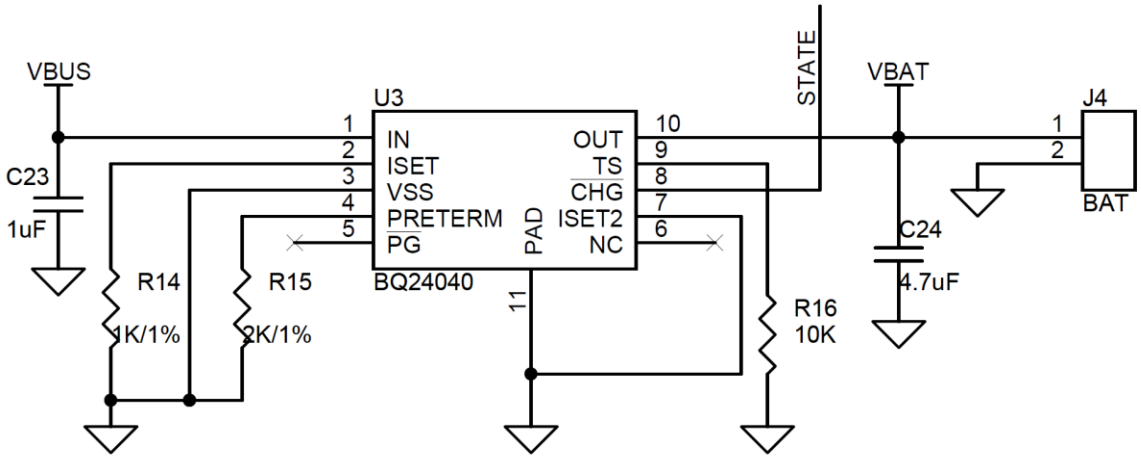

Part 3. Battery charging

Downloaded from Arrow.com.

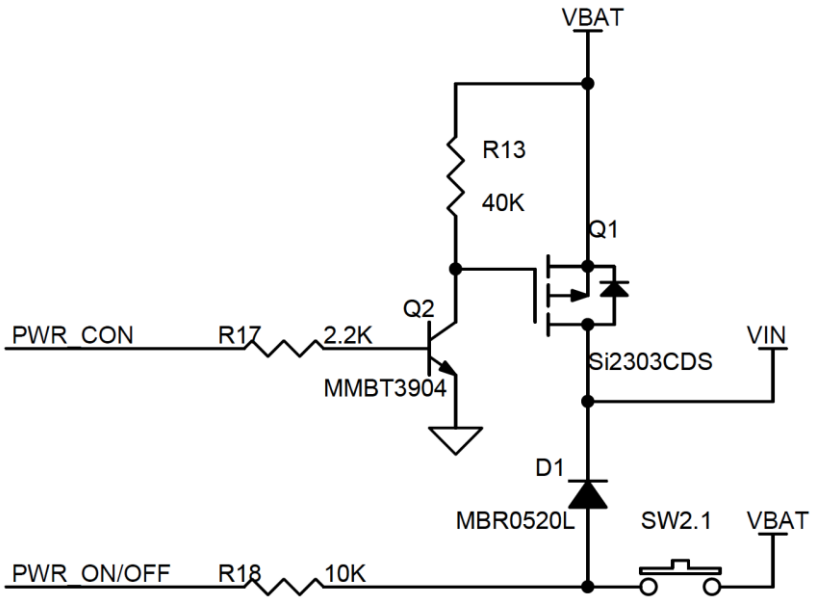

Part 4. Power control

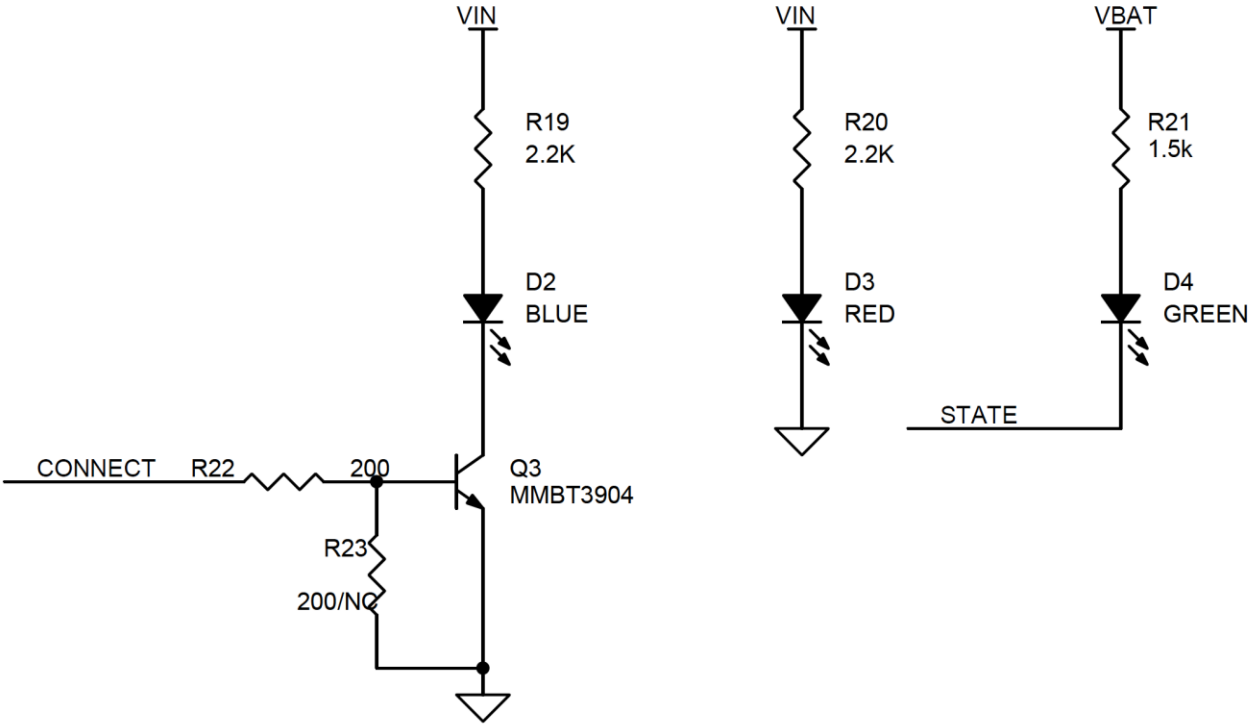

Part 5. LED indicator

Downloaded from Arrow.com.

4.8. UART level shifter for 3.3V system

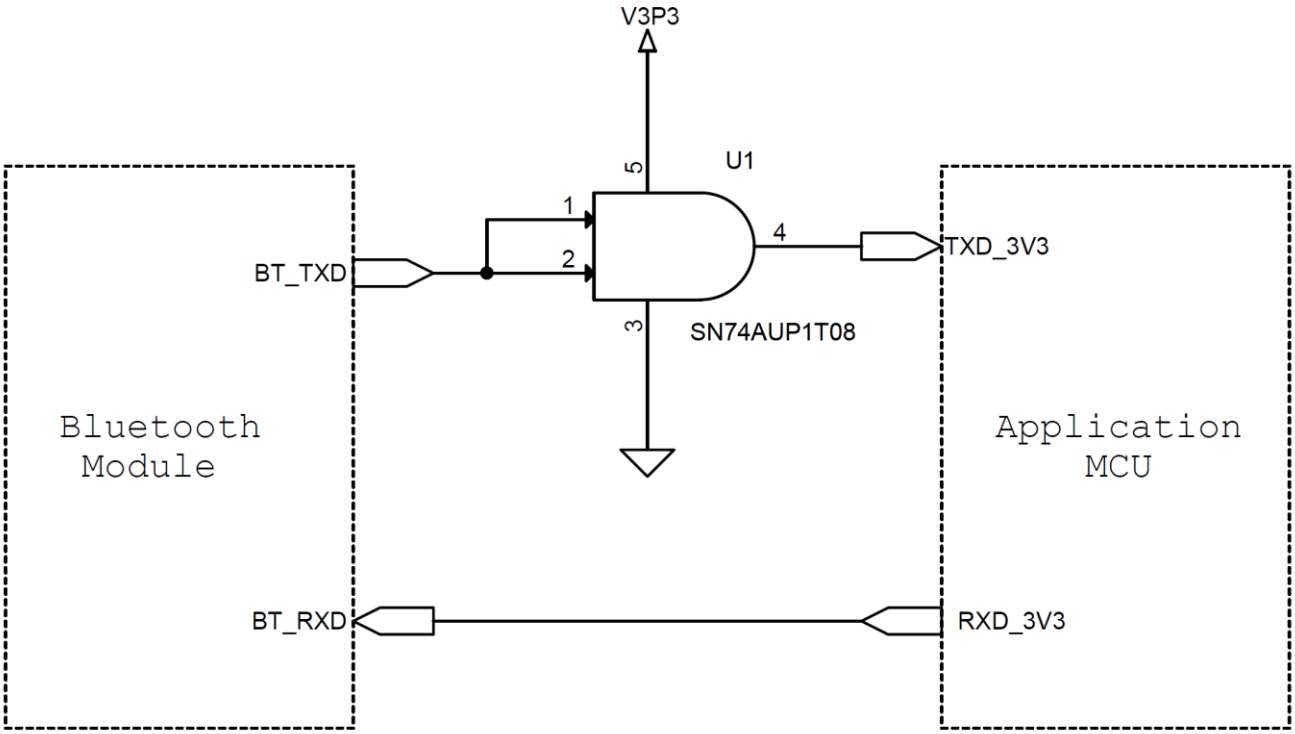

5. Regulatory Compliance

Federal Communications Commission statement:

This module has been tested and found to comply with the FCC Part15.

These limits are designed to provide reasonable protection against harmful interference in approved installations. This equipment generates, uses, and can radiate radio frequency energy and, if not installed and used in accordance the instructions, may cause harmful interference to radio communications. However, there is no guarantee that interference will not occur in a particular installation.

This device complies with part 15 of the FCC Rules. Operation is subject to the following two conditions: (1) This device may not cause harmful interference, and (2) this device must accept any interference received, including interference that may cause undesired operation.

Modifications or changes to this equipment not expressly approved by Amp'ed RF Technology may void the user's authority to operate this equipment.

The modular transmitter must be equipped with either a permanently affixed label or must be capable of electronically displaying its FCC identification number

(A) If using a permanently affixed label, the modular transmitter must be labeled with its own FCC identification number, and, if the FCC identification number is not visible when the module

Downloaded from Arrow.com.

is installed inside another device, then the outside of the device into which the module is installed must also display a label referring to the enclosed module. This exterior label can use wording such as the following: “Contains Transmitter Module FCC ID: X3ZBTMOD8” or “Contains FCC ID: X3ZBTMOD8.”

(B) If the modular transmitter uses an electronic display of the FCC identification number, the information must be readily accessible and visible on the modular transmitter or on the device in which it is installed. If the module is installed inside another device, then the outside of the device into which the module is installed must display a label referring to the enclosed module. This exterior label can use wording such as the following: “Contains FCC certified transmitter module(s).”

To satisfy FCC RF Exposure requirements for mobile and base station transmission devices, a separation distance of 20 cm or more should be maintained between the antenna of this device and persons during operation. To ensure compliance, operation at closer than this distance is not recommended. The antenna(s) used for this transmitter must not be co-located or operating in conjunction with any other antenna or transmitter.

Industry Canada statement:

Label of the end product:

The final end product must be labeled in a visible area with the following "Contains transmitter module IC: 8828A-MOD8"

This Class B digital apparatus complies with Canadian ICES-003.

Cetappareilnumérique de la classe B estconforme à la norme NMB-003 du Canada.

This device complies with RSS-210 of the Industry Canada Rules. Operation is subject to the following two conditions: (1) This device may not cause harmful interference, and (2) this device must accept any interference received, including interference that may cause undesired operation.

Ce dispositif est conforme à la norme CNR-210 d'Industrie Canada applicable aux appareils radio exempts de licence. Son fonctionnement est sujet aux deux conditions suivantes: (1) le dispositif ne doit pas produire de brouillage préjudiciable, et (2) ce dispositif doit accepter tout brouillage reçu, y compris un brouillage susceptible de provoquer un fonctionnement indésirable.

5.1. Modular Approval, FCC and IC

FCC ID: X3ZBTMOD8

IC: 8828A-MOD8

In accordance with FCC Part 15, the BT53 is listed above as a Modular Transmitter device.

Downloaded from Arrow.com.

5.2. FCC Label Instructions

The outside of final products that contain a BT53 device must display a label referring to the enclosed module. This exterior label can use wording such as the following:

Contains Transmitter Module

FCC ID: X3ZBTMOD8

IC: 8828A-MOD8

Any similar wording that expresses the same meaning may be used.

5.3. CE

Registration No.: RT 60099658 0001

Report No.: 17046060 001

5.4. Bluetooth Qualification

Declaration ID: D060240

6. Ordering Information

Part Name	Description
BT53H	High performance version
BT53S	Audio application version
BT53i	Updated high performance version
BT53H-C	Alternative MCU for high performance version and Bluetooth Qualification v5.1 update. Same spec as BT53i otherwise.
BT53B	Low cost version

Downloaded from Arrow.com.

7. Feature Comparison

Features	BT53H	BT53S	BT53i
CPU Speed	84MHz Max.	84MHz Max.	100MHz Max.
CPU Memory	256K Flash, 64K RAM	256K Flash, 64K RAM	512K Flash, 128K RAM
Bluetooth Profile Support	SPP, IAP, HID, OBEX	SPP, IAP, A2DP, HFP, AVRCP, HID, OBEX	SPP, IAP, HID, OBEX
Bluetooth Stack	Amp'edUP, BT v5.1 + BLE	Amp'edUP, BT v5.1 + BLE	Amp'edUP, BT v5.1 + BLE
Apple iOS Support	Supported	Supported	Supported
AT Command Interface	abSerial	abSerial	abSerial
Multiple Connections	4 Max.	4 Max.	4 Max.
Link Throughput	1.5M bps max	1.5M bps max	1.5M bps max
Serial Interface	UART, I2S, I2C, SPI	UART, I2S, I2C, SPI	UART, I2S, I2C, SPI
General I/O Lines	7	7	7
A/D Lines	4	4	4

8. Revision History

Data	Revision	Description
29Aug 2014	1	First release.
18 Dec 2014	1.1	Added BT53S model.
9 Feb 2015	1.2	Updated section 5, added FCC ID, IC ID, CE and BQB.
30 Mar 2015	1.3	Updated section 2.5, section 2.8 and section 4.7. Added section 4.8.
23 July 2015	1.4	Updated section 4.6 and 4.7.
19 Nov 2015	1.5	Added BT53i.
13 June 2018	1.6	Clarified module dimensions

Downloaded from Arrow.com.