THIS DRAWING IS UNPUBLISHED. RELEASED FOR PUBLICATION NOV ,2006.
© COPYRIGHT 2006 By – ALL RIGHTS RESERVED.

REVISIONS					
P	LTR	DESCRIPTION	DATE	DWN	APVD
	C1	REVISED PER ECO–13–001327	31MAY13	RZ	MY

NOTES

1. SINGLE PACK IN ACCORDANCE WITH AMP SPEC 107–3275
2. 100 TRAY PACK IN ACCORDANCE WITH AMP SPEC 107–3275
3. Ni PLATING
4. FOR TECHNICAL DATA REFER TO YOUR LOCAL TE CONNECTIVITY SALES OFFICE
5. ALL DIMENSIONS ARE NOMINAL FOR REFERENCE ONLY UNLESS OTHERWISE STATED

	THREAD X	A	CABLE GROUPS	PART NO.
	DIMENSIONS			
	M8	5.60	CT125	5–1814822–7
OBSOLETE	~~M8~~	~~5.60~~	~~CT125~~	~~5–1814822–6~~
	M7	4.90	CT100	5–1814822–5
OBSOLETE	~~M7~~	~~4.90~~	~~CT100~~	~~5–1814822–4~~
	M9	4.90	RG6/U	5–1814822–3
OBSOLETE	~~M9~~	~~4.90~~	~~RG6/U~~	~~5–1814822–2~~
OBSOLETE	~~1/4–20UNC–2B~~	~~3.90~~	~~RG59B/U, 62A/U, 140/U, 210/U, URM90, Belden 9291, 9291, KX6A, KX25, KX52, KX53~~	~~5–1814822–1~~
OBSOLETE	~~1/4–20UNC–2B~~	~~3.90~~	~~RG59B/U, 62A/U, 140/U, 210/U, URM90, Belden 9291, 9291, KX6A, KX25, KX52, KX53~~	~~5–1814822–0~~

VIEW I

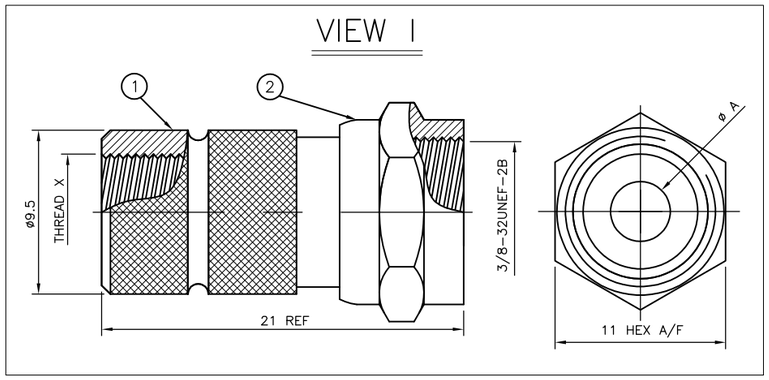

VIEW II

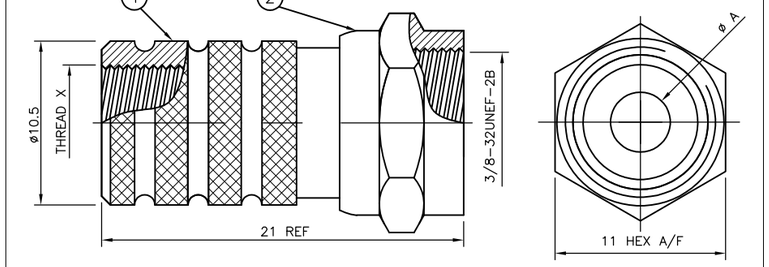

VIEW III

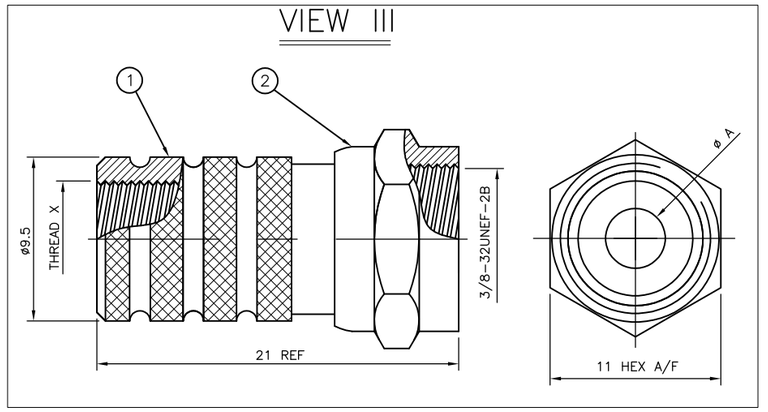

RECOMMENDED
CABLE STRIPPING DIM'S

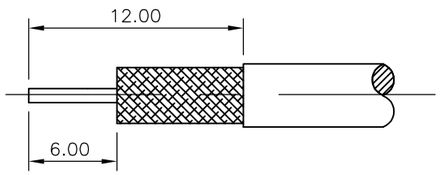

NOTE

AFTER PREPARING CABLE AS SHOW ROLL BRAID BACK OVER CABLE BEFORE TWISTING CONNECTOR ON.

VIEW III				VIEW II		VIEW I				
	OBSOLETE		OBSOLETE		OBSOLETE	OBSOLETE	OBSOLETE			
1	1	1	1	1	1	1	1	ZINC ALLOY △3	COUPLING NUT	2
1	1	1	1	1	1	1	1	BRASS △3	BODY	1
5–7	5–6	5–5	5–4	5–3	5–2	5–1	5–0	MATERIAL	DESCRIPTION	ITEM
△2	△1	△1	△2	△2	△1	△1	△2			
QUANTITY PER ASSY								PARTS LIST		

THIS DRAWING IS A CONTROLLED DOCUMENT.

DIMENSIONS: mm

TOLERANCES UNLESS OTHERWISE SPECIFIED:
0 PLC ± –
1 PLC ± 0.3
2 PLC ± 0.2
3 PLC ± 0.1
4 PLC ± –
ANGLES ± 5°

MATERIAL: SEE TABLE

FINISH: –

DWN ANSON MA 14FEB09
CHK RITA ZUO 14FEB09
APVD BOB ZHAO 14FEB09
PRODUCT SPEC 108–112000
APPLICATION SPEC —
WEIGHT —

TE Connectivity

NAME
F TYPE STR PLG T/O
–
–

SIZE	CAGE CODE	DRAWING NO	RESTRICTED TO
A3	00779	C–1814822	—

CUSTOMER DRAWING | SCALE NTS | SHEET 1 OF 1 | REV C1

Downloaded from Arrow.com.