Additional Resources: Product Page

REV.	DESCRIPTION	DATE
A	initial release	10/22/2008
B	brand update	04/13/2020

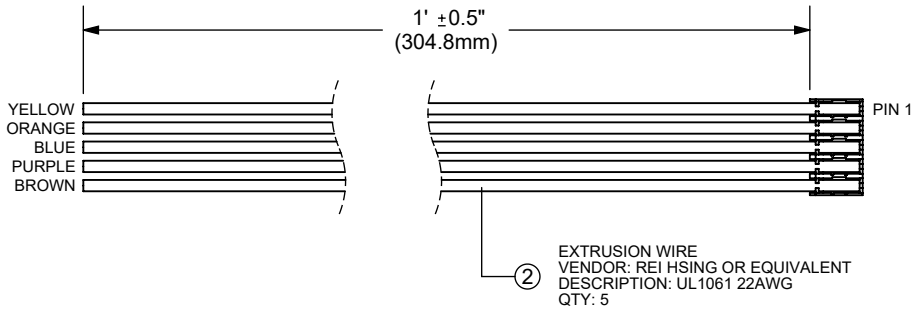

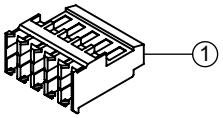

RoHS

CUI DEVICES

6405 SW Rosewood St, Suite C
Lake Oswego, OR 97035
Phone: 877-323-3576

Website: www.cuidevices.com

TITLE: WIRE HARNESS		REV: B
PART NO. CUI-435-1FT		UNITS: INCH[MM]
DRAWN BY: RDS	APPROVED BY:	SCALE: 1:1

PC FILE NAME: CUI-435-1FT

COPYRIGHT 2020 BY CUI DEVICES

Note:
For use with AMT103 encoders

Downloaded from Arrow.com.