© 2022 TE Connectivity. All Rights Reserved.

REVISIONS					
P	LTR	DESCRIPTION	DATE	DWN	APVD
	A	INITIAL REVISION	16FEB2022	GN	RM

SECTION A-A

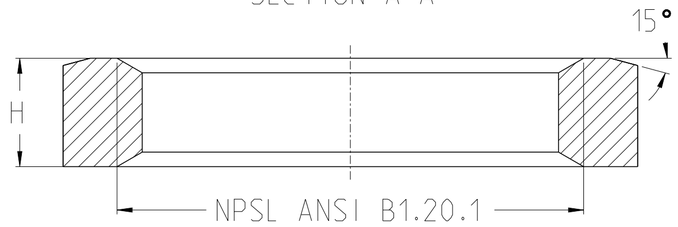

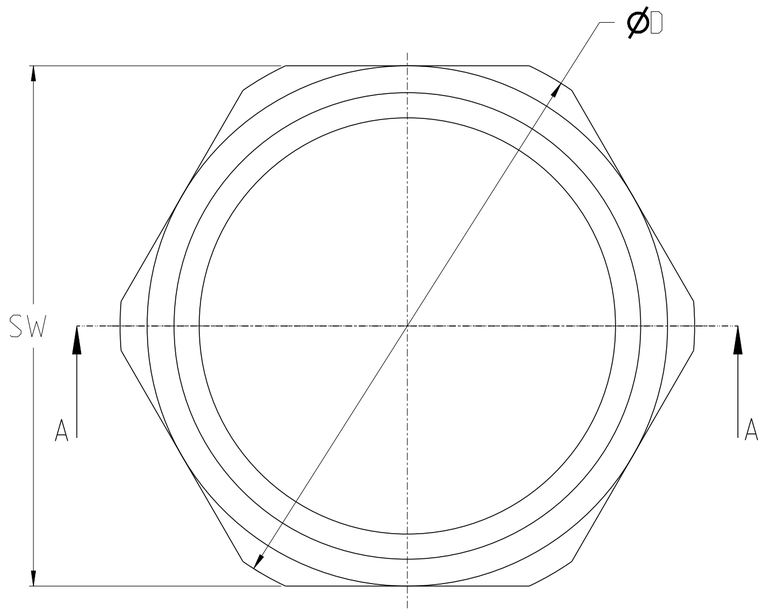

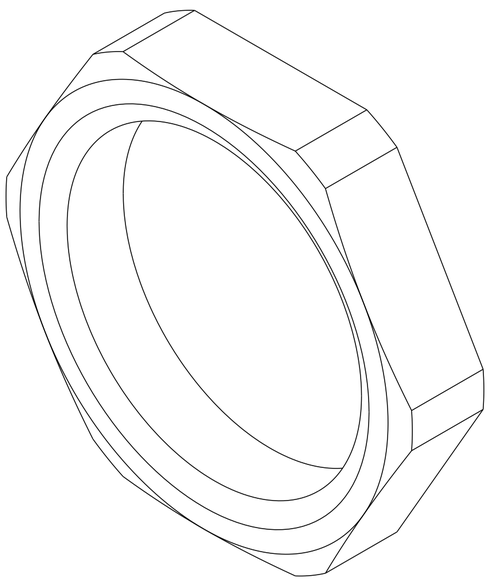

TCPN	TE Product Type (Entrelec)	SIZE	H	D	SW
1SNG608009R0000	EM-LN-NPT14-MET-A	NPSL 1/4″	5.0	18.8	17
1SNG608010R0000	EM-LN-NPT38-MET-A	NPSL 3/8″	5.0	26.5	24
1SNG608011R0000	EM-LN-NPT12-MET-A	NPSL 1/2″	5.0	26.5	24
1SNG608012R0000	EM-LN-NPT34-MET-A	NPSL 3/4″	6.0	37.5	34
1SNG608013R0000	EM-LN-NPT1-MET-A	NPSL 1″	6.0	46.4	42
1SNG608014R0000	EM-LN-NPT114-MET-A	NPSL 1 1/4″	7.0	57.4	52
1SNG608015R0000	EM-LN-NPT112-MET-A	NPSL 1 1/2″	7.0	65.1	60
1SNG608016R0000	EM-LN-NPT2-MET-A	NPSL 2″	8.0	81.8	74

THIS DRAWING IS A CONTROLLED DOCUMENT.

DIMENSIONS: mm

TOLERANCES UNLESS OTHERWISE SPECIFIED:
0 PLC ±
1 PLC ±1
2 PLC ±1
3 PLC ±1
4 PLC ±1
ANGLES ±

MATERIAL: Brass
FINISH: Nickel Plated

DWN 16FEB2022 N Hunashikatti, Girish
CHK 16FEB2022 Rajan n, Kasi
APVD 16FEB2022 Rafeeq, Mohd
PRODUCT SPEC: NPSL-LOCK-NUT-METAL
APPLICATION SPEC: -
WEIGHT: -

TE Connectivity

NAME: NPSL-LOCK-NUT-METAL

SIZE: A2 | CAGE CODE: 00779 | DRAWING NO: C-1SNP061322-0100 | RESTRICTED TO: -

CUSTOMER DRAWING | SCALE 5:1 | SHEET 1 OF 1 | REV A1

1471-9 (3/13)

Downloaded from Arrow.com.