Bellnix®

15 Watt BTI Series

BTI series is an isolated DC-DC converter that achieves industry-leading capacity density of 15 W in a small package of 1 x 1 inch. The power increase due to future function upgrades can be handled without changing the board with the same shape BTJ series (30W). It is a high efficiency (90%), and corresponds wide Input V range (9 to 36V, 18 to 76V). There are 12 models lined up.

<Features>

- -High efficiency
- -Small size, 1x1 inch
- -Wide input voltage range 4:1
- -6 sided shield structure
- -Adjustable output voltage
- -Dual power supply usable as single power supply
- -Isolation voltage DC1500V (1min.)
- -Over current protection
- -No electrolytic capacitor, No tantalum capacitor
- - DIP package
- -Heat sink not required
- -Operating temp. Ta = -40°C to +85°C (Temp. derating required)
- -RoHS compliance

<Model, Rating>

Table 1

Model BTI Series	Input V Vdc	Output V Vdc	Output I A	Line Reg. %(max.)	Load Reg. %(max.)	Ripple Noise mVpp(typ.)	Efficiency %(typ.)
BTI24-03S400D	24 (9 to 36)	3.3	0 to 4	0.4	0.4	10	85
BTI24-05S300D		5	0 to 3			10	87
BTI24-12S130D		12	0 to 1.3			15	88
BTI24-15S100D		15	0 to 1			20	88
BTI24-12W65D		±12	0 to 0.65	0.5	1.0	15	89
BTI24-15W50D		±15	0 to 0.5			15	90
BTI48-03S400D	48 (18 to 76)	3.3	0 to 4	0.4	0.4	10	85
BTI48-05S300D		5	0 to 3			15	87
BTI48-12S130D		12	0 to 1.3			20	88
BTI48-15S100D		15	0 to 1			25	88
BTI48-12W65D		±12	0 to 0.65	0.5	1.0	20	89
BTI48-15W50D		±15	0 to 0.5			20	90

Note 1 : In the measurement circuit in section 4-4.
Note 2 : If not indicated, Input V rating, Output V rating, Output I rating, ambient temp. are measured at 25°C±5°C.
Note 3 : Ripple noise is measured at BW=20MHz.
Note 4 : Temp. derating and forced air cooling required depending on the ambient temp. conditions.

<Specification>

Input voltage range	Refer to Table 1
Rating output voltage	3.3V±2%, 5V±2%, 12V±2%,15V±2%, ±12V±2%, ±15V±2% (Vadj pin at open)
Adjustable output voltage range	Single output products only (refer to article 7-2) 2.97 to 3.63V(3.3V products), 4.5 to 5.5V(5V products), 10.8 to 13.2(12V products), 13.5 to 16.5(15V products), If the output voltage is raised with the variable output voltage function, reduce the output current to the value specified by the maximum output power. Also, when the output voltage is decreased, the output current is up to the rated value.
Line regulation	Refer to Table1 (rating output, for the regulation of input voltage range of Table1)
Load regulation	Refer to Table1 (rating input/output voltage, for the regulation of load 0 to 100% (±Output is when load is at balance))
Temp. regulation	0.02%/°C
Ripple noise	Refer to Table 1 (rating input/output, at room temp, 20MHz bandwidth)
Efficiency	85% to 90% typ. (rating input/output, at room temp., refer to Table 1)
Over current protection	Operates at 105% or more rating load current, auto recovery type, avoid over current condition for more than 30 seconds.
Over voltage protection	None
Low input voltage protection	Available
Over input current protection	None
Remote ON/OFF	Between 1pin (ON/OFF) and -2pin (-Vin): output goes OFF at open, output goes ON when in short (refer to article 7-1)
Isolation voltage	Input-output: DC1500V 1min., between input / output case, DC1000V 1min
Isolation resistance	Between output-case over 100MΩ at DC500V
Primary-secondary capacitance	Approx. 1000pF
Operating temp. range	Operating temp. -40°C to +85°C (need temp. derating from +60°C)
Storage temp. range	Storage temp. -55°C to +125°C
Moisture range	Moisture range 95%R.H. max. (non-condensing)
Cooling condition	Air convention (set in a place where good convection is ensured)
Vibration	10 to 55Hz, Scanning time 3mins, All amplitude 1.52mmp-p (1 hr. each for 3 directions)
Shock	Acceleration 490.3m/s^2
Weight	20g typ.
Outline	W=25.4 L=25.4 H=9.9(mm) typ.

* Unless condition is specified, above specification is regulated as rating value.
* Please note that the contents are subject to change without notice due to improvements or other reasons.

Downloaded from Arrow.com.

1. Application range

This datasheet applies to the isolated DC/DC converter, BTI series.

2. Model / Rating

Model	Rating Input Voltage	Rating Output	Package
BTI24-03S400D	DC24V	3.3V, 4A	DIP
BTI24-05S300D		5V, 3A	DIP
BTI24-12S130D		12V, 1.3A	DIP
BTI24-15S100D		15V, 1A	DIP
BTI24-12W65D		±12V, 0.65A each	DIP
BTI24-15W50D		±15V, 0.5A each	DIP
BTI48-03S400D	DC48V	3.3V, 4A	DIP
BTI48-05S300D		5V, 3A	DIP
BTI48-12S130D		12V, 1.3A	DIP
BTI48-15S100D		15V, 1A	DIP
BTI48-12W65D		±12V, 0.65A each	DIP
BTI48-15W50D		±15V, 0.5A each	DIP

3. Environmental Condition

3-1 Temp. range

When operating: -40°C to +85°C (Derating required from 60°C, refer to article 5 for more detail)

When storage: -55°C to +125°C

3-2 Moisture range

When operating: 5 to 95%R.H. (Max. wet-bulb temp. 69°C, non-condensing)

When storage: 5 to 95%R.H. (Max. wet-bulb temp. 69°C, non-condensing)

*For storage before mounting, please store in a room temperature / humidity environment that avoids direct sunlight with little temperature and humidity changes.

Downloaded from Arrow.com.

4 Specification

This product is RoHS compliant.

4-1 Input Condition, Output Characteristics *1

Model	Input Voltage (V)	Output Voltage (V)	Max. Output Power (W)	Output Current (A)	Output Voltage Constancy *2			Output Ripple Noise *3 (mVp-p) typ. / max.	Efficiency (%) typ.
					Input (mV) max.	Load *4 (mV) max.	Temp. (mV) typ.		
BTI24-03S400D	9 to 36	3.3±2%	13.2	0 to 4	13.2	13.2	66	10 / 70	85
BTI24-05S300D		5±2%	15	0 to 3	20	20	100	10 / 70	87
BTI24-12S130D		12±2%	15.6	0 to 1.3	48	48	240	15 / 95	88
BTI24-15S100D		15±2%	15	0 to 1	60	60	300	20 / 95	88
BTI24-12W65D		±12±5%	15.6	0 to 0.65 * 2	60	120	240	15 / 95	89
BTI24-15W50D		±15±5%	15	0 to 0.5 * 2	75	150	300	15 / 95	90
BTI48-03S400D	18 to 76	3.3±2%	13.2	0 to 4	13.2	13.2	66	10 / 70	85
BTI48-05S300D		5±2%	15	0 to 3	20	20	100	15 / 70	87
BTI48-12S130D		12±2%	15.6	0 to 1.3	48	48	240	20 / 95	88
BTI48-15S100D		15±2%	15	0 to 1	60	60	300	25 / 95	88
BTI48-12W65D		±12±5%	15.6	0 to 0.65 * 2	60	120	240	20 / 95	89
BTI48-15W50D		±15±5%	15	0 to 0.5 * 2	75	150	300	20 / 95	90

*1 At measuring circuit of article4-4. Unless condition is specified, input to be rated input and output to be rated output. (dual output products are loaded at balance) Ambient temp. is +25°C±5°C.

*2 Input (Input regulation): for regulation of Input voltage min. - max.
Load (Load regulation): for regulation of Output current 0 - rated
Dual output products have the same output current for two outputs (with balanced load)
Temp. (Temp. regulation): for regulation of ambient temp. -40 to 60°C

*3 Bandwidth 20MHz, at both ends of external capacitor (C2 or C4 & C5)

*4 A dual output product with two outputs having the same current is called a balanced load.
The load fluctuation at the time of asymmetric load in the dual output product is as follows.

Model	Load fluctuation during asymmetric load (mV) max.
BTI24-12W65D	480
BTI24-15W50D	600
BTI48-12W65D	480
BTI48-15W50D	600

*2 One of the outputs is the rated output current, and the output current of the other output is 20% to the fluctuation of the rating.

Downloaded from Arrow.com.

4-2 Capacity of external output capacitor

This product has a limit on the capacity of the external output capacitor. The capacity of the external output capacitor should be within the range shown in the table below.

Model	Capacity
BTIxx-03S400D	0 to 10,000μF
BTIxx-05S300D	0 to 7,200μF
BTIxx-12S130D / BTIxx-12W65D *1	0 to 1,200μF
BTIxx-15S100D / BTIxx-15W50D *1	0 to 1,000μF

Max. capacity of external output capacitor

*1 Sum of C4 and C5 in the standard connection circuit of 6-2

4-3 Temp. derating

4-3.1 Measuring method of temp. derating

The mounting direction can be freely selected, but please use it with sufficient consideration for air convection so that heat does not accumulate around this product. Determine the layout of surrounding components and board mounting directions so that air can flow inside the product during forced air cooling or natural air cooling. Please note that output current derating is required when the ambient temperature is high. (refer to the temperature derating curve for the ambient temperature.) The measurement method of temperature derating with respect to the ambient temperature is shown in Fig. 4-1 and Fig. 4-2 below.

When mounting on an actual device, check the ambient temperature at the measurement points shown in the figure below and evaluate the actual device.

Check the case temperature so that the important parts of this product do not exceed the rated temperature.

(1) Measuring method of temp. derating with respect to ambient temp. (in case of natural air cooling)

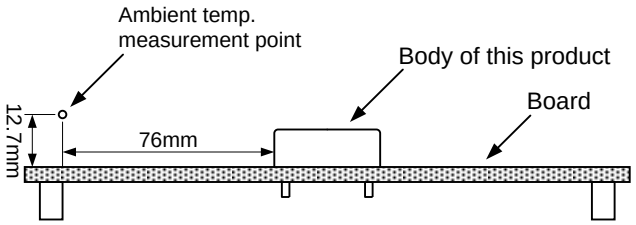

Image 4-1 Measuring method of temp. derating with respect to ambient temp. (in case of natural air cooling)

Downloaded from Arrow.com.

(2) Measuring method of temp. derating with respect to ambient temp. (in case of forced air cooling)

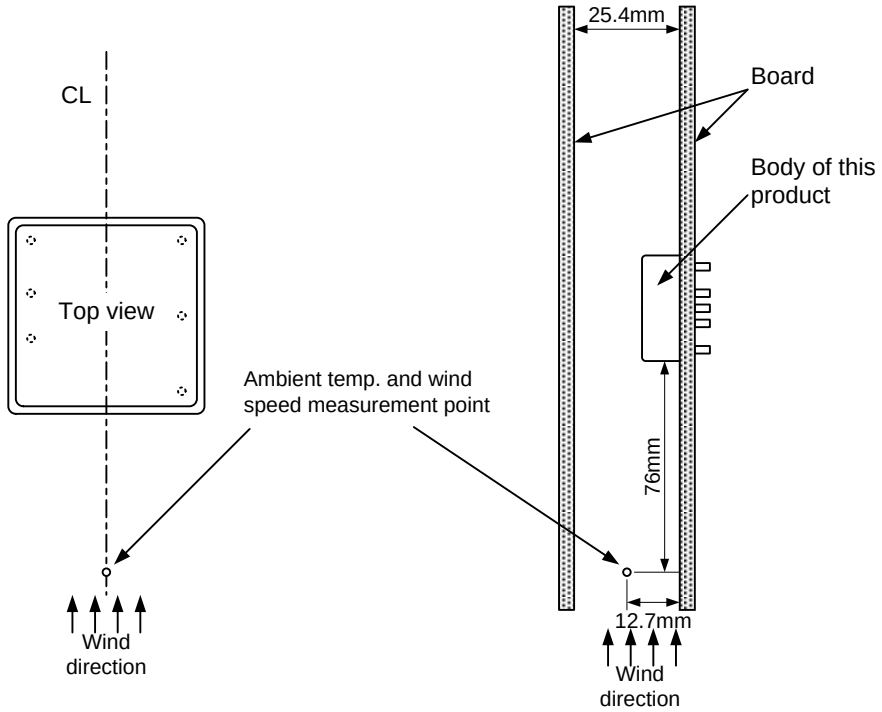

Image 4-2 Measuring method of temp. derating with respect to ambient temp. (in case of forced air cooling)

(3) Measuring point of case temp.

Please make sure that the case temperature is 110ºC or less. Also, when measuring the case temp., make a hole in the center of the label and measure the metal part.

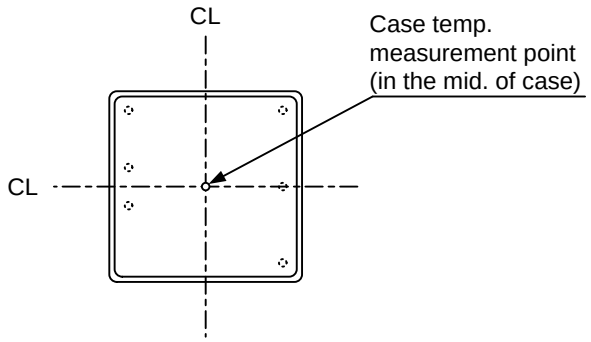

Image 5-3 Measuring point of case temp.

4-3.2 Temperature derating curve

The temperature derating curve below is measured data when mounted on our evaluation board.

Temperature derating is affected by the mounting board, peripheral components and surrounding environment in use. For this reason, make sure that the case temperature (center of the upper surface) during power operation does not exceed 110ºC on the actual machine. Make sure that the ambient temperature does not exceed 85ºC.

*Evaluation board specification

Size	150mm × 70mm t = 1.6mm
Material	FR-4 (both sides)
Copper foil thickness	35μm

Downloaded from Arrow.com.

(1) Temp. derating curve with respect to ambient temp. (reference data Vin:Typ.)

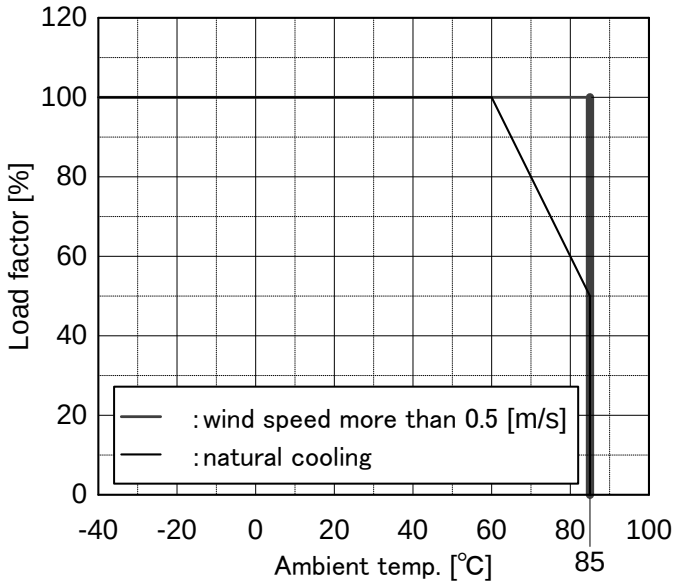

(2) Temp. derating curve with respect to case temp.

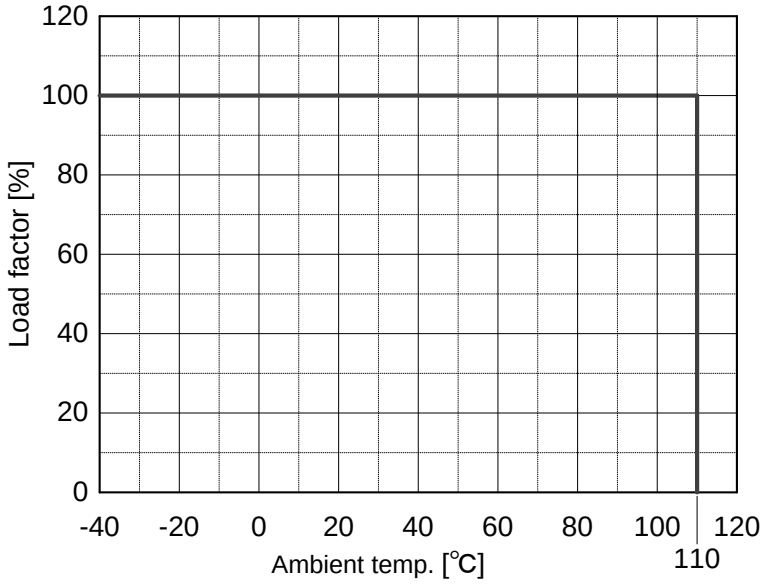

Downloaded from Arrow.com.

4-4 Measurement circuit

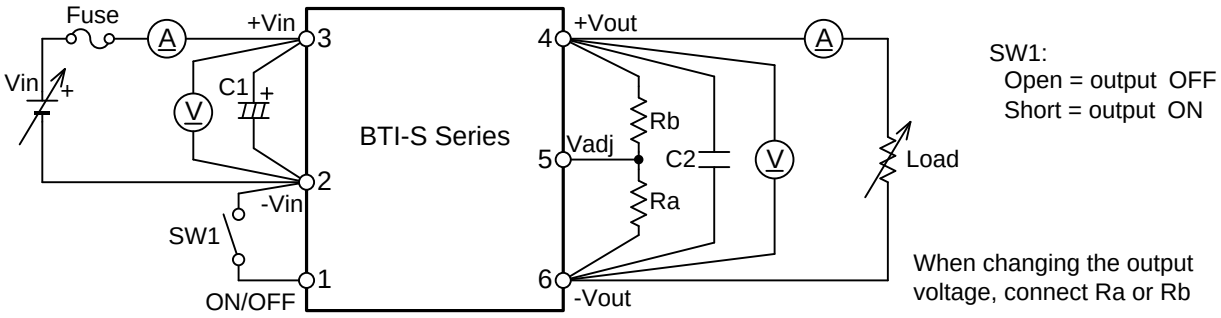

C2: 22μF (multi layer ceramic capacitor)

【BTI24-xxSxxxD】
C1: 120μF
【BTI48-xxSxxxD】
C1: 47μF

*when used at less than -10℃
【BTI24-03S400D / BTI24-05S300D】
C1: 120μF×2

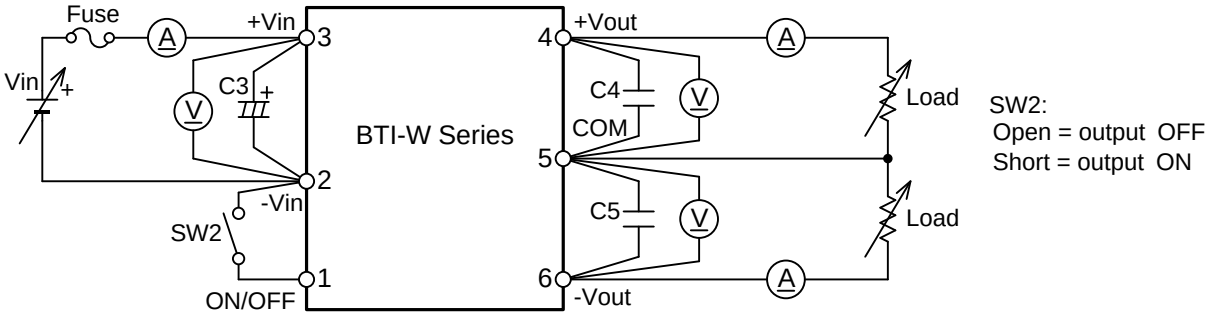

C4, C5: 22μF (multi layer ceramic capacitor)

【BTI24-xxWxxxD】
C3: 120μF
【BTI48-xxWxxxD】
C3: 47μF

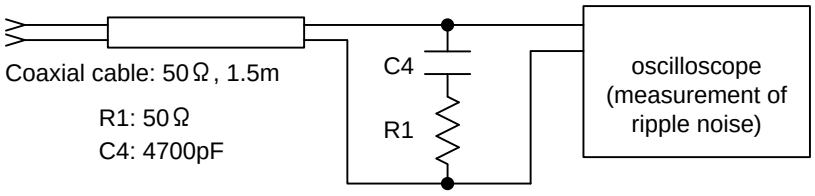

NOTE) Please note that output ripple voltage and output spike noise voltage may be affected by PCB wiring.

Downloaded from Arrow.com.

4-5 Additional function

Article	Specification / Standardization	Condition
Over current protection circuit	Operates above 105%, Hiccup mode, Auto-recovery type	
Over voltage protection circuit	None	
Low input voltage protection function	Available	
Output voltage adjustable range (Single output products only)	rate output voltage ±10% 2.97 to 3.63V（BTIxx-03S400D） 4.5 to 5.5V （BTIxx-05S300D） 10.8 to 13.2V（BTIxx-12S130D） 13.5 to 16.5V（BTIxx-15S100D）	By external resistor, refer to 7-2
ON/OFF control (Negative logic)	-Vin terminal - between ON/OFF terminal Output ON at short (0 to 0.5V) Output OFF at open (4 to 18V)	Refer to 7-1

4-6 Isolation voltage, isolation resistance

1) Isolation voltage

Input - Output : DC1.5kV, 1min

Input - Case : DC1.0kV, 1min

Output - Case : DC1.0kV, 1min

2) Isolation resistance

Output - Case : more than 100MΩ (at DC500V)

5 Outline and pin

5-1 Shape, Size

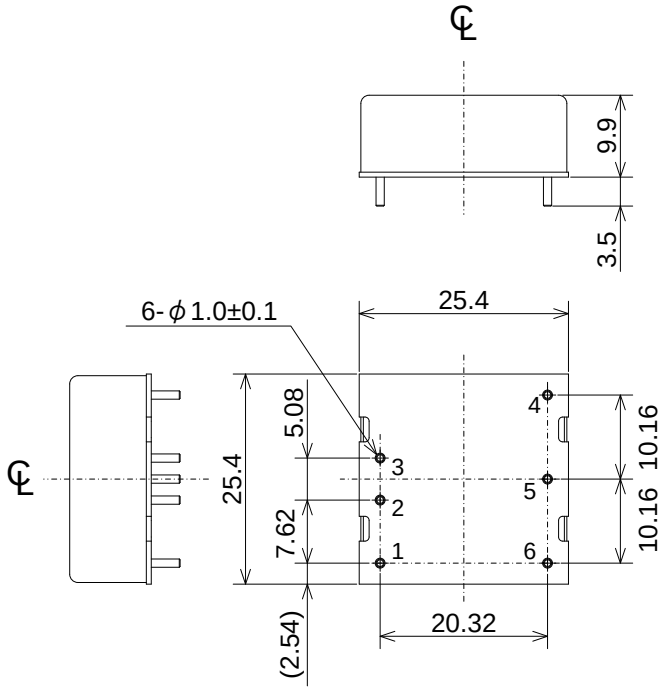

Material of pin and case

Pin	Material:	Copper
	Processing:	Ni (ground work), Sn (plating)
Case	Material:	Brass
	Processing:	Ni (plating)

Dimensions: mm
Dimensional tolerance unless otherwise specified ±0.5mm

The model name and production lot number are displayed on the top.

Downloaded from Arrow.com.

5-2 Recommended dimension of board mounting

The following sizes are recommended for printed circuit board holes and land diameters.
Please refer the image below for the location of holes.
NOTE) The dimensions are recommended values. When designing, consider your design standards.

Pin shape	φ 1.0mm
Hole diameter	φ 1.5mm
Land diameter	φ 2.8mm

Recommended board mounting hole diameter and land diameter

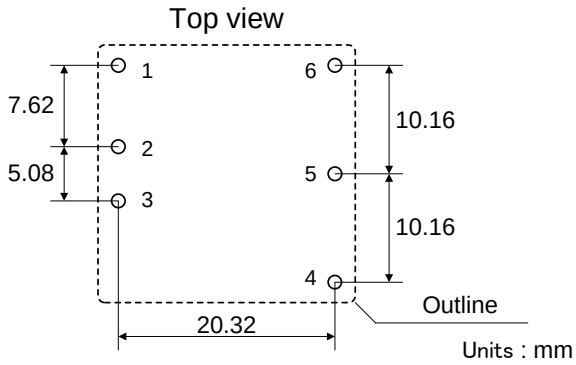

Hole position dimensions

5-3 Pin function

【BTI-S series (single output)】

Pin	Name	Function
1	ON/OFF	Remote ON/OFF control pin
2	-Vin	- Input pin
3	+Vin	+ Input pin
4	+Vout	+ Output pin
5	Vadj	Output voltage variable pin
6	-Vout	- Output pin

【BTI-W series (dual output)】

Pin	Name	Function
1	ON/OFF	Remote ON/OFF control pin
2	-Vin	- Input pin
3	+Vin	+ Input pin
4	+Vout	+ Output pin
5	COM	COMMON pin
6	-Vout	- Output pin

5-4 Lot No.

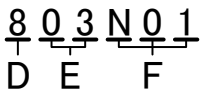

D : Scheduled production year (last digit of the year)
E : Scheduled production week (fiscal week number from April 1)
F : Production management code

(ie: manufactured on Apr. 10, 2017)

* The production year is an American-style fiscal year.

The period starts from Apr. 1 to Mar. 31; the year will be called based on the closing date

ie) Apr. 1, 2016 to Mar. 31, 2017 - year 2017

Apr. 1, 2018 to Mar. 31, 2019 - year 2019

Downloaded from Arrow.com.

6 Standard connection circuit

6-1 BTI-S series

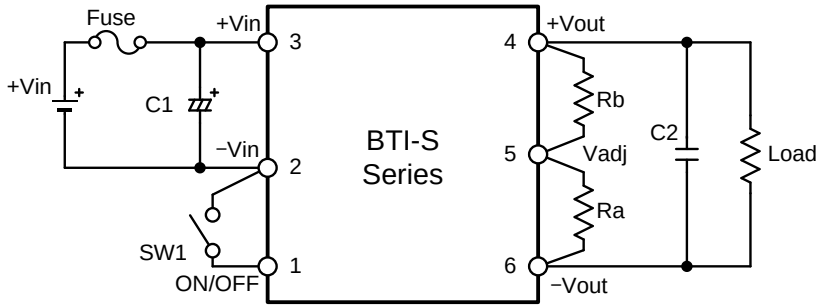

when changing the output voltage, connect Ra or Rb.

【BTI24-xxSxxxD】
C1: more than120 μ F
【BTI48-xxSxxxD】
C1: more than 47 μ F

SW1
Open = Output OFF
Short = Output ON

* when used at less than -10℃
【BTI24-03S400D / BTI24-05S300D】
C1: more than 120 μ F×2

6-2 BTI-W series

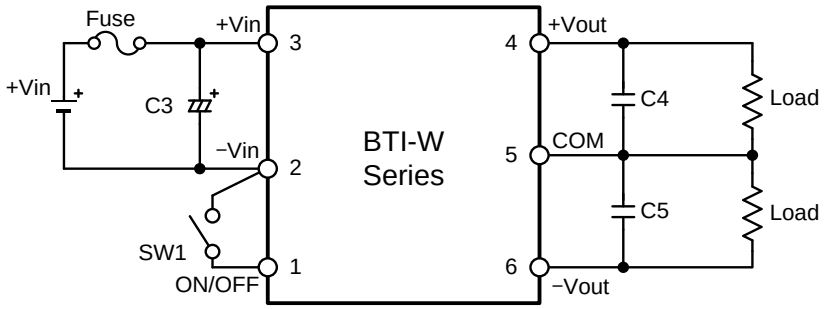

【BTI24-xxSxxxD】
C1: more than120 μ F
【BTI48-xxSxxxD】
C1: more than 47 μ F

SW1
Open = output OFF
Short = output ON

*Since large current flows through the input / output pattern, consider the line drop and temperature rise when designing the current and pattern width.
* The BTI series does not have a built-in fuse. Use external fuses to obtain various safety standards and improve safety. Select a fast-acting fuse and add it to each unit. Install the fuse on the + Vin side if the -Vin side is grounded, and on the -Vin side if the + Vin side is grounded. When selecting an input fuse, consider the margin for the maximum input voltage actually used. Also, an inrush current will flow when the input is turned on, so check the I^2t tolerance of the fuse.

Recommended current ratings for input fuses are as follows:

BTI24-xxSxxxD / BTI24-xxWxxxD : less than 6.3A
BTI48-xxSxxxD / BTI48-xxWxxxD : less than 5.0A

Downloaded from Arrow.com.

* To prevent the input line inductance component from affecting the power supply, add an electrolytic capacitor between the + Vin and -Vin terminals. Use a low impedance electrolytic capacitor with excellent temperature characteristics. (Nippon Chemi-Con made, equivalent to KZE series)

* The BTI series can operate without an external output capacitor. Connection is required to satisfy the specified ripple noise. (C2, C4, C5=22uF) When a steep pulse load is connected to this product or the pattern up to the load is long, the output voltage may become unstable. In such a case, the output voltage can be stabilized by adding a capacitor.

7 Various functions

7-1 Remote ON / OFF control (ON / OFF pin)

By using the ON / OFF pin, the output voltage can be controlled on / off with the input turned on.
The control logic of this product is the negative logic control method (Negative Logic).

To use the ON / OFF function, connect a transistor, relay, etc. between the ON / OFF terminal and -Vin terminal as shown in the figure below. When controlling from the secondary side (output side), insulate with a photocoupler and use the ON / OFF function.

-between Vin pin (2Pin) and ON/OFF pin (1Pin)

short	($0 \leqq V_{ON/OFF} \leqq 0.5V$)	: output ON
open	($4V \leqq V_{ON/OFF} \leqq 18V$)	: output OFF

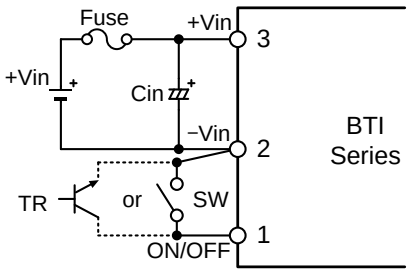

Connection example of ON/OFF pin

Note 1) When not using the ON / OFF function, short-circuit between the ON / OFF terminal and the -Vin terminal.

Note 2) The source current from ON / OFF pin to -Vin pin is 1mA or less.

Note 3) The maximum applied voltage to the ON / OFF pin is 18V.

Note 4) If the wiring from the ON / OFF pin to the -Vin pin is long, or if there is an effect of noise, connect a capacitor between the ON / OFF pin and the -Vin pin. The maximum capacitance value of the capacitor that can be connected between ON / OFF pin and -Vin pin is 1μF.

7-2 Variable output voltage (BTI-S (single output products) only)

By connecting a resistor between Vadj pin and + Vout pin or between Vadj pin and -Vout pin, the output voltage can be varied. If the output voltage is not variable, leave the Vadj pin open.

Output variable range: ± 10% of rated output voltage

7-2.1 Variable by external resistor and variable resistor

(1) When setting the output voltage low

When setting the output voltage to a low value, use it **<u>within the maximum output current</u>** of the specification standard value.

ie) in case of BTIxx-05S300D

Downloaded from Arrow.com.

The maximum output power when the 5V rating is set to 4.5V is 4.5V x 3.0A = 13.5W.

The output voltage can be lowered by connecting a resistor Rb between the variable output voltage pin (Vadj) and the positive output pin (+ Vout). The calculation formula at that time is as follows. (the unit of Rb is [kΩ]) Since the Vadj terminal has a relatively high impedance, connect it as short as possible so as not to be affected by noise.

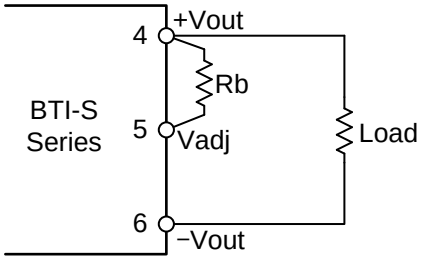

Basic connection for low output voltage setting

Output voltage: Vout[V], Connection resistance: Rb[kΩ]

BTIxx-03S400D

$$\mathrm{Vout(V)} = 3.3 - \frac{16.05}{22.8 + \mathrm{Rb(k\Omega)}}$$

$$\mathrm{Rb(k\Omega)} = \frac{16.05}{3.3 - \mathrm{Vout(V)}} - 22.8$$

However, the variable range is up to 2.97V.

BTIxx-05S300D

$$\mathrm{Vout(V)} = 5.01 - \frac{53.95}{32.3 + \mathrm{Rb(k\Omega)}}$$

$$\mathrm{Rb(k\Omega)} = \frac{53.95}{5.01 - \mathrm{Vout(V)}} - 32.3$$

However, the variable range is up to 4.5V.

BTIxx-12S130D

$$\mathrm{Vout(V)} = 12.05 - \frac{445.7}{63.1 + \mathrm{Rb(k\Omega)}}$$

$$\mathrm{Rb(k\Omega)} = \frac{445.7}{12.05 - \mathrm{Vout(V)}} - 63.1$$

However, the variable range is up to 10.8V.

Downloaded from Arrow.com.

BTIxx-15S100D

$$\mathrm{Vout(V)} = 15.08 - \frac{732.7}{74.7 + \mathrm{Rb(k\Omega)}}$$

$$\mathrm{Rb(k\Omega)} = \frac{732.7}{15.08 - \mathrm{Vout(V)}} - 74.7$$

However, the variable range is up to 13.5V.

(2) When setting the output voltage high

When setting the output voltage to a higher value, use it **within the maximum output power** specified in the specification. Note that increasing the output voltage beyond the variable range may damage the power supply.

ie) in case of BTIxx-05S300D
The maximum output current when the 5V rating is set to 5.5V is 15W ÷ 5.5V = 2.72A.

The output voltage can be lowered by connecting a resistor Ra between the variable output voltage pin (Vadj) and the negative output pin (-Vout). The calculation formula at that time is as follows (the unit of Ra is [kΩ]). Since the Vadj pin has a relatively high impedance, connect it as short as possible so as not to be affected by noise.

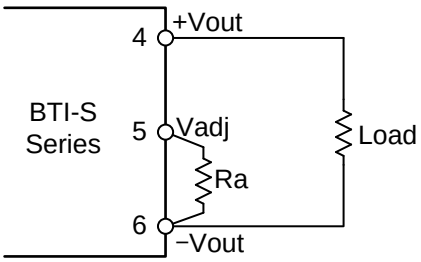

Basic connection for high output voltage setting

Output voltage: Vout[V], Connection resistance: Ra[kΩ]

BTIxx-03S400D

$$\mathrm{Vout(V)} = 3.3 + \frac{9.67}{15 + \mathrm{Ra(k\Omega)}}$$

$$\mathrm{Ra(k\Omega)} = \frac{9.67}{\mathrm{Vout(V)} - 3.3} - 15$$

However, the variable range is up to 3.63V.

BTIxx-05S300D

$$\mathrm{Vout(V)} = 5.01 + \frac{17.73}{18 + \mathrm{Ra(k\Omega)}}$$

$$\mathrm{Ra(k\Omega)} = \frac{17.73}{\mathrm{Vout(V)} - 5.01} - 18$$

However, the variable range is up to 5.5V.

Downloaded from Arrow.com.

BTIxx-12S130D

$$\mathrm{Vout(V)} = 12.05 + \frac{50.96}{22 + \mathrm{Ra(k\Omega)}}$$

$$\mathrm{Ra(k\Omega)} = \frac{50.96}{\mathrm{Vout(V)} - 12.05} - 22$$

However, the variable range is up to 13.2V.

BTIxx-15S100D

$$\mathrm{Vout(V)} = 15.08 + \frac{65.35}{22 + \mathrm{Ra(k\Omega)}}$$

$$\mathrm{Ra(k\Omega)} = \frac{65.35}{\mathrm{Vout(V)} - 15.08} - 22$$

However, the variable range is up to 16.5V.

7-3 Overcurrent protection (OCP)

Built-in OCP function. If the short-circuit condition or output current exceeds the OCP set value, intermittent operation will occur. The output is automatically restored by releasing the short-circuit state or setting the output current below the OCP set value. If the overcurrent condition continues, the power supply may be damaged depending on the heat dissipation conditions. Please be careful.

8 How to protect reverse connection of input power (example)

If the polarity of the input is incorrect, the power supply may be damaged. If there is a possibility of reverse connection, connect a protective diode (D1) and fuse (F1). Make sure that the withstand voltage of the protective diode is higher than the input voltage, and be sure to use a surge current that is larger than the fuse.

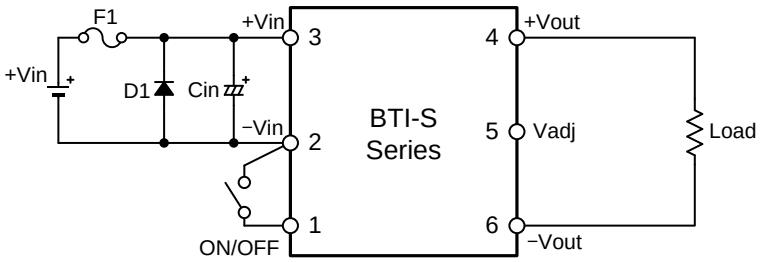

Reverse connection prevention circuit

Downloaded from Arrow.com.

9 Redundant operation method (example)

Redundant operation can be used for loads that can be supplied by a single unit. When one unit shuts down due to power failure, etc., it is possible to continue supplying power with the other unit that is still operating.

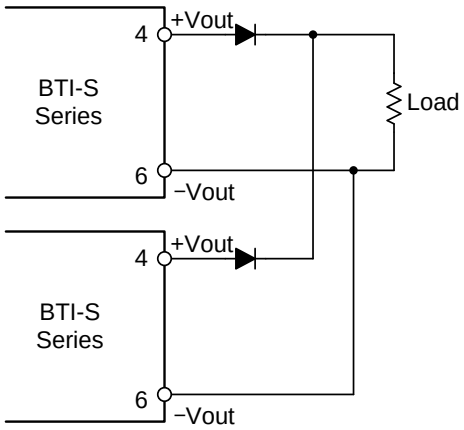

Redundant operation connection method (BTI-S)

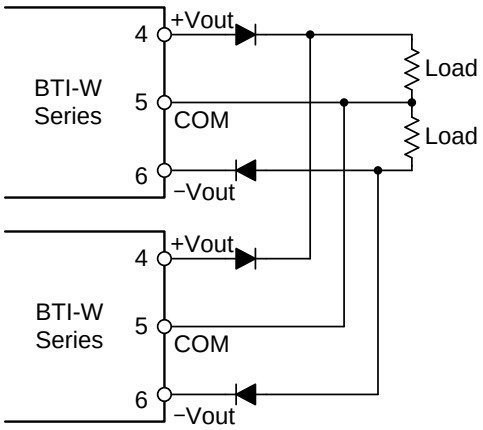

Redundant operation connection method (BTI-W)

10 Parallel operation

Parallel operation is not possible.

11 Series operation method (example)

Series operation is possible by wiring this product as shown below. Make sure that the output current is below the rated current of the power supply connected in series, whichever is smaller, so that current exceeding the rating does not flow inside the power supply.

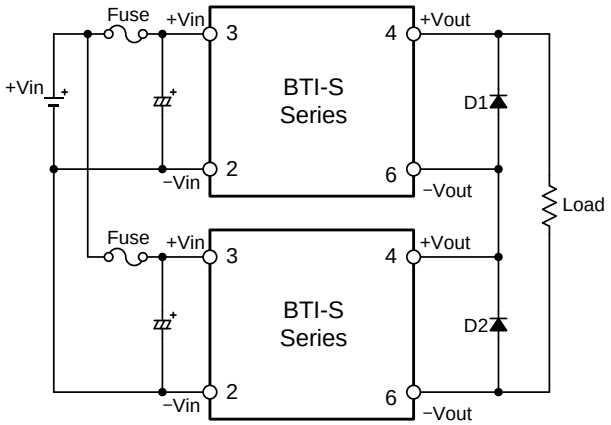

Series operation when output voltage stacked

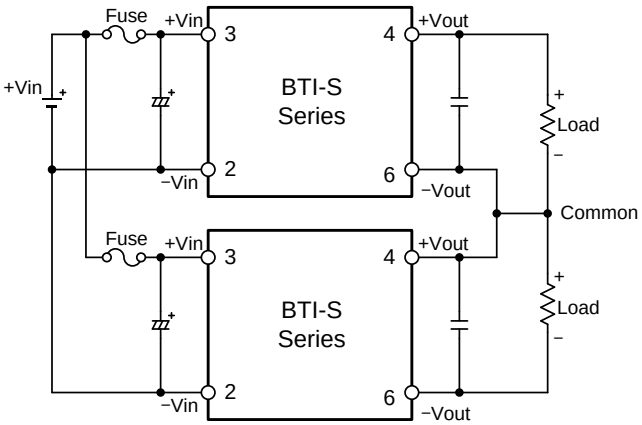

Series operation when used ± output

Downloaded from Arrow.com.

<Reference>

The BTI-W Series (dual output product) can be used as a 24V or 30V single output by connecting +Vout and -Vout to the load.

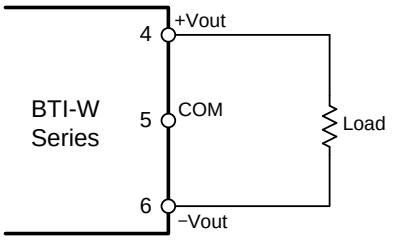

Connection when using BTI-W Series (dual output product) with single output

12 Between input and output capacitor capacity

A capacitor is built in between the input and output of this product.

Between input and output capacitor capacity: 1000pF

The higher the AC voltage between the input and output and the higher the frequency, the greater the loss of the built-in capacitor, which may damage the power supply.

Please contact us when using in applications where the voltage between input and output changes abruptly, or when connecting a high-frequency pulsed load on the output side.

13 Mounting (recommended soldering condition)

Please perform soldering within the following conditions.

(1) Soldering Dip

Dip condition: 260ºC, 10 sec.

Preheat condition: 110ºC, less than 30 to 40 sec.

(2) Soldering iron

350ºC, within 3 sec.

Note) The soldering time varies depending on the soldering iron capacity and board pattern to be used. Please check with the actual machine.

14 Vibration / Shock test

Vibration: 10 to 55Hz, Sweep time 3 mins, All Amplitude 1.52mmp-p (1 hr. each for 3 directions)

Shock test: Acceleration 490.3m/s^2

15 Cleaning condition

This product cannot be washed whole. Clean the solder surface with a brush with isopropyl alcohol (IPA) so that the cleaning solution does not penetrate inside the power supply. In addition, please use after the cleaning liquid is sufficiently dried.

Downloaded from Arrow.com.

16 Precautions

When using this product, please refer to the specifications to ensure your safety and be sure to observe the following precautions.

- This product intends to be used for general electronic equipment (Clerical work machines, Telecommunications equipment, and Measurement equipment). Therefore, do not use for medical equipment, nuclear power equipment, and trains, etc. the malfunction and damage of which may influence directly to human life and property. Please confirm when using it in the case except general electronic equipment.
- This product may be subject to minor changes or component changes within a range that does not significantly affect the specifications without prior notice due to improved characteristics and other reasons.
- For this product, parallel operation is not possible.
- For mounting this product, please do not use connector or socket. The performance may not be fulfilled by the effect of contacting resistor. Please mount to PCB by soldering.
- Although this product has a built-in overcurrent protection circuit, avoid overcurrent and short-circuit conditions for a long time (30 seconds or more) as they can cause failure.
- The product may be damaged if it is used under nonstandard electric and environmental conditions such as temperature. Please be sure to keep the standards.
- Do not store in a place where corrodible gas may be generated or at a dusty place.
- There is a possibility of damage by static. When the worker has electrified static, please earth discharge and working on an earthed worktable will be recommended.
- This product does not have a built-in fuse. Connect a fuse to the + input line as a protection when an excessive current flow to the input during abnormal conditions. Make sure that the power supply has enough capacity to cut the fuse.
- If the input ripple voltage exceeds 2Vp-p, the output ripple voltage may increase. Also note that output voltage may fluctuate transiently due to steep changes in input voltage. Use a stabilized input voltage as the input source.
- This product does not have a built in over voltage protection.
- No test certificate is attached to this product.

Downloaded from Arrow.com.

17 Guarantee

This product shall be guaranteed for 1 year. During this period, if there should be any failure definitely due to our designing or manufacturing workmanship, we will repair or replace it with new one at our own expense. But in case that it should be modified and/or made internal remodeling by buyer itself whatsoever, we cannot guarantee it. The warranty range of this product is the range of the product concerned.

18 Others

If any doubt arises in this specification, it will be decided after consultation between the two parties.

Downloaded from Arrow.com.