DRAWING MADE IN THIRD ANGLE PROJECTION

THIS DRAWING IS UNPUBLISHED. RELEASED FOR PUBLICATION ,19 .
© COPYRIGHT 19 BY AMP INCORPORATED, HARRISBURG, PA. ALL INTERNATIONAL RIGHTS RESERVED. AMP PRODUCTS MAY BE COVERED BY U.S. AND FOREIGN PATENTS AND/OR PATENTS PENDING.

MOD	LOC	DIST
30	AD	39

P	F	ZONE	LTR	DESCRIPTION		DATE	APPROVED
			E	REVISED AND REDRAWN ECN 893		-	
			F	REVISED ECN 950	LM	2-7-86	JLG
			F1	REVISED ECN 1041		5-1-86	-
			F2	OBSOLETED ECN 1821	LDR	2-22-88	JLG
			G	REV ECN AR2029 AR2120	DK	9-27-88	JLG
			H	REV PER ECN AR2491	JPG	6-8-89	-
✓	✓		J	REV LOC & DIST AD-4171		3-90	BF

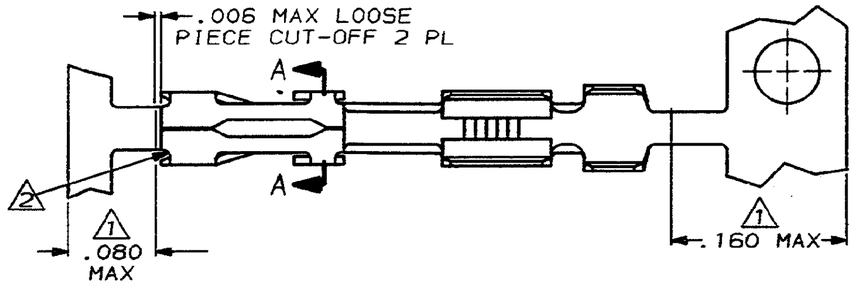

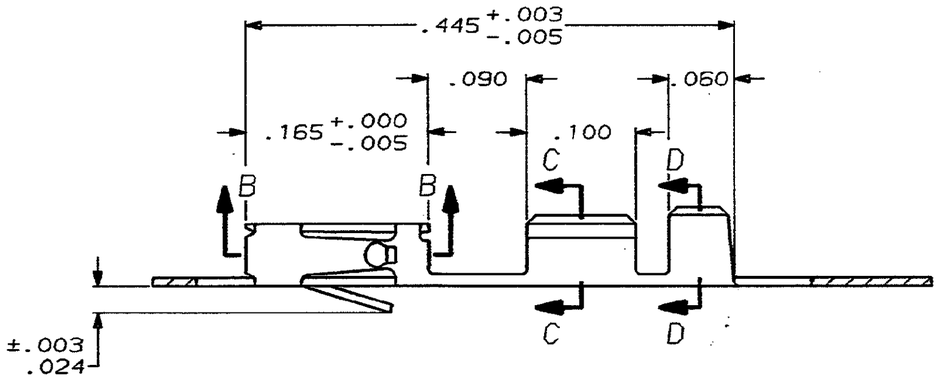

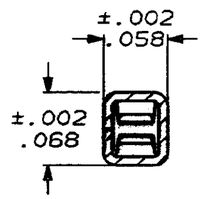

SECTION A-A

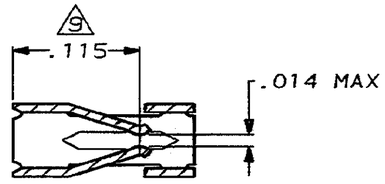

SECTION B-B

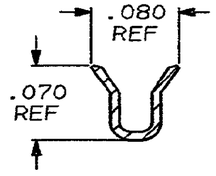

WIRE SIZE #26-#30

SECTION C-C

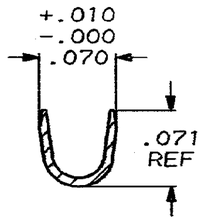

INSULATION RANGE .048 MAX

SECTION D-D

1. GOLD PLATING IS NOT REQUIRED IN THIS AREA.
2. CUT-OUTS ON THE BOX ARE AT MANUFACTURERS OPTION.
3. THIS TERMINAL IS REELED FOR THE STANDARD APPLICATOR.
4. THIS TERMINAL IS REELED FOR THE MINI APPLICATOR.
5. .000015 GOLD ON THE CONTACT AREA, GOLD FLASH ON THE REMAINDER ALL OVER .000050 NICKEL.
6. .000030 GOLD OVER .000050 NICKEL.
7. .000030 GOLD ON THE CONTACT AREA, GOLD FLASH ON THE REMAINDER ALL OVER .000050 NICKEL.
8. .000100-.000200 BRIGHT TIN-LEAD OVER .000050 NICKEL.
9. POINT OF MEASUREMENT FOR PLATING THICKNESS (INSIDE BEAMS).
10. OBSOLETED PART NUMBER.

4	8	10 -4	1- 10 -1
3	8	10 -4	1- 10 -0
4	7	87045-3	86491-6
4	6	87045-2	86491-4
3	6	87045-2	10 -3
4	5	87045-1	86491-2
3	5	87045-1	10 -1
REMARKS	FINISH	LOOSE PIECE PART NUMBER	PART NUMBER

UNLESS OTHERWISE SPECIFIED DIMENSIONS ARE IN INCHES
TOLERANCES ON :
2 PL DEC ±-
3 PL DEC ± .005
ANGLES ±-

MATERIAL: BERYLLIUM COPPER, .008 THICK

FINISH: SEE TABLE

DR 12-10-85 L.D.RINGLEY
CHK 12-16-85 J.L.GESFORD
APPD 12-16-85 J.L.GESFORD
APPD 12-16-85 CLIFFORD LINDGREN
PRODUCT SPEC 108-25,021
APPLICATION SPEC 114-25,003
WEIGHT -

AMP | AMP INCORPORATED Harrisburg, Pa. 17105

NAME
CONTACT, MOD IV 1/2, RECEPTACLE, CRIMP SNAP-IN

SIZE	FSCM NO	DRAWING NO
C	00779	86491

SCALE NTS SHEET 1 - 1

86491

AMP 1471-7 REV 10-84

CUSTOMER DRAWING

Downloaded from Arrow.com.